BIDDING REQUIREMENTS, CONTRACT FORMS,
CONTRACT CONDITIONS AND SPECIFICATIONS FOR

VILLAGE OF OSWEGO, ILLINOIS

2019 THE RESERVE AT HUDSON CROSSING – ROADWAY IMPROVEMENTS

Issued for Bidding
February 21, 2019

VILLAGE PRESIDENT – GAIL JOHNSON

VILLAGE BOARD OF TRUSTEES

RYAN KAUFFMAN	**LUIS PEREZ**
KARIN McCARTHY-LANGE	**JUDY SOLINGER**
PAM PARR	**JOE WEST**

VILLAGE ADMINISTRATOR – DANIEL DI SANTO
ASSISTANT VILLAGE ADMINISTRATOR / HUMAN RESOURCE DIRECTOR – CHRISTINA BURNS
DIRECTOR OF PUBLIC WORKS – JENNIFER HUGHES
CHIEF OF POLICE – JEFF BURGNER
BUILDING AND ZONING MANAGER – JAY HOOVER
COMMUNITY DEVELOPMENT DIRECTOR – ROD ZENNER
ECONOMIC DEVELOPMENT DIRECTOR – CORINNA COLE
FINANCE DIRECTOR– MARK HORTON
VILLAGE CLERK – TINA TOUCHETTE

I hereby certify that this engineering document was prepared by me or under my direct personal supervision and that I am a duly licensed Professional Engineer under the laws of the State of Illinois.

Terry M. Heitkamp, P.E.
Illinois Registered Professional Engineer
No. 062-058718
Expires November 30, 2019

Date
Trotter & Associates, Inc.
No. 184-002148

RETURN WITH BID

Illinois Department of Transportation

Local Public Agency Formal Contract Proposal

PROPOSAL SUBMITTED BY		
Contractor's Name		
Street		P.O. Box
City	State	Zip Code

STATE OF ILLINOIS

COUNTY OF Kendall

Village of Oswego

(Name of City, Village, Town or Road District)

FOR THE IMPROVEMENT OF

STREET NAME OR ROUTE NO. Various

SECTION NO. 18-00053-00-FP

TYPES OF FUNDS Local

☒ SPECIFICATIONS (required) ☒ PLANS (required)

For Municipal Projects

Submitted/Approved/Passed

☐ Mayor ☐ President of Board of Trustees ☒ Municipal Official

Date

Department of Transportation

☐ Released for bid based on limited review

Regional Engineer

Date

For County and Road District Projects

Submitted/Approved

Highway Commissioner

Date

Submitted/Approved

County Engineer/Superintendent of Highways

Date

Note: All proposal documents, including Proposal Guaranty Checks or Proposal Bid Bonds, should be stapled together to prevent loss when bids are processed.

RETURN WITH BID

NOTICE TO BIDDERS

County: Kendall
Local Public Agency: Village of Oswego
Section Number: 18-00053-00-FP
Route: Various

Sealed proposals for the improvement described below will be received at the office of Village of Oswego
100 Parkers Mill, Oswego, IL 60543 (Address) until 10:00 am (Time) on March 5, 2019 (Date)

Sealed proposals will be opened and read publicly at the office of Village of Oswego
100 Parkers Mill, Oswego, IL 60543 (Address) at 10:00 am (Time) on March 5, 2019 (Date)

DESCRIPTION OF WORK

Name: The Reserve at Hudson Crossing – Roadway Improvements Length: N/A feet (N/A miles)

Location: The project is located in near 59 S. Adams Street in the Village of Oswego, Kendall County, Illinois, as shown on the Project Location Map. The total area of improvement is approximately 153,680 square feet or 3.528 acres. The project is contained within W. Washington Street to W. Jefferson Street (South to North) and S. Harrison Street to S. Adams Street (West to East).

Proposed Improvement: The project includes grading, roadway modifications, water main/services, sanitary main/services and storm sewer construction. The project supports the construction of an apartment complex constructed near 59 S. Adams Street.

1. Plans and proposal forms will be available online at http://www.oswegoil.org

   The link can be found under the Business & Development Tab-Bids & RFPs
   http://www.oswegoil.org/business-and-development/bids-and-rfps.aspx

2. ☒ Prequalification

   If checked, the 2 low bidders must file within 24 hours after the letting an "Affidavit of Availability" (Form BC 57), in duplicate, showing all uncompleted contracts awarded to them and all low bids pending award for Federal, State, County, Municipal and private work. One original shall be filed with the Awarding Authority and one original with the IDOT District Office.

3. The Awarding Authority reserves the right to waive technicalities and to reject any or all proposals as provided in BLRS Special Provision for Bidding Requirements and Conditions for Contract Proposals.

4. The following BLR Forms shall be returned by the bidder to the Awarding Authority:
   a. BLR 12200: Local Public Agency Formal Contract Proposal
   b. BLR 12200a Schedule of Prices
   c. BLR 12230: Proposal Bid Bond (if applicable)
   d. BLR 12325: Apprenticeship or Training Program Certification (**do not use for federally funded projects**)
   e. BLR 12326: Affidavit of Illinois Business Office

5. The quantities appearing in the bid schedule are approximate and are prepared for the comparison of bids. Payment to the Contractor will be made only for the actual quantities of work performed and accepted or materials furnished according to the contract. The scheduled quantities of work to be done and materials to be furnished may be increased, decreased or omitted as hereinafter provided.
6. Submission of a bid shall be conclusive assurance and warranty the bidder has examined the plans and understands all requirements for the performance of work. The bidder will be responsible for all errors in the proposal resulting from failure or neglect to conduct an in depth examination. The Awarding Authority will, in no case be responsible for any costs, expenses, losses or changes in anticipated profits resulting from such failure or neglect of the bidder.
7. The bidder shall take no advantage of any error or omission in the proposal and advertised contract.
8. If a special envelope is supplied by the Awarding Authority, each proposal should be submitted in that envelope furnished by the Awarding Agency and the blank spaces on the envelope shall be filled in correctly to clearly indicate its contents. When an envelope other than the special one furnished by the Awarding Authority is used, it shall be marked to clearly indicate its contents. When sent by mail, the sealed proposal shall be addressed to the Awarding Authority at the address and in care of the official in whose office the bids are to be received. All proposals shall be filed prior to the time and at the place specified in the Notice to Bidders. Proposals received after the time specified will be returned to the bidder unopened.
9. Permission will be given to a bidder to withdraw a proposal if the bidder makes the request in writing or in person before the time for opening proposals.

RETURN WITH BID

PROPOSAL

County Kendall
Local Public Agency Village of Oswego
Section Number 18-00053-00-FP
Route Various

1. Proposal of The Reserve at Hudson Crossing – Roadway Improvements

   for the improvement of the above section by the construction of an apartment complex in the place of two vacant lots as well as 4 existing homes (to be demolished). The project also includes roadway modifications, water main/services, sanitary main/services and storm sewer construction.

   a total distance of N/A feet, of which a distance of N/A feet, (N/A miles) are to be improved.

2. The plans for the proposed work are those prepared by Trotter and Associates, Inc. 40W201 Wasco Rd. Suite D St. Charles, IL 60175 and approved by the Department of Transportation on T.B.D.

3. The specifications referred to herein are those prepared by the Department of Transportation and designated as "Standard Specifications for Road and Bridge Construction" and the "Supplemental Specifications and Recurring Special Provisions" thereto, adopted and in effect on the date of invitation for bids.

4. The undersigned agrees to accept, as part of the contract, the applicable Special Provisions indicated on the "Check Sheet for Recurring Special Provisions" contained in this proposal.

5. The undersigned agrees to complete the work within _____ working days or by November 15, 2019 unless additional time is granted in accordance with the specifications.

6. A proposal guaranty in the proper amount, as specified in BLRS Special Provision for Bidding Requirements and Conditions for Contract Proposals, will be required. Bid Bonds will be allowed as a proposal guaranty. Accompanying this proposal is either a bid bond if allowed, on Department form BLR 12230 or a proposal guaranty check, complying with the specifications, made payable to:

   _____ Treasurer of _____

   The amount of the check is _____ (_____).

7. In the event that one proposal guaranty check is intended to cover two or more proposals, the amount must be equal to the sum of the proposal guaranties, which would be required for each individual proposal. If the proposal guaranty check is placed in another proposal, it will be found in the proposal for: Section Number 18-00053-00-FP.

8. The successful bidder at the time of execution of the contract will be required to deposit a contract bond for the full amount of the award. When a contract bond is not required, the proposal guaranty check will be held in lieu thereof. If this proposal is accepted and the undersigned fails to execute a contract and contract bond as required, it is hereby agreed that the Bid Bond or check shall be forfeited to the Awarding Authority.

9. Each pay item should have a unit price and a total price. If no total price is shown or if there is a discrepancy between the product of the unit price multiplied by the quantity, the unit price shall govern. If a unit price is omitted, the total price will be divided by the quantity in order to establish a unit price.

10. A bid will be declared unacceptable if neither a unit price nor a total price is shown.

11. The undersigned submits herewith the schedule of prices on BLR 12200a covering the work to be performed under this contract.

12. The undersigned further agrees that if awarded the contract for the sections contained in the combinations on BLR 12200a, the work shall be in accordance with the requirements of each individual proposal for the multiple bid specified in the Schedule for Multiple Bids below.

RETURN WITH BID

Illinois Department of Transportation

SCHEDULE OF PRICES

County Kendall
Local Public Agency Village of Oswego
Section 18-00053-00-FP
Route N/A

Schedule for Multiple Bids

Combination Letter		Sections Included in Combinations	Total

Schedule for Single Bid

(For complete information covering these items, see plans and specifications)

Bidder's Proposal for making Entire Improvements				

SP	Item No.	Items	Unit	Quantity	Unit Price	Total
		DEMOLITION / REMOVAL / ABANDONMENT				
	20100110	TREE REMOVAL (6 TO 15 UNITS DIAMETER)	UNIT	197		
	20100210	TREE REMOVAL (OVER 15 UNITS DIAMETER)	UNIT	344		
	44000100	PAVEMENT REMOVAL	SQ YD	7,055		
	44000200	DRIVEWAY PAVEMENT REMOVAL	SQ YD	81		
	44000300	CURB REMOVAL	FOOT	31		
	44000500	COMBINATION CURB AND GUTTER REMOVAL	FOOT	1,997		
	44000600	SIDEWALK REMOVAL	SQ FT	5,559		
	55100300	STORM SEWER REMOVAL 8"	FOOT	58		
	55100500	STORM SEWER REMOVAL 12"	FOOT	604		
	55100700	STORM SEWER REMOVAL 15"	FOOT	370		
	55101200	STORM SEWER REMOVAL 24"	FOOT	37		
	60500040	REMOVING MANHOLES	EACH	3		
	60500050	REMOVING CATCH BASINS	EACH	7		
	60500060	REMOVING INLETS	EACH	2		
	72400100	REMOVE SIGN PANEL ASSEMBLY - TYPE A	EACH	12		
*	X0120014	WATER MAIN ABANDONMENT	EACH	3		
*	X0322936	REMOVE EXISTING FLARED END SECTION	EACH	3		
*	X0326864	BRICK SIDEWALK REMOVAL	SQ FT	2,635		
*	X0840000	SANITARY SEWER REMOVAL 8"	FOOT	343		
*	X6026622	VALVE VAULTS TO BE REMOVED	EACH	5		
*	Z0022800	FENCE REMOVAL	FOOT	266		
*		FIRE HYDRANT TO BE REMOVED	EACH	3		
*		REMOVE AND RELOCATE SIGN	EACH	4		
*		ABANDON AND FILL EXISTING STORM SEWER	FOOT	45		
		EARTHWORK				
	20200100	EARTH EXCAVATION	CU YD	2,042		
	20201200	REMOVAL AND DISPOSAL OF UNSUITABLE MATERIAL	CU YD	3,012		
	20400800	FURNISHED EXCAVATION	CU YD	4,336		
	20700220	POROUS GRANULAR EMBANKMENT	CU YD	6,900		
*	21001000	GEOTECHNICAL FABRIC FOR GROUND STABILIZATION	SQ YD	7,491		
	21301048	EXPLORATION TRENCH 48" DEPTH	FOOT	100		
		ROADWAY				
	35101500	AGGREGATE BASE COURSE, TYPE B	CU YD	1,103		
	35501308	HOT-MIX ASPHALT BASE COURSE, 6"	SQ YD	6,391		
	40600275	BITUMINOUS MATERIALS (PRIME COAT)	POUND	14,380		
	40600290	BITUMINOUS MATERIALS (TACK COAT)	POUND	2,876		
	40603085	HOT-MIX ASPHALT BINDER COURSE, IL-19.0, N50	TON	1,432		
	40603340	HOT-MIX ASPHALT SURFACE COURSE, MIX "D", N50	TON	895		
	42000201	PORTLAND CEMENT CONCRETE PAVEMENT 7" (JOINTED)	SQ YD	228		
	42300400	PORTLAND CEMENT CONCRETE DRIVEWAY PAVEMENT, 8 INCH	SQ YD	74		
	42400200	PORTLAND CEMENT CONCRETE SIDEWALK 5 INCH	SQ FT	19,768		
	42400800	DETECTABLE WARNINGS	SQ FT	308		
	60603800	COMBINATION CONCRETE CURB AND GUTTER, TYPE B-6.12	FOOT	4,030		
	60605000	COMBINATION CONCRETE CURB AND GUTTER, TYPE B-6.24	FOOT	189		
	72000100	SIGN PANEL - TYPE 1	SQ FT	60		
	72800100	TELESCOPING STEEL SIGN SUPPORT	FOOT	150		
	78008200	POLYUREA PAVEMENT MARKING TYPE I - LETTERS AND SYMBOLS	SQ FT	86		
	78008210	POLYUREA PAVEMENT MARKING TYPE I - LINE 4"	FOOT	2,689		

RETURN WITH BID

	Bidder's Proposal for making Entire Improvements					

SP	Item No.	Items	Unit	Quantity	Unit Price	Total
	78008270	POLYUREA PAVEMENT MARKING TYPE I - LINE 24"	FOOT	91		
*	X0326863	BRICK SIDEWALK	SQ FT	4,003		
*	Z0004510	HOT-MIX ASPHALT DRIVEWAY PAVEMENT, 3"	SQ YD	87		
*		REINSTALL SALVAGED BRICK SIDEWALK	SQ FT	415		
*		BRICK PAVEMENT	SQ YD	191		
*		CLASS D PATCH, SPECIAL, 3"	SQ YD	532		
*		CLASS D PATCH, SPECIAL, 12.5"	SQ YD	204		
*		HOT-MIX ASPHALT BIKE PATH	SQ YD	91		
*		DECORATIVE SIGN POLE	FOOT	24		
		SANITARY SEWER				
*		SANITARY MANHOLE, TYPE A, 4' DIAMETER, TYPE 1 FRAME, CLOSED LID	EACH	13		
*		SANITARY MANHOLE, TYPE C, 4' DIAMETER, TYPE 1 FRAME, CLOSED LID	EACH	1		
*		SANITARY SEWER, PVC, SDR-26, 8"	FOOT	42		
*		SANITARY SEWER, PVC, SDR-26, 10"	FOOT	662		
*		SANITARY SEWER, PVC, SDR-26, 12"	FOOT	1,348		
*		STEEL CASING, JACK AND BORE, 30"	FOOT	105		
*		GREASE INTERCEPTOR - 1,500 GALLON	EACH	1		
*		SANITARY SERVICE, PVC, 6"	FOOT	92		
		STORM SEWER				
	54213657	PRECAST REINFORCED CONCRETE FLARED END SECTIONS 12"	EACH	1		
	54213663	PRECAST REINFORCED CONCRETE FLARED END SECTIONS 18"	EACH	1		
	54213669	PRECAST REINFORCED CONCRETE FLARED END SECTIONS 24"	EACH	1		
	60200205	CATCH BASINS, TYPE A, 4'-DIAMETER, TYPE 1 FRAME, CLOSED LID	EACH	2		
	60200805	CATCH BASINS, TYPE A, 4'-DIAMETER, TYPE 8 GRATE	EACH	2		
	60201005	CATCH BASINS, TYPE A, 4'-DIAMETER, TYPE 10 FRAME AND GRATE	EACH	4		
	60201105	CATCH BASINS, TYPE A, 4'-DIAMETER, TYPE 11 FRAME AND GRATE	EACH	9		
	60207605	CATCH BASINS, TYPE C, TYPE 8 GRATE	EACH	1		
	60207805	CATCH BASINS, TYPE C, TYPE 10 FRAME AND GRATE	EACH	4		
	60207905	CATCH BASINS, TYPE C, TYPE 11 FRAME AND GRATE	EACH	5		
	60218400	MANHOLES, TYPE A, 4'-DIAMETER, TYPE 1 FRAME, CLOSED LID	EACH	6		
	550A0050	STORM SEWERS, CLASS A, TYPE 1 12"	FOOT	190		
	550A0070	STORM SEWERS, CLASS A, TYPE 1 15"	FOOT	68		
	550A0340	STORM SEWERS, CLASS A, TYPE 2 12"	FOOT	655		
	550A0360	STORM SEWERS, CLASS A, TYPE 2 15"	FOOT	121		
	550A0380	STORM SEWERS, CLASS A, TYPE 2 18"	FOOT	196		
	550A0400	STORM SEWERS, CLASS A, TYPE 2 21"	FOOT	191		
	550A0410	STORM SEWERS, CLASS A, TYPE 2 24"	FOOT	153		
	550B0340	STORM SEWERS, CLASS B, TYPE 2 12"	FOOT	18		
*		TRENCH DRAIN - PATIO	FOOT	42		
*		TRENCH DRAIN - PAVEMENT	FOOT	20		
		WATER MAIN				
*	X5630706	CONNECTION TO EXISTING WATER MAIN 6"	EACH	1		
*	X5630710	CONNECTION TO EXISTING WATER MAIN 10"	EACH	2		
*	X5640175	FIRE HYDRANT COMPLETE	EACH	7		
*	Z0067700	STEEL CASINGS 20"	FOOT	196		
*	Z0067900	STEEL CASINGS 30"	FOOT	21		
*		WATER MAIN, 8", DUCTILE IRON	FOOT	320		
*		WATER MAIN, 10", DUCTILE IRON	FOOT	1,520		
*		ADJUSTING WATER MAIN, SPECIAL, 12"	FOOT	36		
*		WATER SERVICE LINE, SPECIAL, 1"	FOOT	90		
*		VALVE VAULT, TYPE A, 5'-DIAMETER, TYPE 1 FRAME, CLOSED LID, 8" GATE VALVE	EACH	1		
*		VALVE VAULT, TYPE A, 5'-DIAMETER, TYPE 1 FRAME, CLOSED LID, 10" GATE VALVE	EACH	6		
*		VALVE VAULT, TYPE A, 5'-DIAMETER, TYPE 1 FRAME, CLOSED LID, 12" GATE VALVE	EACH	1		
*		VALVE BOX, 10" GATE VALVE	EACH	2		
		UNDERGROUND ELECTRIC				
*		PRECAST CONCRETE TRANSFORMER PAD	EACH	2		
*		PRECAST CONCRETE SWITCHGEAR PAD	EACH	1		
*		ELECTRIC SPLICE BOX	EACH	1		
*		CONNECTION TO UTILITY POLE	EACH	5		
*		ELECTRIC CABLE IN CONDUIT, 500 CU - 400 AMP SECONDARY CABLE	FOOT	85		
*	81028390	UNDERGROUND CONDUIT, PVC, 4" DIA	FOOT	73		
*	81028410	UNDERGROUND CONDUIT, PVC, 6" DIA	FOOT	1,948		
		LIGHTING				
	20800150	TRENCH BACKFILL	CU YD	60		
	81028210	UNDERGROUND CONDUIT, GALVANIZED STEEL, 2 1/2" DIA.	FOOT	300		
	81028240	UNDERGROUND CONDUIT, GALVANIZED STEEL, 4" DIA.	FOOT	110		
	81028710	UNDERGROUND CONDUIT, COILABLE NONMETALLIC CONDUIT, 3/4" DIA.	FOOT	350		
	81028730	UNDERGROUND CONDUIT, COILABLE NONMETALLIC CONDUIT, 1 1/4" DIA.	FOOT	4,000		

RETURN WITH BID

	Bidder's Proposal for making Entire Improvements					

SP	Item No.	Items	Unit	Quantity	Unit Price	Total
	81028740	UNDERGROUND CONDUIT, COILABLE NONMETALLIC CONDUIT, 1 1/2" DIA.	FOOT	700		
	81028750	UNDERGROUND CONDUIT, COILABLE NONMETALLIC CONDUIT, 2" DIA.	FOOT	525		
	81028790	UNDERGROUND CONDUIT, COILABLE NONMETALLIC CONDUIT, 4" DIA.	FOOT	100		
	83600200	LIGHT POLE FOUNDATION, 24" DIAMETER	FOOT	350		
	84200500	REMOVAL OF LIGHTING UNIT, SALVAGE	EACH	17		
	84200804	REMOVAL OF POLE FOUNDATION	EACH	11		
*	84500110	REMOVAL OF LIGHTING CONTROLLER	EACH	1		
*	84500120	REMOVAL OF ELECTRIC SERVICE INSTALLATION	EACH	1		
*	84500130	REMOVAL OF LIGHTING CONTROLLER FOUNDATION	EACH	1		
*	89502380	REMOVE EXISTING HANDHOLE	EACH	1		
*	X0325815	REMOVE EXISTING CABLE	FOOT	1,000		
*	X1200139	REMOVAL OF LIGHTING LUMINAIRE, SALVAGE	EACH	2		
*	X8140230	HANDHOLE, COMPOSITE CONCRETE (SPECIAL)	EACH	10		
*	X8360215	LIGHT POLE FOUNDATION, 24" DIAMETER, OFFSET	FOOT	60		
*	XX008195	EXPLORATION EXCAVATION (UTILITY)	FOOT	120		
*	Z0033028	MAINTENANCE OF LIGHTING SYSTEM	CAL MO	9		
		RESTORATION				
	21101615	TOPSOIL FURNISH AND PLACE, 4"	SQ YD	3,829		
	25000110	SEEDING, CLASS 1A	ACRE	0.489		
	25000314	SEEDING, CLASS 4B	ACRE	0.304		
	25200110	SODDING, SALT TOLERANT	SQ YD	2,814		
		EROSION / SEDIMENT CONTROL				
	28000400	PERIMETER EROSION BARRIER	FOOT	1,787		
	28000510	INLET FILTERS	EACH	32		
	28001100	TEMPORARY EROSION CONTROL BLANKET	SQ YD	2,358		
		LANDSCAPING				
		TREE, ACER SACCHARUM 'CRESCENDO' (CRESCENDO SUGAR MAPLE), 3" CALIPER, BALLED AND BURLAPPED	EACH	2		
*		TREE, GINKGO BILOBA 'AUTUMN GOLD' (AUTUMN GOLD GINKGO), 3" CALIPER, BALLED AND BURLAPPED	EACH	4		
*		TREE, GYMNOCLADUS DIOICUS 'ESPRESSO' (ESPRESSO KENTUCKY COFFEE TREE), 4" CALIPER, BALLED AND BURLAPPED	EACH	2		
*		TREE, PLATANUS ACERIFOLIA 'MORTON CIRCLE' (EXCLAMATION LONDON PLANETREE), 3" CALIPER, TREE FORM, BALLED AND BURLAPPED	EACH	3		
*		TREE, TILIA CORDATA 'GREENSPIRE' (GREENSPIRE LINDEN), 3" CALIPER, BALLED AND BURLAPPED	EACH	2		
*		TREE, HEPTACODIUM MICNOIDES (SEVEN SON FLOWER), 8' HEIGHT, CLUMP FORM, BALLED AND BURLAPPED	EACH	4		
*		TREE, OSTRYA VIRGINIANA (AMERICAN HOPHORNBEAM), 3" CALIPER, BALLED AND BURLAPPED	EACH	5		
*		EVERGREEN, TAXUS X MEDIA 'TAUNTONII' (TAUNTON YEW), 24", BALLED AND BURLAPPED	EACH	21		
*		SHRUB, CORNUS STOLONIFERA 'ARCTIC FIRE' (ARCTIC FIRE DOGWOOD), CONTAINER GROWN, 7-GALLON	EACH	7		
*		SHRUB, DIERVILLA LONICERA (DWARF BUSH HONEY SUCKLE), 5-GALLON	EACH	30		
*		SHRUB, FOTHERGILLA GARDENII (DWARF FOTHERGILLA), 3-GALLON	EACH	5		
*		SHRUB, HYDRANGEA ARBORESCENS 'INCREDIBALL' (INCREDIBALL HYDRANGEA), 5-GALLON	EACH	21		
*		SHRUB, SYRINGA PATULA 'MISS KIM' (MISS KIM LILAC), 3' HEIGHT, BALLED AND BURLAPPED	EACH	7		
*		SHRUB, VIBURNUM PRUNIFOLIUM (BLACKHAW VIBURNUM), 5' HEIGHT, BALLED AND BURLAPPED	EACH	3		
*		SHRUB, VIBURNUM DENTATUM (ARROWWOOD VIBURNUM), 4' HEIGHT, BALLED AND BURLAPPED	EACH	15		
*		PERENNIAL PLANTS, ALLIUM 'SUMMER BEAUTY' (SUMMER BEAUTY ONION), 1-GALLON	EACH	51		
*		PERENNIAL PLANTS, CALAMAGROSTIS X ACUTIFLORA 'KARL FORESTER' (FEATHER REED GRASS), 3-GALLON	EACH	6		
*		PERENNIAL PLANTS, CHASMANTHIUM LATIFOLIUM (NORTHERN SEA OATS), 1-GALLON	EACH	83		
*		PERENNIAL PLANTS, CAREX MUSKINGUMENSIS 'OEHME' (OEHME PALM SEDGE), 1-GALLON	EACH	31		
*		PERENNIAL PLANTS, HEMEROCALIS 'HAPPY RETURNS' (HAPPY RETURNS DAYLILY), 1-GALLON	EACH	166		
*		PERENNIAL PLANTS, PANICUM VIRGATUM 'HEAVY METAL' (HEAVY METAL SWITCHGRASS), 3-GALLON	EACH	18		
*		PERENNIAL PLANTS, SESLERIA AUTUMNALIS (AUTUMN MORE GRASS), 1-GALLON	EACH	128		

RETURN WITH BID

Bidder's Proposal for making Entire Improvements				

SP	Item No.	Items	Unit	Quantity	Unit Price	Total
*		PERENNIAL PLANTS, SPOROBOLUS HETEROLEPIS (PRAIRIE DROPSEED), 1-GALLON	EACH	12		
*		MULCH PLACEMENT 3"	SQ YD	1,013		
		MISCELLANEOUS				
	50901760	PIPE HANDRAIL	FOOT	284		
	67100100	MOBILIZATION	L SUM	1		
*		REMOVE AND RESET MAILBOX	EACH	2		
*		STREET LIGHT TO BE PAINTED	EACH	4		
*		PORTLAND CEMENT CONCRETE STEPS	CU YD	5		
*		ORNAMENTAL FENCE	FOOT	112		
*		STONE FENCE COLUMN	EACH	4		
*		STONE ARCH COLUMN	EACH	2		
*		INTEGRAL BARRIER WALL AND SIDEWALK	SQ FT	686		
*		SEGMENTAL CONCRETE BLOCK RETAINING WALL	SQ FT	936		
*		BOLLARD	EACH	4		
*		TRAFFIC CONTROL AND PROTECTION, SPECIAL	L SUM	1		
		RAILROAD PROTECTIVE LIABILITY INSURANCE	L SUM	1		
		ALTERNATE 1 - LIGHTING CABLE AND FIXTURES				
	81702110	ELECTRIC CABLE IN CONDUIT, 600V (XLP-TYPE USE) 1/C NO. 10	FOOT	3,850		
	81702120	ELECTRIC CABLE IN CONDUIT, 600V (XLP-TYPE USE) 1/C NO. 8	FOOT	4,200		
	81702130	ELECTRIC CABLE IN CONDUIT, 600V (XLP-TYPE USE) 1/C NO. 6	FOOT	15,150		
	81702140	ELECTRIC CABLE IN CONDUIT, 600V (XLP-TYPE USE) 1/C NO. 4	FOOT	2,750		
	81702180	ELECTRIC CABLE IN CONDUIT, 600V (XLP-TYPE USE) 1/C NO. 3/0	FOOT	630		
	82500370	LIGHTING CONTROLLER, BASE MOUNTED, 240 VOLT, 200 AMP	EACH	2		
*	X0324058	OUTLET SPECIAL	EACH	3		
*	X0326498	GFCI 20 AMP DUPLEX RECEPTACLE	EACH	4		
*	X0327141	LIGHTING STANDARD, TYPE 1	EACH	29		
*	X0327142	LIGHTING STANDARD, TYPE 2	EACH	6		
*	X1400238	LUMINAIRE, LED, SPECIAL	EACH	37		
		ALTERNATE 2 - HUDSON CROSSING PARK				
*	Z0022800	FENCE REMOVAL	FOOT	103		
*		COLUMN REMOVAL	EACH	8		
	42400800	DETECTABLE WARNINGS	SQ FT	156		
*	X0326864	BRICK SIDEWALK (PARK)	SQ FT	3,980		
*		REINSTALL SALVAGED BRICK SIDEWALK	SQ FT	824		
*	84400105	RELOCATE EXISTING LIGHTING UNIT	EACH	3		
*		TREE, TAXODIUM DISTICHUM (BALD CYPRESS), 4" CALIPER, BALLED AND BURLAPPED	EACH	2		
*		TREE, CERCIDIPHYLLYM JAPONICUM (KATSURA TREE), 3" CALIPER, BALLED AND BURLAPPED	EACH	4		
*		SHRUB, ILEX GLABRA 'SHAMROCK (SHAMROCK INKBERRY), 18" HEIGHT, BALLED AND BURLAPPED	EACH	8		
*		MULCH PLACEMENT 3"	SQ YD	37		
	50901760	PIPE HANDRAIL	FOOT	188		
*		ORNAMENTAL FENCE	FOOT	112		
*		STONE FENCE COLUMN	EACH	4		
*		STONE ARCH COLUMN	EACH	2		
*		INTEGRAL BARRIER WALL AND SIDEWALK	SQ FT	686		
*		SEGMENTAL CONCRETE BLOCK RETAINING WALL	SQ FT	158		

CONTRACTOR CERTIFICATIONS

County Kendall
Local Public Agency Village of Oswego
Section Number 18-00053-00-FP
Route Various

The certifications hereinafter made by the bidder are each a material representation of fact upon which reliance is placed should the Department enter into the contract with the bidder.

1. **Debt Delinquency.** The bidder or contractor or subcontractor, respectively, certifies that it is not delinquent in the payment of any tax administered by the Department of Revenue unless the individual or other entity is contesting, in accordance with the procedures established by the appropriate revenue Act, its liability for the tax or the amount of tax. Making a false statement voids the contract and allows the Department to recover all amounts paid to the individual or entity under the contract in a civil action.

2. **Bid-Rigging or Bid Rotating.** The bidder or contractor or subcontractor, respectively, certifies that it is not barred from contracting with the Department by reason of a violation of either 720 ILCS 5/33E-3 or 720 ILCS 5/33E-4.

   A violation of Section 33E-3 would be represented by a conviction of the crime of bid-rigging which, in addition to Class 3 felony sentencing, provides that any person convicted of this offense or any similar offense of any state or the United States which contains the same elements as this offense shall be barred for 5 years from the date of conviction from contracting with any unit of State or local government. No corporation shall be barred from contracting with any unit of State or local government as a result of a conviction under this Section of any employee or agent of such corporation if the employee so convicted is no longer employed by the corporation and: (1) it has been finally adjudicated not guilty or (2) if it demonstrates to the governmental entity with which it seeks to contract and that entity finds that the commission of the offense was neither authorized, requested, commanded, nor performed by a director, officer or a high managerial agent in behalf of the corporation.

   A violation of Section 33E-4 would be represented by a conviction of the crime of bid-rotating which, in addition to Class 2 felony sentencing, provides that any person convicted of this offense or any similar offense of any state or the United States which contains the same elements as this offense shall be permanently barred from contracting with any unit of State or local government. No corporation shall be barred from contracting with any unit of State or local government as a result of a conviction under this Section of any employee or agent of such corporation if the employee so convicted is no longer employed by the corporation and: (1) it has been finally adjudicated not guilty or (2) if it demonstrates to the governmental entity with which it seeks to contract and that entity finds that the commission of the offense was neither authorized, requested, commanded, nor performed by a director, officer or a high managerial agent in behalf of the corporation.

3. **Bribery.** The bidder or contractor or subcontractor, respectively, certifies that it has not been convicted of bribery or attempting to bribe an officer or employee of the State of Illinois or any unit of local government, nor has the firm made an admission of guilt of such conduct which is a matter of record, nor has an official, agent, or employee of the firm committed bribery or attempted bribery on behalf of the firm and pursuant to the direction or authorization of a responsible official of the firm.

4. **Interim Suspension or Suspension.** The bidder or contractor or subcontractor, respectively, certifies that it is not currently under a suspension as defined in Subpart I of Title 44 Subtitle A Chapter III Part 6 of the Illinois Administrative Code. Furthermore, if suspended prior to completion of this work, the contract or contracts executed for the completion of this work may be cancelled.

County Kendall
Local Public Agency Village of Oswego
Section Number 18-00053-00-FP
Route Various

SIGNATURES

(If an individual)

Signature of Bidder _____

Business Address _____

_____

(If a partnership)

Firm Name _____

Signed By _____

Business Address _____

_____

Inset Names and Addressed of All Partners

_____

_____

_____

_____

(If a corporation)

Corporate Name _____

Signed By _____
President

Business Address _____

_____

Insert Names of Officers

President _____

Secretary _____

Treasurer _____

Attest: _____
Secretary

INDEX
FOR
SUPPLEMENTAL SPECIFICATIONS
AND RECURRING SPECIAL PROVISIONS

Adopted January 1, 2018

This index contains a listing of SUPPLEMENTAL SPECIFICATIONS, frequently used RECURRING SPECIAL PROVISIONS, and LOCAL ROADS AND STREETS RECURRING SPECIAL PROVISIONS.

ERRATA Standard Specifications for Road and Bridge Construction
(Adopted 4-1-16) (Revised 1-1-18)

SUPPLEMENTAL SPECIFICATIONS

Std. Spec. Sec.		Page No.
106	Control of Materials	1
403	Bituminous Surface Treatment (Class A-1, A-2, A-3)	2
404	Micro-Surfacing and Slurry Sealing	3
405	Cape Seal	14
420	Portland Cement Concrete Pavement	24
442	Pavement Patching	26
502	Excavation for Structures	27
503	Concrete Structures	29
504	Precast Concrete Structures	32
542	Pipe Culverts	33
586	Sand Backfill for Vaulted Abutments	34
630	Steel Plate Beam Guardrail	36
631	Traffic Barrier Terminals	39
670	Engineer's Field Office and Laboratory	40
701	Work Zone Traffic Control and Protection	41
704	Temporary Concrete Barrier	42
781	Raised Reflective Pavement Markers	44
888	Pedestrian Push-Button	45
1003	Fine Aggregates	46
1004	Coarse Aggregates	47
1006	Metals	50
1020	Portland Cement Concrete	51
1050	Poured Joint Sealers	53
1069	Pole and Tower	55
1077	Post and Foundation	56
1096	Pavement Markers	57
1101	General Equipment	58
1102	Hot-Mix Asphalt Equipment	59
1103	Portland Cement Concrete Equipment	61
1106	Work Zone Traffic Control Devices	63

Check Sheet For Recurring Special Provisions

The Following Recurring Special Provisions Indicated By An “X” Are Applicable To This Contract And Are Included By Reference:

Recurring Special Provisions

Check Sheet #			Page No.
1	☐	Additional State Requirements for Federal-Aid Construction Contracts	64
2	☐	Subletting of Contracts (Federal-Aid Contracts)	67
3	☒	EEO	68
4	☒	Specific EEO Responsibilities Non Federal-Aid Contracts	78
5	☒	Required Provisions - State Contracts	83
6	☐	Asbestos Bearing Pad Removal	89
7	☐	Asbestos Waterproofing Membrane and Asbestos Hot-Mix Asphalt Surface Removal	90
8	☐	Temporary Stream Crossings and In-Stream Work Pads	91
9	☐	Construction Layout Stakes Except for Bridges	92
10	☐	Construction Layout Stakes	95
11	☐	Use of Geotextile Fabric for Railroad Crossing	98
12	☐	Subsealing of Concrete Pavements	100
13	☐	Hot-Mix Asphalt Surface Correction	104
14	☐	Pavement and Shoulder Resurfacing	106
15	☐	Patching with Hot-Mix Asphalt Overlay Removal	107
16	☐	Polymer Concrete	109
17	☐	PVC Pipeliner	111
18	☒	Bicycle Racks	112
19	☐	Temporary Portable Bridge Traffic Signals	114
20	☐	Work Zone Public Information Signs	116
21	☐	Nighttime Inspection of Roadway Lighting	117
22	☐	English Substitution of Metric Bolts	118
23	☐	Calcium Chloride Accelerator for Portland Cement Concrete	119
24	☒	Quality Control of Concrete Mixtures at the Plant	120
25	☒	Quality Control/Quality Assurance of Concrete Mixtures	128
26	☐	Digital Terrain Modeling for Earthwork Calculations	144
27	☐	Reserved	146
28	☐	Preventive Maintenance - Bituminous Surface Treatment	147
29	☐	Reserved	153
30	☐	Reserved	154
31	☐	Reserved	155
32	☐	Temporary Raised Pavement Markers	156
33	☐	Restoring Bridge Approach Pavements Using High-Density Foam	157
34	☐	Portland Cement Concrete Inlay or Overlay	160
35	☐	Portland Cement Concrete Partial Depth Hot-Mix Asphalt Patching	164

The Following Local Roads And Streets Recurring Special Provisions Indicated By An “X” Are Applicable To This Contract And Are Included By Reference:

Local Roads And Streets Recurring Special Provisions

Check Sheet #			Page No.
LRS 1		**Reserved**	168
LRS 2	☐	Furnished Excavation	169
LRS 3	☒	Work Zone Traffic Control Surveillance	170
LRS 4	☒	Flaggers in Work Zones	171
LRS 5	☒	Contract Claims	172
LRS 6	☒	Bidding Requirements and Conditions for Contract Proposals	173
LRS 7	☒	Bidding Requirements and Conditions for Material Proposals	179
LRS 8		**Reserved**	185
LRS 9	☒	Bituminous Surface Treatments	186
LRS 10		**Reserved**	187
LRS 11	☒	Employment Practices	188
LRS 12	☒	Wages of Employees on Public Works	190
LRS 13	☒	Selection of Labor	192
LRS 14	☒	Paving Brick and Concrete Paver Pavements and Sidewalks	193
LRS 15	☒	Partial Payments	196
LRS 16	☒	Protests on Local Lettings	197
LRS 17	☒	Substance Abuse Prevention Program	198
LRS 18	☐	Multigrade Cold Mix Asphalt	199

BDE SPECIAL PROVISIONS
For the November 9, 2018 Letting

The following special provisions indicated by a “check mark” are applicable to this contract and will be included by the Project Development and Implementation Section of the BD&E. An * indicates a new or revised special provision for the letting.

	File Name	#		Special Provision Title	Effective	Revised
	80099	1	☐	Accessible Pedestrian Signals (APS)	April 1, 2003	Jan. 1, 2014
	80382	2	☑	Adjusting Frames and Grates	April 1, 2017	
	80274	3	☐	Aggregate Subgrade Improvement	April 1, 2012	April 1, 2016
	80192	4	☐	Automated Flagger Assistance Device	Jan. 1, 2008	
	80173	5	☐	Bituminous Materials Cost Adjustments	Nov. 2, 2006	Aug. 1, 2017
	80241	6	☐	Bridge Demolition Debris	July 1, 2009	
	5026I	7	☐	Building Removal-Case I (Non-Friable and Friable Asbestos)	Sept. 1, 1990	April 1, 2010
	5048I	8	☐	Building Removal-Case II (Non-Friable Asbestos)	Sept. 1, 1990	April 1, 2010
	5049I	9	☐	Building Removal-Case III (Friable Asbestos)	Sept. 1, 1990	April 1, 2010
	5053I	10	☑	Building Removal-Case IV (No Asbestos)	Sept. 1, 1990	April 1, 2010
	80366	11	☑	Butt Joints	July 1, 2016	
	80386	12	☐	Calcium Aluminate Cement for Class PP-5 Concrete Patching	Nov. 1, 2017	
*	80396	13	☐	Class A and B Patching	Jan. 1, 2018	Nov. 1, 2018
	80384	14	☑	Compensable Delay Costs	June 2, 2017	
	80198	15	☐	Completion Date (via calendar days)	April 1, 2008	
	80199	16	☐	Completion Date (via calendar days) Plus Working Days	April 1, 2008	
	80293	17	☐	Concrete Box Culverts with Skews > 30 Degrees and Design Fills ≤ 5 Feet	April 1, 2012	July 1, 2016
	80311	18	☐	Concrete End Sections for Pipe Culverts	Jan. 1, 2013	April 1, 2016
	80277	19	☐	Concrete Mix Design – Department Provided	Jan. 1, 2012	April 1, 2016
	80261	20	☑	Construction Air Quality – Diesel Retrofit	June 1, 2010	Nov. 1, 2014
	80387	21	☐	Contrast Preformed Plastic Pavement Marking	Nov. 1, 2017	
	80029	22	☐	Disadvantaged Business Enterprise Participation	Sept. 1, 2000	April 2, 2018
*	80402	23	☑	Disposal Fees	Nov. 1, 2018	
	80378	24	☐	Dowel Bar Inserter	Jan. 1, 2017	Jan. 1, 2018
	80388	25	☑	Equipment Parking and Storage	Nov. 1, 2017	
	80229	26	☑	Fuel Cost Adjustment	April 1, 2009	Aug. 1, 2017
	80304	27	☐	Grooving for Recessed Pavement Markings	Nov. 1, 2012	Nov. 1, 2017
	80246	28	☑	Hot-Mix Asphalt – Density Testing of Longitudinal Joints	Jan. 1, 2010	Aug. 1, 2018
	80398	29	☐	Hot-Mix Asphalt – Longitudinal Joint Sealant	Aug. 1, 2018	
*	80399	30	☑	Hot-Mix Asphalt – Oscillatory Roller	Aug. 1, 2018	Nov. 1, 2018
	80347	31	☐	Hot-Mix Asphalt – Pay for Performance Using Percent Within Limits – Jobsite Sampling	Nov. 1, 2014	Aug. 1, 2018
	80383	32	☐	Hot-Mix Asphalt – Quality Control for Performance	April 1, 2017	Nov. 1, 2017
	80376	33	☑	Hot-Mix Asphalt – Tack Coat	Nov. 1, 2016	
	80392	34	☑	Lights on Barricades	Jan. 1, 2018	
	80336	35	☐	Longitudinal Joint and Crack Patching	April 1, 2014	April 1, 2016
	80393	36	☑	Manholes, Valve Vaults, and Flat Slab Tops	Jan. 1, 2018	March 2, 2018
	80400	37	☐	Mast Arm Assembly and Pole	Aug. 1, 2018	
	80045	38	☐	Material Transfer Device	June 15, 1999	Aug. 1, 2014
	80394	39	☐	Metal Flared End Section for Pipe Culverts	Jan. 1, 2018	April 1, 2018
	80165	40	☐	Moisture Cured Urethane Paint System	Nov. 1, 2006	Jan. 1, 2010
	80349	41	☐	Pavement Marking Blackout Tape	Nov. 1, 2014	April 1, 2016
	80371	42	☐	Pavement Marking Removal	July 1, 2016	
	80390	43	☑	Payments to Subcontractors	Nov. 2, 2017	
	80377	44	☐	Portable Changeable Message Signs	Nov. 1, 2016	April 1, 2017
	80389	45	☑	Portland Cement Concrete	Nov. 1, 2017	
	80359	46	☐	Portland Cement Concrete Bridge Deck Curing	April 1, 2015	Nov. 1, 2017
	80401	47	☐	Portland Cement Concrete Pavement Connector for	Aug. 1, 2018	

			Bridge Approach Slab		
80385	48	☑	Portland Cement Concrete Sidewalk	Aug. 1, 2017	
80300	49	☐	Preformed Plastic Pavement Marking Type D - Inlaid	April 1, 2012	April 1, 2016
80328	50	☑	Progress Payments	Nov. 2, 2013	
3426I	51	☐	Railroad Protective Liability Insurance	Dec. 1, 1986	Jan. 1, 2006
80157	52	☐	Railroad Protective Liability Insurance (5 and 10)	Jan. 1, 2006	
80306	53	☑	Reclaimed Asphalt Pavement (RAP) and Reclaimed Asphalt Shingles (RAS)	Nov. 1, 2012	Jan. 1, 2018
80395	54	☐	Sloped Metal End Section for Pipe Culverts	Jan. 1, 2018	
80340	55	☐	Speed Display Trailer	April 2, 2014	Jan. 1, 2017
80127	56	☑	Steel Cost Adjustment	April 2, 2004	Aug. 1, 2017
80397	57	☑	Subcontractor and DBE Payment Reporting	April 2, 2018	
80391	58	☑	Subcontractor Mobilization Payments	Nov. 2, 2017	
80317	59	☐	Surface Testing of Hot-Mix Asphalt Overlays	Jan. 1, 2013	April 1, 2016
80298	60	☐	Temporary Pavement Marking (NOTE: This special provision was previously named *"Pavement Marking Tape Type IV"*.)	April 1, 2012	April 1, 2017
20338	61	☐	Training Special Provisions	Oct. 15, 1975	
* 80403	62	☐	Traffic Barrier Terminal, Type 1 Special	Nov. 1, 2018	
80318	63	☐	Traversable Pipe Grate for Concrete End Sections (NOTE: This special provision was previously named "*Traversable Pipe Grate*".)	Jan. 1, 2013	Jan. 1, 2018
80288	64	☐	Warm Mix Asphalt	Jan. 1, 2012	April 1, 2016
80302	65	☑	Weekly DBE Trucking Reports	June 2, 2012	April 2, 2015
80071	66	☐	Working Days	Jan. 1, 2002	

The following special provisions are in the 2018 Supplemental Specifications and Recurring Special Provisions.

File Name	Special Provision Title	New Location	Effective	Revised
80368	Light Tower	Article 1069.08	July 1, 2016	
80369	Mast Arm Assembly and Pole	Article 1077.03(a)(1)	July 1, 2016	
80338	Portland Cement Concrete Partial Depth Hot-Mix Asphalt Patching	Recurring CS #35	April 1, 2014	April 1, 2016
80379	Steel Plate Beam Guardrail	Articles 630.02, 630.05, 630.06, and 630.08	Jan. 1, 2017	
80381	Traffic Barrier Terminal, Type 1 Special	Article 631.04	Jan. 1, 2017	
80380	Tubular Markers	Articles 701.03, 701.15, 701.18, and 1106.02	Jan. 1, 2017	

The following special provisions require additional information from the designer. The additional information needs to be submitted as a separate document. The Project Development and Implementation section will then include the information in the applicable special provision. The Special Provisions are:

- Bridge Demolition Debris
- Building Removal - Case I
- Building Removal – Case II
- Building Removal - Case III
- Building Removal-Case IV
- Completion Date
- Completion Date Plus Working Days
- DBE Participation
- Material Transfer Device
- Railroad Protective Liability Insurance
- Training Special Provisions
- Working Days

ADJUSTING FRAMES AND GRATES (BDE)

Effective: April 1, 2017

Add the following to Article 602.02 of the Standard Specifications:

"(s) High Density Expanded Polystyrene Adjusting Rings with Polyurea Coating (Note 4) 1043.04
(t) Expanded Polypropylene (EPP) Adjusting Rings (Note 5) 1043.05

Note 4. High density expanded polystyrene adjusting rings with polyurea coating shall meet the design load requirements of AASHTO HS20/25. The rings may be used to adjust the frames and grates of drainage and utility structures up to a maximum of 6 in. (150 mm). They shall be installed and sealed underneath the frames according to the manufacturer's specifications.

Note 5. Riser rings fabricated from EPP may be used to adjust the frames and grates of drainage and utility structures up to a maximum of 6 in. (150 mm). An adhesive meeting ASTM C 920, Type S, Grade N5, Class 25 shall be used with EPP adjustment rings. The top ring of the adjustment stack shall be a finish ring with grooves on the lower surface and flat upper surface. The joints between all manhole adjustment rings and the frame and cover shall be sealed using the approved adhesive. In lieu of the use of an adhesive, an internal or external mechanical frame-chimney seal may be used for watertight installation. EPP adjustment rings shall not be used with heat shrinkable infiltration barriers."

Add the following to Section 1043 of the Standard Specifications:

"**1043.04 High Density Expanded Polystyrene Adjusting Rings with Polyurea Coating.** High density expanded polystyrene adjustment rings with polyurea coating shall be designed and tested to meet or exceed an HS25 wheel load according to the AASHTO Standard Specifications for Highway Bridges (AASHTO M306 HS-25). The raw material suppliers shall provide certifications of quality or testing using the following ASTM standards, and upon request, certify that only virgin material was used in the manufacturing of the expanded polystyrene rings.

Physical Property	Test Standard	Value	
		3.0 lb/cu ft	4.5 lb/cu ft
Compression Resistance	ASTM D 1621		
at 10% deformation		50 - 70	70 - 90
at 5% deformation		45 - 60	60 - 80
at 2% deformation		15 - 20	20 - 40
Flexural Strength	ASTM D 790	90 - 120	130 - 200
Water Absorption	ASTM D 570	2.0%	1.7%
Coefficient of Linear Expansion	ASTM D 696	2.70E-06 in./in./°F	2.80E-06 in./in./°F
Sheer Strength	ASTM D 732	55	80

Tensile Strength	ASTM D 1623	70 - 90	130 - 140
Water Vapor Transmission	ASTM C 355	0.82 – 0.86 perm – in.	

High density expanded polystyrene adjustment rings with polyurea coating shall have no void areas, cracks, or tears. The actual diameter or length shall not vary more than 0.125 in. (3 mm) from the specified diameter or length. Variations in height are limited to ± 0.063 in. (± 1.6 mm). Variations shall not exceed 0.25 in. (6 mm) from flat (dish, bow, or convoluting edge) or 0.125 in. (3 mm) for bulges or dips in the surface.

1043.05 Expanded Polypropylene (EPP) Adjusting Rings. The EPP adjusting rings shall be manufactured using a high compression molding process to produce a minimum finished density of 7.5 lb/cu ft (120 g/l). The EPP rings shall be made of materials meeting ASTM D 3575 and ASTM D 4819-13. The grade adjustments shall be designed and tested according to the AASHTO Standard Specifications for Highway Bridges (AASHTO M 306 HS-25).

Grade rings shall contain upper and lower keyways (tongue and groove) for proper vertical alignment and sealing. The top ring, for use directly beneath the cast iron frame, shall have keyways (grooves) on the lower surface with a flat upper surface.

Adhesive or sealant used for watertight installation of the manhole grade adjustment rings shall meet ASTM C 920, Type S, Grade NS, Class 25, Uses NT, T, M, G, A, and O.

EPP adjustment rings shall have no void areas, cracks, or tears. The actual diameter or length shall not vary more than 0.125 in. (3 mm) from the specified diameter or length. Variations in height are limited to ± 0.063 in. (± 1.6 mm). Variations shall not exceed 0.25 in. (6 mm) from flat (dish, bow, or convoluting edge) or 0.125 in. (3 mm) for bulges or dips in the surface."

80382

BUTT JOINTS (BDE)

Effective: July 1, 2016

Add the following to Article 406.08 of the Standard Specifications.

"(c) Temporary Plastic Ramps. Temporary plastic ramps shall be made of high density polyethylene meeting the properties listed below. Temporary plastic ramps shall only be used on roadways with permanent posted speeds of 55 mph or less. The ramps shall have a minimum taper rate of 1:30 (V:H). The leading edge of the plastic ramp shall have a maximum thickness of 1/4 in. (6 mm) and the trailing edge shall match the height of the adjacent pavement ± 1/4 in. (± 6 mm).

The ramp will be accepted by certification. The Contractor shall furnish a certification from the manufacturer stating the temporary plastic ramp meets the following requirements.

Physical Property	Test Method	Requirement
Melt Index	ASTM D 1238	8.2 g/10 minutes
Density	ASTM D 1505	0.965 g/cc
Tensile Strength @ Break	ASTM D 638	2223 psi (15 MPa)
Tensile Strength @ Yield	ASTM D 638	4110 psi (28 MPa)
Elongation @ Yield [1/], percent	ASTM D 638	7.3 min.
Durometer Hardness, Shore D	ASTM D 2240	65
Heat Deflection Temperature, 66 psi	ASTM D 648	176 ºF (80 ºC)
Low Temperature Brittleness, F_{50}	ASTM D 746	<-105 ºF (<-76 ºC)

1/ Crosshead speed -2 in./minute

The temporary plastic ramps shall be installed according to the manufacturer's specifications and fastened with anchors meeting the manufacturer's recommendations. Temporary plastic ramps that fail to stay in place or create a traffic hazard shall be replaced immediately with temporary HMA ramps at the Contractor's expense."

80366

COMPENSABLE DELAY COSTS (BDE)

Effective: June 2, 2017

Revise Article 107.40(b) of the Standard Specifications to read:

"(b) Compensation. Compensation will not be allowed for delays, inconveniences, or damages sustained by the Contractor from conflicts with facilities not meeting the above definition; or if a conflict with a utility in an unanticipated location does not cause a shutdown of the work or a documentable reduction in the rate of progress exceeding the limits set herein. The provisions of Article 104.03 notwithstanding, compensation for delays caused by a utility in an unanticipated location will be paid according to the provisions of this Article governing minor and major delays or reduced rate of production which are defined as follows.

(1) Minor Delay. A minor delay occurs when the work in conflict with the utility in an unanticipated location is completely stopped for more than two hours, but not to exceed two weeks.

(2) Major Delay. A major delay occurs when the work in conflict with the utility in an unanticipated location is completely stopped for more than two weeks.

(3) Reduced Rate of Production Delay. A reduced rate of production delay occurs when the rate of production on the work in conflict with the utility in an unanticipated location decreases by more than 25 percent and lasts longer than seven calendar days."

Revise Article 107.40(c) of the Standard Specifications to read:

"(c) Payment. Payment for Minor, Major, and Reduced Rate of Production Delays will be made as follows.

(1) Minor Delay. Labor idled which cannot be used on other work will be paid for according to Article 109.04(b)(1) and (2) for the time between start of the delay and the minimum remaining hours in the work shift required by the prevailing practice in the area.

Equipment idled which cannot be used on other work, and which is authorized to standby on the project site by the Engineer, will be paid for according to Article 109.04(b)(4).

(2) Major Delay. Labor will be the same as for a minor delay.

Equipment will be the same as for a minor delay, except Contractor-owned equipment will be limited to two weeks plus the cost of move-out to either the Contractor's yard or another job and the cost to re-mobilize, whichever is less.

Rental equipment may be paid for longer than two weeks provided the Contractor presents adequate support to the Department (including lease agreement) to show retaining equipment on the job is the most economical course to follow and in the public interest.

(3) Reduced Rate of Production Delay. The Contractor will be compensated for the reduced productivity for labor and equipment time in excess of the 25 percent threshold for that portion of the delay in excess of seven calendar days. Determination of compensation will be in accordance with Article 104.02, except labor and material additives will not be permitted.

Payment for escalated material costs, escalated labor costs, extended project overhead, and extended traffic control will be determined according to Article 109.13."

Revise Article 108.04(b) of the Standard Specifications to read:

"(b) No working day will be charged under the following conditions.

(1) When adverse weather prevents work on the controlling item.

(2) When job conditions due to recent weather prevent work on the controlling item.

(3) When conduct or lack of conduct by the Department or its consultants, representatives, officers, agents, or employees; delay by the Department in making the site available; or delay in furnishing any items required to be furnished to the Contractor by the Department prevents work on the controlling item.

(4) When delays caused by utility or railroad adjustments prevent work on the controlling item.

(5) When strikes, lock-outs, extraordinary delays in transportation, or inability to procure critical materials prevent work on the controlling item, as long as these delays are not due to any fault of the Contractor.

(6) When any condition over which the Contractor has no control prevents work on the controlling item."

Revise Article 109.09(f) of the Standard Specifications to read:

"(f) Basis of Payment. After resolution of a claim in favor of the Contractor, any adjustment in time required for the work will be made according to Section 108. Any adjustment in the costs to be paid will be made for direct labor, direct materials, direct equipment, direct jobsite overhead, direct offsite overhead, and other direct costs allowed by the resolution. Adjustments in costs will not be made for interest charges, loss of anticipated profit, undocumented loss of efficiency, home office overhead and unabsorbed overhead

other than as allowed by Article 109.13, lost opportunity, preparation of claim expenses and other consequential indirect costs regardless of method of calculation.

The above Basis of Payment is an essential element of the contract and the claim cost recovery of the Contractor shall be so limited."

Add the following to Section 109 of the Standard Specifications.

"**109.13 Payment for Contract Delay.** Compensation for escalated material costs, escalated labor costs, extended project overhead, and extended traffic control will be allowed when such costs result from a delay meeting the criteria in the following table.

Contract Type	Cause of Delay	Length of Delay
Working Days	Article 108.04(b)(3) or Article 108.04(b)(4)	No working days have been charged for two consecutive weeks.
Completion Date	Article 108.08(b)(1) or Article 108.08(b)(7)	The Contractor has been granted a minimum two week extension of contract time, according to Article 108.08.

Payment for each of the various costs will be according to the following.

(a) Escalated Material and/or Labor Costs. When the delay causes work, which would have otherwise been completed, to be done after material and/or labor costs have increased, such increases will be paid. Payment for escalated material costs will be limited to the increased costs substantiated by documentation furnished by the Contractor. Payment for escalated labor costs will be limited to those items in Article 109.04(b)(1) and (2), except the 35 percent and 10 percent additives will not be permitted.

(b) Extended Project Overhead. For the duration of the delay, payment for extended project overhead will be paid as follows.

(1) Direct Jobsite and Offsite Overhead. Payment for documented direct jobsite overhead and documented direct offsite overhead, including onsite supervisory and administrative personnel, will be allowed according to the following table.

Original Contract Amount	Supervisory and Administrative Personnel
Up to $5,000,000	One Project Superintendent
Over $ 5,000,000 - up to $25,000,000	One Project Manager, One Project Superintendent or Engineer, and One Clerk
Over $25,000,000 - up to $50,000,000	One Project Manager, One Project Superintendent, One Engineer, and

	One Clerk
Over $50,000,000	One Project Manager, Two Project Superintendents, One Engineer, and One Clerk

(2) Home Office and Unabsorbed Overhead. Payment for home office and unabsorbed overhead will be calculated as 8 percent of the total delay cost.

(c) Extended Traffic Control. Traffic control required for an extended period of time due to the delay will be paid. For working day contracts the payment will be made according to Article 109.04. For completion date contracts, an adjustment will be determined as follows.

Extended Traffic Control occurs between April 1 and November 30:

ETCP Adjustment ($) = TE x (%/100 x CUP / OCT)

Extended Traffic Control occurs between December 1 and March 31:

ETCP Adjustment ($) = TE x 1.5 (%/100 x CUP / OCT)

Where: TE = Duration of approved time extension in calendar days.
% = Percent maintenance for the traffic control, % (see table below).
CUP = Contract unit price for the traffic control pay item in place during the delay.
OCT = Original contract time in calendar days.

Original Contract Amount	Percent Maintenance
Up to $2,000,000	65%
$2,000,000 to $10,000,000	75%
$10,000,000 to $20,000,000	85%
Over $20,000,000	90%

When an ETCP adjustment is paid under this provision, an adjusted unit price as provided for in Article 701.20(a) for increase or decrease in the value of work by more than ten percent will not be paid.

Upon payment for a contract delay under this provision, the Contractor shall assign subrogation rights to the Department for the Department's efforts of recovery from any other party for monies paid by the Department as a result of any claim under this provision. The Contractor shall fully cooperate with the Department in its efforts to recover from another party any money paid to the Contractor for delay damages under this provision."

CONSTRUCTION AIR QUALITY – DIESEL RETROFIT (BDE)

Effective: June 1, 2010
Revised: November 1, 2014

The reduction of emissions of particulate matter (PM) for off-road equipment shall be accomplished by installing retrofit emission control devices. The term "equipment" refers to diesel fuel powered devices rated at 50 hp and above, to be used on the jobsite in excess of seven calendar days over the course of the construction period on the jobsite (including rental equipment).

Contractor and subcontractor diesel powered off-road equipment assigned to the contract shall be retrofitted using the phased in approach shown below. Equipment that is of a model year older than the year given for that equipment's respective horsepower range shall be retrofitted:

Effective Dates	Horsepower Range	Model Year
June 1, 2010 1/	600-749	2002
	750 and up	2006
June 1, 2011 2/	100-299	2003
	300-599	2001
	600-749	2002
	750 and up	2006
June 1, 2012 2/	50-99	2004
	100-299	2003
	300-599	2001
	600-749	2002
	750 and up	2006

1/ Effective dates apply to Contractor diesel powered off-road equipment assigned to the contract.
2/ Effective dates apply to Contractor and subcontractor diesel powered off-road equipment assigned to the contract.

The retrofit emission control devices shall achieve a minimum PM emission reduction of 50 percent and shall be:

a) Included on the U.S. Environmental Protection Agency (USEPA) *Verified Retrofit Technology List* (http://www.epa.gov/cleandiesel/verification/verif-list.htm), or verified by the California Air Resources Board (CARB) (http://www.arb.ca.gov/diesel/verdev/vt/cvt.htm); or

b) Retrofitted with a non-verified diesel retrofit emission control device if verified retrofit emission control devices are not available for equipment proposed to be used on the project, and if the Contractor has obtained a performance certification from the retrofit

device manufacturer that the emission control device provides a minimum PM emission reduction of 50 percent.

Note: Large cranes (Crawler mounted cranes) which are responsible for critical lift operations are exempt from installing retrofit emission control devices if such devices adversely affect equipment operation.

Diesel powered off-road equipment with engine ratings of 50 hp and above, which are unable to be retrofitted with verified emission control devices or if performance certifications are not available which will achieve a minimum 50 percent PM reduction, may be granted a waiver by the Department if documentation is provided showing good faith efforts were made by the Contractor to retrofit the equipment.

Construction shall not proceed until the Contractor submits a certified list of the diesel powered off-road equipment that will be used, and as necessary, retrofitted with emission control devices. The list(s) shall include (1) the equipment number, type, make, Contractor/rental company name; and (2) the emission control devices make, model, USEPA or CARB verification number, or performance certification from the retrofit device manufacturer. Equipment reported as fitted with emissions control devices shall be made available to the Engineer for visual inspection of the device installation, prior to being used on the jobsite.

The Contractor shall submit an updated list of retrofitted off-road construction equipment as retrofitted equipment changes or comes on to the jobsite. The addition or deletion of any diesel powered equipment shall be included on the updated list.

If any diesel powered off-road equipment is found to be in non-compliance with any portion of this special provision, the Engineer will issue the Contractor a diesel retrofit deficiency deduction.

Any costs associated with retrofitting any diesel powered off-road equipment with emission control devices shall be considered as included in the contract unit prices bid for the various items of work involved and no additional compensation will be allowed. The Contractor's compliance with this notice and any associated regulations shall not be grounds for a claim.

Diesel Retrofit Deficiency Deduction

When the Engineer determines that a diesel retrofit deficiency exists, a daily monetary deduction will be imposed for each calendar day or fraction thereof the deficiency continues to exist. The calendar day(s) will begin when the time period for correction is exceeded and end with the Engineer's written acceptance of the correction. The daily monetary deduction will be $1,000.00 for each deficiency identified.

The deficiency will be based on lack of diesel retrofit emissions control.

If a Contractor accumulates three diesel retrofit deficiency deductions for the same piece of equipment in a contract period, the Contractor will be shutdown until the deficiency is corrected.

Such a shutdown will not be grounds for any extension of the contract time, waiver of penalties, or be grounds for any claim.

80261

DISPOSAL FEES (BDE)

Effective: November 1, 2018

Replace Articles 109.04(b)(5) – 109.04(b)(8) of the Standard Specifications with the following:

"(5) Disposal Fees. When the extra work performed includes paying for disposal fees at a clean construction and demolition debris facility, an uncontaminated soil fill operation or a landfill, the Contractor shall receive, as administrative costs, an amount equal to five percent of the first $10,000 and one percent of any amount over $10,000 of the total approved costs of such fees.

(6) Miscellaneous. No additional allowance will be made for general superintendence, the use of small tools, or other costs for which no specific allowance is herein provided.

(7) Statements. No payment will be made for work performed on a force account basis until the Contractor has furnished the Engineer with itemized statements of the cost of such force account work. Statements shall be accompanied and supported by invoices for all materials used and transportation charges. However, if materials used on the force account work are not specifically purchased for such work but are taken from the Contractor's stock, then in lieu of the invoices, the Contractor shall furnish an affidavit certifying that such materials were taken from his/her stock, that the quantity claimed was actually used, and that the price and transportation claimed represent the actual cost to the Contractor.

Itemized statements at the cost of force account work shall be detailed as follows.

a. Name, classification, date, daily hours, total hours, rate, and extension for each laborer and foreman. Payrolls shall be submitted to substantiate actual wages paid if so requested by the Engineer.

b. Designation, dates, daily hours, total hours, rental rate, and extension for each unit of machinery and equipment.

c. Quantities of materials, prices and extensions.

d. Transportation of materials.

e. Cost of property damage, liability and workmen's compensation insurance premiums, unemployment insurance contributions, and social security tax.

(8) Work Performed by an Approved Subcontractor. When extra work is performed by an approved subcontractor, the Contractor shall receive, as administrative costs, an amount equal to five percent of the total approved costs of such work with the minimum payment being $100.

(9) All statements of the cost of force account work shall be furnished to the Engineer not later than 60 days after receipt of the Central Bureau of Construction form “Extra Work Daily Report”. If the statement is not received within the specified time frame, all demands for payment for the extra work are waived and the Department is released from any and all such demands. It is the responsibility of the Contractor to ensure that all statements are received within the specified time regardless of the manner or method of delivery.”

80402

EQUIPMENT PARKING AND STORAGE (BDE)

Effective: November 1, 2017

Replace the first paragraph of Article 701.11 of the Standard Specifications with the following.

"**701.11 Equipment Parking and Storage.** During working hours, all vehicles and/or nonoperating equipment which are parked, two hours or less, shall be parked at least 8 ft (2.5 m) from the open traffic lane. For other periods of time during working and for all nonworking hours, all vehicles, materials, and equipment shall be parked or stored as follows.

(a) When the project has adequate right-of-way, vehicles, materials, and equipment shall be located a minimum of 30 ft (9 m) from the pavement.

(b) When adequate right-of-way does not exist, vehicles, materials, and equipment shall be located a minimum of 15 ft (4.5 m) from the edge of any pavement open to traffic.

(c) Behind temporary concrete barrier, vehicles, materials, and equipment shall be located a minimum of 24 in. (600 mm) behind free standing barrier or a minimum of 6 in. (150 mm) behind barrier that is either pinned or restrained according to Article 704.04. The 24 in. or 6 in. measurement shall be from the base of the non-traffic side of the barrier.

(d) Behind other man-made or natural barriers meeting the approval of the Engineer."

80388

FUEL COST ADJUSTMENT (BDE)

Effective: April 1, 2009
Revised: August 1, 2017

Description. Fuel cost adjustments will be made to provide additional compensation to the Contractor, or a credit to the Department, for fluctuations in fuel prices when optioned by the Contractor. The bidder shall indicate with their bid whether or not this special provision will be part of the contract. Failure to indicate "Yes" for any category of work will make that category of work exempt from fuel cost adjustment.

General. The fuel cost adjustment shall apply to contract pay items as grouped by category. The adjustment shall only apply to those categories of work checked "Yes", and only when the cumulative plan quantities for a category exceed the required threshold. Adjustments to work items in a category, either up or down, and extra work paid for by agreed unit price will be subject to fuel cost adjustment only when the category representing the added work was subject to the fuel cost adjustment. Extra work paid for at a lump sum price or by force account will not be subject to fuel cost adjustment. Category descriptions and thresholds for application and the fuel usage factors which are applicable to each are as follows:

(a) Categories of Work.

(1) Category A: Earthwork. Contract pay items performed under Sections 202, 204, and 206 including any modified standard or nonstandard items where the character of the work to be performed is considered earthwork. The cumulative total of all applicable item plan quantities shall exceed 25,000 cu yd (20,000 cu m). Included in the fuel usage factor is a weighted average 0.10 gal/cu yd (0.50 liters/cu m) factor for trucking.

(2) Category B: Subbases and Aggregate Base Courses. Contract pay items constructed under Sections 311, 312 and 351 including any modified standard or nonstandard items where the character of the work to be performed is considered construction of a subbase or aggregate, stabilized or modified base course. The cumulative total of all applicable item plan quantities shall exceed 5000 tons (4500 metric tons). Included in the fuel usage factor is a 0.60 gal/ton (2.50 liters/metric ton) factor for trucking.

(3) Category C: Hot-Mix Asphalt (HMA) Bases, Pavements and Shoulders. Contract pay items constructed under Sections 355, 406, 407 and 482 including any modified standard or nonstandard items where the character of the work to be performed is considered HMA bases, pavements and shoulders. The cumulative total of all applicable item plan quantities shall exceed 5000 tons (4500 metric tons). Included in the fuel usage factor is 0.60 gal/ton (2.50 liters/metric ton) factor for trucking.

(4) Category D: Portland Cement Concrete (PCC) Bases, Pavements and Shoulders. Contract pay items constructed under Sections 353, 420, 421 and 483 including any

modified standard or nonstandard items where the character of the work to be performed is considered PCC base, pavement or shoulder. The cumulative total of all applicable item plan quantities shall exceed 7500 sq yd (6000 sq m). Included in the fuel usage factor is 1.20 gal/cu yd (5.94 liters/cu m) factor for trucking.

(5) Category E: Structures. Structure items having a cumulative bid price that exceeds $250,000 for pay items constructed under Sections 502, 503, 504, 505, 512, 516 and 540 including any modified standard or nonstandard items where the character of the work to be performed is considered structure work when similar to that performed under these sections and not included in categories A through D.

(b) Fuel Usage Factors.

English Units

Category	Factor	Units
A - Earthwork	0.34	gal / cu yd
B – Subbase and Aggregate Base courses	0.62	gal / ton
C – HMA Bases, Pavements and Shoulders	1.05	gal / ton
D – PCC Bases, Pavements and Shoulders	2.53	gal / cu yd
E – Structures	8.00	gal / $1000

Metric Units

Category	Factor	Units
A - Earthwork	1.68	liters / cu m
B – Subbase and Aggregate Base courses	2.58	liters / metric ton
C – HMA Bases, Pavements and Shoulders	4.37	liters / metric ton
D – PCC Bases, Pavements and Shoulders	12.52	liters / cu m
E – Structures	30.28	liters / $1000

(c) Quantity Conversion Factors.

Category	Conversion	Factor
B	sq yd to ton	0.057 ton / sq yd / in depth
	sq m to metric ton	0.00243 metric ton / sq m / mm depth
C	sq yd to ton	0.056 ton / sq yd / in depth
	sq m to metric ton	0.00239 m ton / sq m / mm depth
D	sq yd to cu yd	0.028 cu yd / sq yd / in depth
	sq m to cu m	0.001 cu m / sq m / mm depth

<u>Method of Adjustment</u>. Fuel cost adjustments will be computed as follows.

$CA = (FPI_P - FPI_L) \times FUF \times Q$

Where: CA = Cost Adjustment, $

FPI_P = Fuel Price Index, as published by the Department for the month the work is performed, $/gal ($/liter)

FPI_L = Fuel Price Index, as published by the Department for the month prior to the letting for work paid for at the contract price; or for the month the agreed unit price letter is submitted by the Contractor for extra work paid for by agreed unit price, $/gal ($/liter)

FUF = Fuel Usage Factor in the pay item(s) being adjusted

Q = Authorized construction Quantity, tons (metric tons) or cu yd (cu m)

The entire FUF indicated in paragraph (b) will be used regardless of use of trucking to perform the work.

Basis of Payment. Fuel cost adjustments may be positive or negative but will only be made when there is a difference between the FPI_L and FPI_P in excess of five percent, as calculated by:

$$\text{Percent Difference} = \{(FPI_L - FPI_P) \div FPI_L\} \times 100$$

Fuel cost adjustments will be calculated for each calendar month in which applicable work is performed; and will be paid or deducted when all other contract requirements for the items of work are satisfied. The adjustments shall not apply during contract time subject to liquidated damages for completion of the entire contract.

80229

HOT-MIX ASPHALT - DENSITY TESTING OF LONGITUDINAL JOINTS (BDE)

Effective: January 1, 2010
Revised: August 1, 2018

Description. This work shall consist of testing the density of longitudinal joints as part of the quality control/quality assurance (QC/QA) of hot-mix asphalt (HMA). Work shall be according to Section 1030 of the Standard Specifications except as follows.

Quality Control/Quality Assurance (QC/QA). Delete the second and third sentence of the third paragraph of Article 1030.05(d)(3) of the Standard Specifications.

Add the following paragraphs to the end of Article 1030.05(d)(3) of the Standard Specifications:

"Longitudinal joint density testing shall be performed at each random density test location. Longitudinal joint testing shall be located at a distance equal to the lift thickness or a minimum of 4 in. (100 mm), from each pavement edge. (i.e. for a 5 in. (125 mm) lift the near edge of the density gauge or core barrel shall be within 5 in. (125 mm) from the edge of pavement.) Longitudinal joint density testing shall be performed using either a correlated nuclear gauge or cores.

a. Confined Edge. Each confined edge density shall be represented by a one-minute nuclear density reading or a core density and shall be included in the average of density readings or core densities taken across the mat which represents the Individual Test.

b. Unconfined Edge. Each unconfined edge joint density shall be represented by an average of three one-minute density readings or a single core density at the given density test location and shall meet the density requirements specified herein. The three one-minute readings shall be spaced 10 ft (3 m) apart longitudinally along the unconfined pavement edge and centered at the random density test location.

When a longitudinal joint sealant (LJS) is applied, longitudinal joint density testing will not be required on the joint(s) sealed."

Revise the Density Control Limits table in Article 1030.05(d)(4) of the Standard Specifications to read:

"Mixture Composition	Parameter	Individual Test (includes confined edges)	Unconfined Edge Joint Density Minimum
IL-4.75	Ndesign = 50	93.0 – 97.4% 1/	91.0%
IL-9.5	Ndesign = 90	92.0 – 96.0%	90.0%
IL-9.5,IL-9.5L	Ndesign < 90	92.5 – 97.4%	90.0%
IL-19.0	Ndesign = 90	93.0 – 96.0%	90.0%
IL-19.0, IL-19.0L	Ndesign < 90	93.0 2/– 97.4%	90.0%

SMA	Ndesign = 50 & 80	93.5 – 97.4%	91.0%”

80246

HOT-MIX ASPHALT – OSCILLATORY ROLLER (BDE)

Effective: August 1, 2018
Revised: November 1, 2018

Add the following to Article 406.03 of the Standard Specifications:

"(j) Oscillatory Roller .....1101.01"

Revise Table 1 and Note 3/ of Table 1 in Article 406.07(a) of the Standard Specifications to read:

"TABLE 1 - MINIMUM ROLLER REQUIREMENTS FOR HMA				
	Breakdown Roller (one of the following)	Intermediate Roller	Final Roller (one or more of the following)	Density Requirement
Level Binder: (When the density requirements of Article 406.05(c) do not apply.)	P 3/	- -	V_S, P 3/, T_B, T_F, 3W, O_T	To the satisfaction of the Engineer.
Binder and Surface 1/ Level Binder 1/: (When the density requirements of Article 406.05(c) apply.)	V_D, P 3/, T_B, 3W, O_T, O_B	P 3/, O_T, O_B	V_S, T_B, T_F, O_T	As specified in Articles: 1030.05(d)(3), (d)(4), and (d)(7).
IL-4.75 and SMA 4/ 5/	T_B, 3W, O_T	- -	T_F, 3W, O_T	
Bridge Decks 2/	T_B	- -	T_F	As specified in Articles 582.05 and 582.06.

3/ A vibratory roller (V_D) or oscillatory roller (O_T or O_B) may be used in lieu of the pneumatic-tired roller on mixtures containing polymer modified asphalt binder."

Add the following to EQUIPMENT DEFINITION in Article 406.07(a) contained in the Errata of the Supplemental Specifications:

"O_T - Oscillatory roller, tangential impact mode. Maximum speed is 3.0 mph (4.8 km/h) or 264 ft/min (80 m/min).

O_B - Oscillatory roller, tangential and vertical impact mode, operated at a speed to produce not less than 10 vertical impacts/ft (30 impacts/m)."

Add the following to Article 1101.01 of the Standard Specifications:

"(h) Oscillatory Roller. The oscillatory roller shall be self-propelled and provide a smooth operation when starting, stopping, or reversing directions. The oscillatory roller shall be able to operate in a mode that will provide tangential impact force with or without vertical impact force by using at least one drum. The oscillatory roller shall be equipped with water tanks and sprinkling devices, or other approved methods, which shall be used to wet the drums to prevent material pickup. The drum(s) amplitude and frequency of the tangential and vertical impact force shall be approximately the same in each direction and meet the following requirements:

(1) The minimum diameter of the drum(s) shall be 42 in. (1070 mm)48 in. (1200 mm);

(2) The minimum length of the drum(s) shall be 57 in. (1480 mm)66 in. (1650 mm);

(3) The minimum unit static force on the drum(s) shall be 125 lb/in. (22 N/m); and

(4) The minimum force on the oscillatory drum shall be 18,000 lb (80 kN)."; and

(5) Self-adjusting eccentrics, and reversible eccentrics on non-driven drum(s)."

80399

HOT-MIX ASPHALT – TACK COAT (BDE)

Effective: November 1, 2016

Revise Article 1032.06(a) of the Standard Specifications to read:

"(a) Anionic Emulsified Asphalt. Anionic emulsified asphalts shall be according to AASHTO M 140. SS-1h emulsions used as a tack coat shall have the cement mixing test waived."

80376

LIGHTS ON BARRICADES (BDE)

Effective: January 1, 2018

Revise Article 701.16 of the Standard Specifications to read:

"**701.16 Lights.** Lights shall be used on devices as required in the plans, the traffic control plan, and the following table.

Circumstance	Lights Required
Daylight operations	None
First two warning signs on each approach to the work involving a nighttime lane closure and "ROUGH GROOVED SURFACE" (W8-I107) signs	Flashing mono-directional lights
Devices delineating isolated obstacles, excavations, or hazards at night (Does not apply to patching)	Flashing bi-directional lights
Devices delineating obstacles, excavations, or hazards exceeding 100 ft (30 m) in length at night (Does not apply to widening)	Steady burn bi-directional lights
Channelizing devices for nighttime lane closures on two-lane roads	None
Channelizing devices for nighttime lane closures on multi-lane roads	None
Channelizing devices for nighttime lane closures on multi-lane roads separating opposing directions of traffic	None
Channelizing devices for nighttime along lane shifts on multilane roads	Steady burn mono-directional lights
Channelizing devices for night time along lane shifts on two lane roads	Steady burn bi-directional lights
Devices in nighttime lane closure tapers on Standards 701316 and 701321	Steady burn bi-directional lights
Devices in nighttime lane closure tapers	Steady burn mono-directional lights
Devices delineating a widening trench	None
Devices delineating patches at night on roadways with an ADT less than 25,000	None
Devices delineating patches at night on roadways with an ADT of 25,000 or more	None

Batteries for the lights shall be replaced on a group basis at such times as may be specified by the Engineer."

Delete the fourth sentence of the first paragraph of Article 701.17(c)(2) of the Standard Specifications.

Revise the first paragraph of Article 603.07 of the Standard Specifications to read:

"**603.07 Protection Under Traffic.** After the casting has been adjusted and Class SI concrete has been placed, the work shall be protected by a barricade for at least 72 hours."

80392

MANHOLES, VALVE VAULTS, AND FLAT SLAB TOPS (BDE)

Effective: January 1, 2018
Revised: March 2, 2018

Description. Manholes, valve vaults, and flat slab tops manufactured according to the current or previous Highway Standards listed below will be accepted on this contract:

Product	Current Standard	Previous Standard
Precast Manhole Type A, 4' (1.22 m) Diameter	602401-04	602401-03
Precast Manhole Type A, 5' (1.52 m) Diameter	602402	602401-03
Precast Manhole Type A, 6' (1.83 m) Diameter	602406-08	602406-07
Precast Manhole Type A, 7' (2.13 m) Diameter	602411-06	602411-05
Precast Manhole Type A, 8' (2.44 m) Diameter	602416-06	602416-05
Precast Manhole Type A, 9' (2.74 m) Diameter	602421-06	602421-05
Precast Manhole Type A, 10' (3.05 m) Diameter	602426	n/a
Precast Valve Vault Type A, 4' (1.22 m) Diameter	602501-03	602501-02
Precast Valve Vault Type A, 5' (1.52 m) Diameter	602506	602501-02
Precast Reinforced Concrete Flat Slab Top	602601-05	602601-04

When manufacturing to the current standards, the following revisions to the Standard Specifications shall apply:

Revise Article 602.02(g) of the Standard Specifications to read:

"(g) Structural Steel (Note 4) 1006.04

Note 4. All components of the manhole joint splice shall be galvanized according to the requirements of AASHTO M 111 or M 232 as applicable."

Add the following to Article 602.02 of the Standard Specifications:

"(s) Anchor Bolts and Rods (Note 5) 1006.09

Note 5. The threaded rods for the manhole joint splice shall be according to the requirements of ASTM F 1554, Grade 55, (Grade 380)."

Add the following paragraph after the first paragraph of Article 602.07 of the Standard Specifications:

"Threaded rods connecting precast sections shall be brought to a snug tight condition."

Revise the second paragraph of Article 1042.10 of the Standard Specifications to read:

"Catch basin Types A, B, C, and D; Manhole Type A; Inlet Types A and B; Drainage Structures Types 1, 2, 3, 4, 5, and 6; Valve Vault Type A; and reinforced concrete flat slab top

(Highway Standard 602601) shall be according to AASHTO M 199 (M 199M), except the minimum wall thickness shall be 3 in. (75 mm). Additionally, catch basins, inlets, and drainage structures shall have a minimum concrete compressive strength of 4500 psi (31,000 kPa) at 28 days and manholes, valve vaults, and reinforced concrete flat slab tops shall have a minimum concrete compressive strength of 5000 psi (34,500 kPa) at 28 days."

80393

PAYMENTS TO SUBCONTRACTORS (BDE)

Effective: November 2, 2017

Add the following to the end of the fourth paragraph of Article 109.11 of the Standard Specifications:

"If reasonable cause is asserted, written notice shall be provided to the applicable subcontractor and/or material supplier and the Engineer within five days of the Contractor receiving payment. The written notice shall identify the contract number, the subcontract or material purchase agreement, a detailed reason for refusal, the value of payment being withheld, and the specific remedial actions required of the subcontractor and/or material supplier so that payment can be made."

80390

PORTLAND CEMENT CONCRETE (BDE)

Effective: November 1, 2017

Revise the Air Content % of Class PP Concrete in Table 1 Classes of Concrete and Mix Design Criteria in Article 1020.04 of the Standard Specifications to read:

"TABLE 1. CLASSES OF CONCRETE AND MIX DESIGN CRITERIA		
Class of Conc.	Use	Air Content %
PP	Pavement Patching Bridge Deck Patching (10)	
	PP-1	4.0 - 8.0"
	PP-2	
	PP-3	
	PP-4	
	PP-5	

Revise Note (4) at the end of Table 1 Classes of Concrete and Mix Design Criteria in Article 1020.04 of the Standard Specifications to read:

"(4) For all classes of concrete, the maximum slump may be increased to 7 in (175 mm) when a high range water-reducing admixture is used. For Class SC, the maximum slump may be increased to 8 in. (200 mm). For Class PS, the maximum slump may be increased to 8 1/2 in. (215 mm) if the high range water-reducing admixture is the polycarboxylate type."

80389

PORTLAND CEMENT CONCRETE SIDEWALK (BDE)

Effective: August 1, 2017

Revise the first paragraph of Article 424.12 of the Standard Specifications to read:

"**424.12 Method of Measurement.** This work will be measured for payment in place and the area computed in square feet (square meters). Curb ramps, including side curbs and side flares, will be measured for payment as sidewalk. No deduction will be made for detectable warnings located within the ramp."

80385

PROGRESS PAYMENTS (BDE)

Effective: November 2, 2013

Revise Article 109.07(a) of the Standard Specifications to read:

"(a) Progress Payments. At least once each month, the Engineer will make a written estimate of the quantity of work performed in accordance with the contract, and the value thereof at the contract unit prices. The amount of the estimate approved as due for payment will be vouchered by the Department and presented to the State Comptroller for payment. No amount less than $1000.00 will be approved for payment other than the final payment.

Progress payments may be reduced by liens filed pursuant to Section 23(c) of the Mechanics' Lien Act, 770 ILCS 60/23(c).

If a Contractor or subcontractor has defaulted on a loan issued under the Department's Disadvantaged Business Revolving Loan Program (20 ILCS 2705/2705-610), progress payments may be reduced pursuant to the terms of that loan agreement. In such cases, the amount of the estimate related to the work performed by the Contractor or subcontractor, in default of the loan agreement, will be offset, in whole or in part, and vouchered by the Department to the Working Capital Revolving Fund or designated escrow account. Payment for the work shall be considered as issued and received by the Contractor or subcontractor on the date of the offset voucher. Further, the amount of the offset voucher shall be a credit against the Department's obligation to pay the Contractor, the Contractor's obligation to pay the subcontractor, and the Contractor's or subcontractor's total loan indebtedness to the Department. The offset shall continue until such time as the entire loan indebtedness is satisfied. The Department will notify the Contractor and Fund Control Agent in a timely manner of such offset. The Contractor or subcontractor shall not be entitled to additional payment in consideration of the offset.

The failure to perform any requirement, obligation, or term of the contract by the Contractor shall be reason for withholding any progress payments until the Department determines that compliance has been achieved."

80328

RECLAIMED ASPHALT PAVEMENT AND RECLAIMED ASPHALT SHINGLES (BDE)

Effective: November 1, 2012
Revise: January 1, 2018

Revise Section 1031 of the Standard Specifications to read:

"**SECTION 1031. RECLAIMED ASPHALT PAVEMENT AND RECLAIMED ASPHALT SHINGLES**

1031.01 Description. Reclaimed asphalt pavement and reclaimed asphalt shingles shall be according to the following.

(a) Reclaimed Asphalt Pavement (RAP). RAP is the material produced by cold milling or crushing an existing hot-mix asphalt (HMA) pavement. The Contractor shall supply written documentation that the RAP originated from routes or airfields under federal, state, or local agency jurisdiction.

(b) Reclaimed Asphalt Shingles (RAS). Reclaimed asphalt shingles (RAS). RAS is from the processing and grinding of preconsumer or post-consumer shingles. RAS shall be a clean and uniform material with a maximum of 0.5 percent unacceptable material, as defined in Central Bureau of Materials Policy Memorandum, "Reclaimed Asphalt Shingle (RAS) Sources", by weight of RAS. All RAS used shall come from a Central Bureau of Materials approved processing facility where it shall be ground and processed to 100 percent passing the 3/8 in. (9.5 mm) sieve and 93 percent passing the #4 (4.75 mm) sieve based on a dry shake gradation. RAS shall be uniform in gradation and asphalt binder content and shall meet the testing requirements specified herein. In addition, RAS shall meet the following Type 1 or Type 2 requirements.

(1) Type 1. Type 1 RAS shall be processed, preconsumer asphalt shingles salvaged from the manufacture of residential asphalt roofing shingles.

(2) Type 2. Type 2 RAS shall be processed post-consumer shingles only, salvaged from residential, or four unit or less dwellings not subject to the National Emission Standards for Hazardous Air Pollutants (NESHAP).

1031.02 Stockpiles. RAP and RAS stockpiles shall be according to the following.

(a) RAP Stockpiles. The Contractor shall construct individual, sealed RAP stockpiles meeting one of the following definitions. No additional RAP shall be added to the pile after the pile has been sealed. Stockpiles shall be sufficiently separated to prevent intermingling at the base. Stockpiles shall be identified by signs indicating the type as listed below (i.e. "Homogeneous Surface").

Prior to milling, the Contractor shall request the District provide documentation on the quality of the RAP to clarify the appropriate stockpile.

(1) Fractionated RAP (FRAP). FRAP shall consist of RAP from Class I, HMA (High and Low ESAL) mixtures. The coarse aggregate in FRAP shall be crushed aggregate and may represent more than one aggregate type and/or quality, but shall be at least C quality. All FRAP shall be fractionated prior to testing by screening into a minimum of two size fractions with the separation occurring on or between the #4 (4.75 mm) and 1/2 in. (12.5 mm) sieves. Agglomerations shall be minimized such that 100 percent of the RAP shall pass the sieve size specified below for the mix into which the FRAP will be incorporated.

Mixture FRAP will be used in:	Sieve Size that 100 % of FRAP Shall Pass
IL-19.0	1 1/2 in. (40 mm)
IL-9.5	3/4 in. (20 mm)
IL-4.75	1/2 in. (13 mm)

(2) Homogeneous. Homogeneous RAP stockpiles shall consist of RAP from Class I, HMA (High and Low ESAL) mixtures and represent: 1) the same aggregate quality, but shall be at least C quality; 2) the same type of crushed aggregate (either crushed natural aggregate, ACBF slag, or steel slag); 3) similar gradation; and 4) similar asphalt binder content. If approved by the Engineer, combined single pass surface/binder millings may be considered "homogeneous" with a quality rating dictated by the lowest coarse aggregate quality present in the mixture.

(3) Conglomerate. Conglomerate RAP stockpiles shall consist of RAP from Class I, HMA (High and Low ESAL) mixtures. The coarse aggregate in this RAP shall be crushed aggregate and may represent more than one aggregate type and/or quality, but shall be at least C quality. This RAP may have an inconsistent gradation and/or asphalt binder content prior to processing. All conglomerate RAP shall be processed prior to testing by crushing to where all RAP shall pass the 5/8 in. (16 mm) or smaller screen. Conglomerate RAP stockpiles shall not contain steel slag.

(4) Non-Quality. RAP stockpiles that do not meet the requirements of the stockpile categories listed above shall be classified as "Non-Quality".

RAP/FRAP containing contaminants, such as earth, brick, sand, concrete, sheet asphalt, bituminous surface treatment (i.e. chip seal), pavement fabric, joint sealants, etc., will be unacceptable unless the contaminants are removed to the satisfaction of the Engineer. Sheet asphalt shall be stockpiled separately.

(b) RAS Stockpiles. Type 1 and Type 2 RAS shall be stockpiled separately and shall not be intermingled. Each stockpile shall be signed indicating what type of RAS is present.

Unless otherwise specified by the Engineer, mechanically blending manufactured sand (FM 20 or FM 22) up to an equal weight of RAS with the processed RAS will be permitted to improve workability. The sand shall be "B Quality" or better from an

approved Aggregate Gradation Control System source. The sand shall be accounted for in the mix design and during HMA production.

Records identifying the shingle processing facility supplying the RAS, RAS type, and lot number shall be maintained by project contract number and kept for a minimum of three years.

1031.03 Testing. RAP/FRAP and RAS testing shall be according to the following.

(a) RAP/FRAP Testing. When used in HMA, the RAP/FRAP shall be sampled and tested either during or after stockpiling.

(1) During Stockpiling. For testing during stockpiling, washed extraction samples shall be run at the minimum frequency of one sample per 500 tons (450 metric tons) for the first 2000 tons (1800 metric tons) and one sample per 2000 tons (1800 metric tons) thereafter. A minimum of five tests shall be required for stockpiles less than 4000 tons (3600 metric tons).

(2) After Stockpiling. For testing after stockpiling, the Contractor shall submit a plan for approval to the District proposing a satisfactory method of sampling and testing the RAP/FRAP pile either in-situ or by restockpiling. The sampling plan shall meet the minimum frequency required above and detail the procedure used to obtain representative samples throughout the pile for testing.

Each sample shall be split to obtain two equal samples of test sample size. One of the two test samples from the final split shall be labeled and stored for Department use. The Contractor shall extract the other test sample according to Department procedure. The Engineer reserves the right to test any sample (split or Department-taken) to verify Contractor test results.

(b) RAS Testing. RAS or RAS blended with manufactured sand shall be sampled and tested during stockpiling according to Central Bureau of Materials Policy Memorandum, “Reclaimed Asphalt Shingle (RAS) Source”.

Samples shall be collected during stockpiling at the minimum frequency of one sample per 200 tons (180 metric tons) for the first 1000 tons (900 metric tons) and one sample per 250 tons (225 metric tons) thereafter. A minimum of five samples are required for stockpiles less than 1000 tons (900 metric tons). Once a ≤ 1000 ton (900 metric ton), five-sample/test stockpile has been established it shall be sealed. Additional incoming RAS or RAS blended with manufactured sand shall be stockpiled in a separate working pile as designated in the Quality Control plan and only added to the sealed stockpile when the test results of the working pile are complete and are found to meet the tolerances specified herein for the original sealed RAS stockpile.

Before testing, each sample shall be split to obtain two test samples. One of the two test samples from the final split shall be labeled and stored for Department use. The

Contractor shall perform a washed extraction and test for unacceptable materials on the other test sample according to Department procedures. The Engineer reserves the right to test any sample (split or Department-taken) to verify Contractor test results.

If the sampling and testing was performed at the shingle processing facility in accordance with the QC Plan, the Contractor shall obtain and make available all of the test results from start of the initial stockpile.

1031.04 Evaluation of Tests. Evaluation of test results shall be according to the following.

(a) Evaluation of RAP/FRAP Test Results. All of the extraction results shall be compiled and averaged for asphalt binder content and gradation, and when applicable G_{mm}. Individual extraction test results, when compared to the averages, will be accepted if within the tolerances listed below.

Parameter	FRAP/Homogeneous/ Conglomerate
1 in. (25 mm)	
1/2 in. (12.5 mm)	± 8 %
No. 4 (4.75 mm)	± 6 %
No. 8 (2.36 mm)	± 5 %
No. 16 (1.18 mm)	
No. 30 (600 µm)	± 5 %
No. 200 (75 µm)	± 2.0 %
Asphalt Binder	± 0.4 % 1/
G_{mm}	± 0.03

1/ The tolerance for FRAP shall be ± 0.3 %.

If more than 20 percent of the individual sieves and/or asphalt binder content tests are out of the above tolerances, the RAP/FRAP shall not be used in HMA unless the RAP/FRAP representing the failing tests is removed from the stockpile. All test data and acceptance ranges shall be sent to the District for evaluation.

With the approval of the Engineer, the ignition oven may be substituted for extractions according to the ITP, “Calibration of the Ignition Oven for the Purpose of Characterizing Reclaimed Asphalt Pavement (RAP)”.

(b) Evaluation of RAS and RAS Blended with Manufactured Sand Test Results. All of the test results, with the exception of percent unacceptable materials, shall be compiled and averaged for asphalt binder content and gradation. Individual test results, when compared to the averages, will be accepted if within the tolerances listed below.

Parameter	RAS
No. 8 (2.36 mm)	± 5 %

No. 16 (1.18 mm)	± 5 %
No. 30 (600 µm)	± 4 %
No. 200 (75 µm)	± 2.0 %
Asphalt Binder Content	± 1.5 %

If more than 20 percent of the individual sieves and/or asphalt binder content tests are out of the above tolerances, or if the percent unacceptable material exceeds 0.5 percent by weight of material retained on the # 4 (4.75 mm) sieve, the RAS or RAS blend shall not be used in Department projects. All test data and acceptance ranges shall be sent to the District for evaluation.

1031.05 Quality Designation of Aggregate in RAP/FRAP.

(a) RAP. The aggregate quality of the RAP for homogeneous and conglomerate stockpiles shall be set by the lowest quality of coarse aggregate in the RAP stockpile and are designated as follows.

(1) RAP from Class I, Superpave/HMA (High ESAL), or (Low ESAL) IL-9.5L surface mixtures are designated as containing Class B quality coarse aggregate.

(2) RAP from Class I binder, Superpave/HMA (High ESAL) binder, or (Low ESAL) IL-19.0L binder mixtures are designated as containing Class C quality coarse aggregate.

(b) FRAP. If the Engineer has documentation of the quality of the FRAP aggregate, the Contractor shall use the assigned quality provided by the Engineer.

If the quality is not known, the quality shall be determined as follows. Coarse and fine FRAP stockpiles containing plus #4 (4.75 mm) sieve coarse aggregate shall have a maximum tonnage of 5000 tons (4500 metric tons). The Contractor shall obtain a representative sample witnessed by the Engineer. The sample shall be a minimum of 50 lb (25 kg). The sample shall be extracted according to Illinois Modified AASHTO T 164 by a consultant laboratory prequalified by the Department for the specified testing. The consultant laboratory shall submit the test results along with the recovered aggregate to the District Office. The cost for this testing shall be paid by the Contractor. The District will forward the sample to the Central Bureau of Materials Aggregate Lab for MicroDeval Testing, according to ITP 327. A maximum loss of 15.0 percent will be applied for all HMA applications.

1031.06 Use of RAP/FRAP and/or RAS in HMA. The use of RAP/FRAP and/or RAS shall be the Contractor's option when constructing HMA in all contracts.

(a) RAP/FRAP. The use of RAP/FRAP in HMA shall be as follows.

(1) Coarse Aggregate Size. The coarse aggregate in all RAP shall be equal to or less than the nominal maximum size requirement for the HMA mixture to be produced.

(2) Steel Slag Stockpiles. Homogeneous RAP stockpiles containing steel slag will be approved for use in all HMA (High ESAL and Low ESAL) Surface and Binder Mixture applications.

(3) Use in HMA Surface Mixtures (High and Low ESAL). RAP/FRAP stockpiles for use in HMA surface mixtures (High and Low ESAL) shall be FRAP or homogeneous in which the coarse aggregate is Class B quality or better. FRAP from Conglomerate stockpiles shall be considered equivalent to limestone for frictional considerations. Known frictional contributions from plus #4 (4.75 mm) homogeneous FRAP stockpiles will be accounted for in meeting frictional requirements in the specified mixture.

(4) Use in HMA Binder Mixtures (High and Low ESAL), HMA Base Course, and HMA Base Course Widening. RAP/FRAP stockpiles for use in HMA binder mixtures (High and Low ESAL), HMA base course, and HMA base course widening shall be FRAP, homogeneous, or conglomerate, in which the coarse aggregate is Class C quality or better.

(5) Use in Shoulders and Subbase. RAP/FRAP stockpiles for use in HMA shoulders and stabilized subbase (HMA) shall be FRAP, homogeneous, or conglomerate.

(6) When the Contractor chooses the RAP option, the percentage of RAP shall not exceed the amounts indicated in Article 1031.06(c)(1) below for a given Ndesign.

(b) RAS. RAS meeting Type 1 or Type 2 requirements will be permitted in all HMA applications as specified herein.

(c) RAP/FRAP and/or RAS Usage Limits. Type 1 or Type 2 RAS may be used alone or in conjunction with RAP or FRAP in HMA mixtures up to a maximum of 5.0 percent by weight of the total mix.

(1) RAP/RAS. When RAP is used alone or RAP is used in conjunction with RAS, the percentage of virgin asphalt binder replacement shall not exceed the amounts listed in the Max RAP/RAS ABR table listed below for the given Ndesign.

RAP/RAS Maximum Asphalt Binder Replacement (ABR) Percentage

HMA Mixtures 1/, 2/	RAP/RAS Maximum ABR %		
Ndesign	Binder/Leveling Binder	Surface	Polymer Modified
30	30	30	10
50	25	15	10
70	15	10	10
90	10	10	10

1/ For Low ESAL HMA shoulder and stabilized subbase, the RAP/RAS ABR shall not exceed 50 percent of the mixture.

2/ When RAP/RAS ABR exceeds 20 percent, the high and low virgin asphalt binder grades shall each be reduced by one grade (i.e. 25 percent ABR would require a virgin asphalt binder grade of PG 64-22 to be reduced to a PG 58-28). If warm mix asphalt (WMA) technology is utilized and production temperatures do not exceed 275 °F (135 °C), the high and low virgin asphalt binder grades shall each be reduced by one grade when RAP/RAS ABR exceeds 25 percent (i.e. 26 percent RAP/RAS ABR would require a virgin asphalt binder grade of PG 64-22 to be reduced to a PG 58-28).

(2) FRAP/RAS. When FRAP is used alone or FRAP is used in conjunction with RAS, the percentage of virgin asphalt binder replacement shall not exceed the amounts listed in the FRAP/RAS table listed below for the given Ndesign.

FRAP/RAS Maximum Asphalt Binder Replacement (ABR) Percentage

HMA Mixtures 1/, 2/	FRAP/RAS Maximum ABR %		
Ndesign	Binder/Leveling Binder	Surface	Polymer Modified 3/, 4/
30	50	40	10
50	40	35	10
70	40	30	10
90	40	30	10

1/ For Low ESAL HMA shoulder and stabilized subbase, the FRAP/RAS ABR shall not exceed 50 percent of the mixture.

2/ When FRAP/RAS ABR exceeds 20 percent for all mixes, the high and low virgin asphalt binder grades shall each be reduced by one grade (i.e. 25 percent ABR would require a virgin asphalt binder grade of PG 64-22 to be reduced to a PG 58-28). If warm mix asphalt (WMA) technology is utilized and production temperatures do not exceed 275 °F (135 °C), the high and low virgin asphalt binder grades shall each be reduced by one grade when FRAP/RAS ABR exceeds 25 percent (i.e. 26 percent ABR would require a virgin asphalt binder grade of PG 64-22 to be reduced to a PG 58-28).

3/ For SMA the FRAP/RAS ABR shall not exceed 20 percent.

4/ For IL-4.75 mix the FRAP/RAS ABR shall not exceed 30 percent.

1031.07 HMA Mix Designs. At the Contractor's option, HMA mixtures may be constructed utilizing RAP/FRAP and/or RAS material meeting the detailed requirements specified herein.

(a) RAP/FRAP and/or RAS. RAP/FRAP and/or RAS mix designs shall be submitted for verification. If additional RAP/FRAP and/or RAS stockpiles are tested and found that no more than 20 percent of the results, as defined under "Testing" herein, are outside of the control tolerances set for the original RAP/FRAP and/or RAS stockpile and HMA mix design, and meets all of the requirements herein, the additional RAP/FRAP and/or RAS stockpiles may be used in the original mix design at the percent previously verified.

(b) RAS. Type 1 and Type 2 RAS are not interchangeable in a mix design.

The RAP, FRAP, and RAS stone bulk specific gravities (G_{sb}) shall be according to the "Determination of Aggregate Bulk (Dry) Specific Gravity (G_{sb}) of Reclaimed Asphalt Pavement (RAP) and Reclaimed Asphalt Shingles (RAS)" procedure in the Department's Manual of Test Procedures for Materials.

1031.08 HMA Production. HMA production utilizing RAP/FRAP and/or RAS shall be as follows.

(a) RAP/FRAP. The coarse aggregate in all RAP/FRAP used shall be equal to or less than the nominal maximum size requirement for the HMA mixture being produced.

To remove or reduce agglomerated material, a scalping screen, gator, crushing unit, or comparable sizing device approved by the Engineer shall be used in the RAP feed system to remove or reduce oversized material.

If the RAP/FRAP control tolerances or QC/QA test results require corrective action, the Contractor shall cease production of the mixture containing RAP/FRAP and either switch to the virgin aggregate design or submit a new RAP/FRAP design.

(b) RAS. RAS shall be incorporated into the HMA mixture either by a separate weight depletion system or by using the RAP weigh belt. Either feed system shall be interlocked with the aggregate feed or weigh system to maintain correct proportions for all rates of production and batch sizes. The portion of RAS shall be controlled accurately to within ± 0.5 percent of the amount of RAS utilized. When using the weight depletion system, flow indicators or sensing devices shall be provided and interlocked with the plant controls such that the mixture production is halted when RAS flow is interrupted.

(c) RAP/FRAP and/or RAS. HMA plants utilizing RAP/FRAP and/or RAS shall be capable of automatically recording and printing the following information.

(1) Dryer Drum Plants.

a. Date, month, year, and time to the nearest minute for each print.

b. HMA mix number assigned by the Department.

c. Accumulated weight of dry aggregate (combined or individual) in tons (metric tons) to the nearest 0.1 ton (0.1 metric ton).

d. Accumulated dry weight of RAP/FRAP/RAS in tons (metric tons) to the nearest 0.1 ton (0.1 metric ton).

e. Accumulated mineral filler in revolutions, tons (metric tons), etc. to the nearest 0.1 unit.

f. Accumulated asphalt binder in gallons (liters), tons (metric tons), etc. to the nearest 0.1 unit.

g. Residual asphalt binder in the RAP/FRAP material as a percent of the total mix to the nearest 0.1 percent.

h. Aggregate and RAP/FRAP moisture compensators in percent as set on the control panel. (Required when accumulated or individual aggregate and RAP/FRAP are printed in wet condition.)

(2) Batch Plants.

a. Date, month, year, and time to the nearest minute for each print.

b. HMA mix number assigned by the Department.

c. Individual virgin aggregate hot bin batch weights to the nearest pound (kilogram).

d. Mineral filler weight to the nearest pound (kilogram).

e. RAP/FRAP/RAS weight to the nearest pound (kilogram).

f. Virgin asphalt binder weight to the nearest pound (kilogram).

g. Residual asphalt binder in the RAP/FRAP/RAS material as a percent of the total mix to the nearest 0.1 percent.

The printouts shall be maintained in a file at the plant for a minimum of one year or as directed by the Engineer and shall be made available upon request. The printing system will be inspected by the Engineer prior to production and verified at the beginning of each construction season thereafter.

1031.09 RAP in Aggregate Surface Course and Aggregate Wedge Shoulders, Type B. The use of RAP in aggregate surface course (temporary access entrances only) and aggregate wedge shoulders, Type B shall be as follows.

(a) Stockpiles and Testing. RAP stockpiles may be any of those listed in Article 1031.02, except “Non-Quality” and “FRAP”. The testing requirements of Article 1031.03 shall not apply. RAP used shall be according to the current Central Bureau of Materials Policy Memorandum, “Reclaimed Asphalt Pavement (RAP) for Aggregate Applications”.

(b) Gradation. One hundred percent of the RAP material shall pass the 1 1/2 in. (37.5 mm) sieve. The RAP material shall be reasonably well graded from coarse to fine. RAP material that is gap-graded or single sized will not be accepted.”

80306

STEEL COST ADJUSTMENT (BDE)

Effective: April 2, 2004
Revised: August 1, 2017

Description. Steel cost adjustments will be made to provide additional compensation to the Contractor, or a credit to the Department, for fluctuations in steel prices when optioned by the Contractor. The bidder shall indicate with their bid whether or not this special provision will be part of the contract. Failure to indicate "Yes" for any item of work will make that item of steel exempt from steel cost adjustment.

Types of Steel Products. An adjustment will be made for fluctuations in the cost of steel used in the manufacture of the following items:

Metal Piling (excluding temporary sheet piling)
Structural Steel
Reinforcing Steel

Other steel materials such as dowel bars, tie bars, mesh reinforcement, guardrail, steel traffic signal and light poles, towers and mast arms, metal railings (excluding wire fence), and frames and grates will be subject to a steel cost adjustment when the pay items they are used in have a contract value of $10,000 or greater.

The adjustments shall apply to the above items when they are part of the original proposed construction, or added as extra work and paid for by agreed unit prices. The adjustments shall not apply when the item is added as extra work and paid for at a lump sum price or by force account.

Documentation. Sufficient documentation shall be furnished to the Engineer to verify the following:

(a) The dates and quantity of steel, in lb (kg), shipped from the mill to the fabricator.

(b) The quantity of steel, in lb (kg), incorporated into the various items of work covered by this special provision. The Department reserves the right to verify submitted quantities.

Method of Adjustment. Steel cost adjustments will be computed as follows:

$SCA = Q \times D$

Where: SCA = steel cost adjustment, in dollars
Q = quantity of steel incorporated into the work, in lb (kg)
D = price factor, in dollars per lb (kg)

$D = MPI_M - MPI_L$

Where: MPI_M = The Materials Cost Index for steel as published by the Engineering News-Record for the month the steel is shipped from the mill. The indices will be converted from dollars per 100 lb to dollars per lb (kg).

MPI_L = The Materials Cost Index for steel as published by the Engineering News-Record for the month prior to the letting for work paid for at the contract price; or for the month the agreed unit price letter is submitted by the Contractor for extra work paid for by agreed unit price,. The indices will be converted from dollars per 100 lb to dollars per lb (kg).

The unit weights (masses) of steel that will be used to calculate the steel cost adjustment for the various items are shown in the attached table.

No steel cost adjustment will be made for any products manufactured from steel having a mill shipping date prior to the letting date.

If the Contractor fails to provide the required documentation, the method of adjustment will be calculated as described above; however, the MPI_M will be based on the date the steel arrives at the job site. In this case, an adjustment will only be made when there is a decrease in steel costs.

Basis of Payment. Steel cost adjustments may be positive or negative but will only be made when there is a difference between the MPI_L and MPI_M in excess of five percent, as calculated by:

$$\text{Percent Difference} = \{(MPI_L - MPI_M) \div MPI_L\} \times 100$$

Steel cost adjustments will be calculated by the Engineer and will be paid or deducted when all other contract requirements for the items of work are satisfied. Adjustments will only be made for fluctuations in the cost of the steel as described herein. No adjustment will be made for changes in the cost of manufacturing, fabrication, shipping, storage, etc.

The adjustments shall not apply during contract time subject to liquidated damages for completion of the entire contract.

Attachment

Item	Unit Mass (Weight)
Metal Piling (excluding temporary sheet piling)	
Furnishing Metal Pile Shells 12 in. (305 mm), 0.179 in. (3.80 mm) wall thickness)	23 lb/ft (34 kg/m)
Furnishing Metal Pile Shells 12 in. (305 mm), 0.250 in. (6.35 mm) wall thickness)	32 lb/ft (48 kg/m)
Furnishing Metal Pile Shells 14 in. (356 mm), 0.250 in. (6.35 mm) wall thickness)	37 lb/ft (55 kg/m)
Other piling	See plans
Structural Steel	See plans for weights (masses)
Reinforcing Steel	See plans for weights (masses)
Dowel Bars and Tie Bars	6 lb (3 kg) each
Mesh Reinforcement	63 lb/100 sq ft (310 kg/sq m)
Guardrail	
Steel Plate Beam Guardrail, Type A w/steel posts	20 lb/ft (30 kg/m)
Steel Plate Beam Guardrail, Type B w/steel posts	30 lb/ft (45 kg/m)
Steel Plate Beam Guardrail, Types A and B w/wood posts	8 lb/ft (12 kg/m)
Steel Plate Beam Guardrail, Type 2	305 lb (140 kg) each
Steel Plate Beam Guardrail, Type 6	1260 lb (570 kg) each
Traffic Barrier Terminal, Type 1 Special (Tangent)	730 lb (330 kg) each
Traffic Barrier Terminal, Type 1 Special (Flared)	410 lb (185 kg) each
Steel Traffic Signal and Light Poles, Towers and Mast Arms	
Traffic Signal Post	11 lb/ft (16 kg/m)
Light Pole, Tenon Mount and Twin Mount, 30 - 40 ft (9 – 12 m)	14 lb/ft (21 kg/m)
Light Pole, Tenon Mount and Twin Mount, 45 - 55 ft (13.5 – 16.5 m)	21 lb/ft (31 kg/m)
Light Pole w/Mast Arm, 30 - 50 ft (9 – 15.2 m)	13 lb/ft (19 kg/m)
Light Pole w/Mast Arm, 55 - 60 ft (16.5 – 18 m)	19 lb/ft (28 kg/m)
Light Tower w/Luminaire Mount, 80 - 110 ft (24 – 33.5 m)	31 lb/ft (46 kg/m)
Light Tower w/Luminaire Mount, 120 - 140 ft (36.5 – 42.5 m)	65 lb/ft (97 kg/m)
Light Tower w/Luminaire Mount, 150 - 160 ft (45.5 – 48.5 m)	80 lb/ft (119 kg/m)
Metal Railings (excluding wire fence)	
Steel Railing, Type SM	64 lb/ft (95 kg/m)
Steel Railing, Type S-1	39 lb/ft (58 kg/m)
Steel Railing, Type T-1	53 lb/ft (79 kg/m)
Steel Bridge Rail	52 lb/ft (77 kg/m)
Frames and Grates	
Frame	250 lb (115 kg)
Lids and Grates	150 lb (70 kg)

SUBCONTRACTOR AND DBE PAYMENT REPORTING (BDE)

Effective: April 2, 2018

Add the following to Section 109 of the Standard Specifications.

"**109.14 Subcontractor and Disadvantaged Business Enterprise Payment Reporting.** The Contractor shall report all payments made to the following parties:

(a) first tier subcontractors;

(b) lower tier subcontractors affecting disadvantaged business enterprise (DBE) goal credit;

(c) material suppliers or trucking firms that are part of the Contractor's submitted DBE utilization plan.

The report shall be made through the Department's on-line subcontractor payment reporting system within 21 days of making the payment."

80397

SUBCONTRACTOR MOBILIZATION PAYMENTS (BDE)

Effective: November 2, 2017

Replace the second paragraph of Article 109.12 of the Standard Specifications with the following:

"This mobilization payment shall be made at least 14 days prior to the subcontractor starting work. The amount paid shall be at the following percentage of the amount of the subcontract reported on form BC 260A submitted for the approval of the subcontractor's work.

Value of Subcontract Reported on Form BC 260A	Mobilization Percentage
Less than $10,000	25%
$10,000 to less than $20,000	20%
$20,000 to less than $40,000	18%
$40,000 to less than $60,000	16%
$60,000 to less than $80,000	14%
$80,000 to less than $100,000	12%
$100,000 to less than $250,000	10%
$250,000 to less than $500,000	9%
$500,000 to $750,000	8%
Over $750,000	7%"

80391

WEEKLY DBE TRUCKING REPORTS (BDE)

Effective: June 2, 2012
Revised: April 2, 2015

The Contractor shall submit a weekly report of Disadvantaged Business Enterprise (DBE) trucks hired by the Contractor or subcontractors (i.e. not owned by the Contractor or subcontractors) that are used for DBE goal credit.

The report shall be submitted to the Engineer on Department form "SBE 723" within ten business days following the reporting period. The reporting period shall be Monday through Sunday for each week reportable trucking activities occur.

Any costs associated with providing weekly DBE trucking reports shall be considered as included in the contract unit prices bid for the various items of work involved and no additional compensation will be allowed.

80302

DISTRICT 3 SPECIAL PROVISIONS
FOR SPEC BOOK ADOPTED APRIL 1, 2016

ROUTE The Reserve at Hudson Crossing – Roadway Improvements
SECTION 18-00053-00-FP
COUNTY Kendall

CONTRACT NO. _____
RETURN TO. _____

DIVISION 100 – GENERAL REQUIREMENTS AND COVENANTS

√			REV. COPY ATT.
√	1A	**TITLE SHEET** Include in all contracts.	
√	1B	**STATUS OF UTILITIES TO BE ADJUSTED** When adjustment is anticipated. Consult Project Support Engineer to verify status of adjustments prior to submitting PS&E.	
	1C	**REPAIR AND MAINTENANCE OF HAUL ROADS** Use with Haul Roads Special Provision.	
	1D	**HAUL ROADS** Use when the use of Haul Roads are indicated through coordination with local agencies.	
√	1E	**DUST CONTROL** Consider using in urban areas or other areas where dust problems are anticipated.	
	1F	**INCENTIVE PAYMENT PLAN NO. 1** This special is to be used on contracts with an approved incentive payment plan where all work is to be completed by a specific date. (See BDE Manual Section 66-2.04.)	
	1G	**INCENTIVE PAYMENT PLAN NO. 2** This special is to be used on contracts with an approved incentive payment plan where the roadway is to be open to traffic by a specific date. (See BDE Manual Section 66-2.04.)	
	1H	**WETLAND AREAS** Include in all projects with wetlands. Plans must show temporary fence and perimeter erosion barrier locations.	
	1I	**MAINTENANCE (CORPS OF ENGINEERS NWP # 3)** This is an example and the final permit might look different. The Unit Chief should obtain the proper special provision from the Bridge and Hydraulic Unit. Always include drawings in the plans as described in designer notes.	
	1J	**TEMPORARY CONSTRUCTION / WATERWAY PERMITS (CORPS OF ENGINEERS)** This is an example and the final permit might look different. The Unit Chief should obtain the proper special provision from the Bridge and Hydraulic Unit. Always include drawings in the plans as described in designer notes.	
	1K	**TEMPORARY CONSTRUCTION / WATERWAY PERMITS (IDNR)** This is just an example and the final permit might look different. The Unit Chief should obtain the proper special provision from the Bridge and Hydraulic Unit.	
	1L	**COMPLETION DATE** Consider on interstate, urban and other time sensitive projects.	
	1M	**DELAYED START OF MULTIPLE CONTRACTS** Insert date for completion	
	1N	**EQUIPMENT ON STRUCTURES WITH LEGAL LOAD LIMITS** Use with load posted Structures. Place the following note under COMMITMENTS on the plans and include the information in the Commitment File STRUCTURE NO. IS RESTRICTED TO LEGAL LOADS ONLY.	
√	1O	**COOPERATION BY CONTRACTOR** This special provision shall be included on all projects with a cost estimate of $5 million or more.	
	1P	**COMPLETION DATE PLUS WORKING DAYS** Consider on interstate, urban and other time sensitive projects.	
	1Q	**ROAD CLOSURE REQUIREMENTS AND COMPLETION DATE** Use when closing the road with Completion Date plus Working Days.	
	1R	**INSPECTION FOR BATS** This special should be included in any projects with culverts more than four feet high, bridges, structures, or buildings which could provide a habitat for any species of bat. Read special provision for more detailed requirements.	

DISTRICT 3 SPECIAL PROVISIONS
FOR SPEC BOOK ADOPTED APRIL 1, 2016

DIVISION 200 – EARTHWORK, LANDSCAPING, AND EROSION CONTROL

	2A	**EXCAVATING AND GRADING EXISTING SHOULDER** To be used on projects lacking environmental clearance, where removal of excavated material from the jobsite is prohibited.	
	2B	**BORROW AND FURNISHED EXCAVATION** To be used when requested by Bureau of Project Implementation.	
	2C	**FURNISHED EXCAVATION** To be used on all projects involving earthwork compaction and truck count measurements.	
√	2D	**EMBANKMENT** To be included on all projects involving earthwork compaction when measurement will be other than truck count.	
√	2E	**EXPLORATION TRENCH, SPECIAL** To be used on projects containing the pay item Exploration Trench, Special.	
	2F	**MULCH METHOD 2** To be used on all contracts with mulch.	
	2H	**ROCK FILL** For replacement of unsuitable materials under box culverts, use Pay Item Z0054400 Rock Fill	

DIVISION 300 – SUBGRADES, SUBBASES, AND BASE COURSES

	3A	**AGGREGATE SUBGRADE IMPROVEMENT (DISTRICT 3)** Do not use the BDE special provision, this one replaces it. Must obtain prior approval from Materials if using a thickness less than 12” or greater than 24”. Must include BDE Special Provision for Reclaimed Asphalt Pavement (RAP) and Reclaimed Asphalt Pavement (RAS). Underdrains are required when using this pay item and are paid for separately. Pay for Geotextile Fabric for Ground Stabilization as a separate pay item if used	

DIVISION 400 – SURFACE COURSES, PAVEMENTS, REHABILITATION, AND SHOULDERS

	4A	**AGGREGATE SURFACE COURSE, TYPE B** Use in contracts with this pay item	
	4B	**PAVEMENT PATCHING** Include in all contracts with Class A or Class B patching.	
	4C	**GROWTH CURVE** Use when requested by the Bureau of Materials.	
	4D	**HOT-MIX ASPHALT SURFACE REMOVAL,SPECIAL** To be used when removing deteriorated HMA along centerline or widening joints.	
	4E	**CONSTRUCTION SEQUENCE FOR JOINT TRIMMING** Use when requested by the Bureau of Materials	
	4F	**SURFACE COURSE PAVING SEQUENCE** This special provision is to be included on contracts with two lane two-way traffic and a proposed HMA overlay greater than four miles in length.	
	4G	**VIBRATORY ROLLER RESTRICTION** Place into all HMA contracts (except PFP) where resurfacing locations include bridge decks and urban areas that may include aging infrastructure under the roadway where vibrations could cause damage.	
√	4H	**PORTLAND CEMENT CONCRETE PAVING REQUIREMENTS** To be used on small paving projects where there is insufficient room for a complete paving train.	
	4J	**CROSSING STRUCTURES WITH MATERIAL TRANSFER DEVICE** Include on all projects using a Material Transfer Device that have a structure within the project limits. The Designer shall coordinate the analysis with the Bureau of Bridges and Structures and list the Structure Numbers.	

	4K	**AGGREGATE SHOULDER TYPE B** Include on widening and/or resurfacing contracts where aggregate shoulders 6 in. (150 mm) or thicker are to be constructed.	
	4L	**APPROACH SLAB REPAIR** - To be used on projects with approach slab repair.	
	4M	**AGGREGATE SHOULDER TYPE B – RAP** Special provision shall be included only on projects where the paved shoulder width is less than 3 ft. (910 mm).	
	4N	**HOT-MIX ASPHALT PAVEMENT PATCHING (PARTIAL DEPTH)** Designer must fill in the proposed removal depth and the binder course N number.	
	4O	**RUMBLE STRIP AT INTERSECTIONS** Include CADD Detail 440-3 for Rumble Strip in the plans.	
	4P	**RAISED JOINT REMOVAL** To be used on all contracts with Raised Joint Removal.	
	4S	**STRINGLESS CONSTRUCTION OPTION** If requested by the Bureau of Construction.	

DIVISION 500 - STRUCTURES

	5B	**RUBBED FINISH (MODIFIED)** This special should be used on bridges in high visible areas.	
	5C	**STORM SEWER, RUBBER GASKET** This item is included to satisfy EPA requirements for horizontal and vertical separation of storm sewer and water mains or water service lines outlined in Section 41 of the Standard Specifications for Water and Sewer Main Construction in Illinois. Note: Placement of storm sewer above water main with less than 18" vertical separation is NOT ALLOWED. This type of joint is required for at least 10 ft (3 m) on each side of the crossing; however, pipe material is to be changed only at catch basins, inlets or manholes. Storm Sewer, Rubber Gasket, is a 550 or M550 Code Number.	
√	5D	**STORM SEWER (WATER MAIN REQUIREMENTS)** This item is included to satisfy EPA requirements for horizontal and vertical separation of storm sewer and water mains. Pipe material is to be changed only at catch basins, inlets, or manholes. Review Standard Specifications for Water and Sewer Main Construction in Illinois to determine requirements based on existing and proposed utilities. See Drawings No. 19 through No. 24.	
√	5E	**STORM SEWER OR CULVERT TO BE FILLED** To be used when abandoning storm sewers or culverts.	
	5F	**BRIDGE DECK LATEX OR MICROSILICA CONCRETE OVERLAY, CUT OFF DATE** This work must also include a completion date no later than November 15 or a traffic control special provision requiring the Contractor to schedule his operations so that all traffic lanes are open from December 1 to March 1. This is per a request from Project Implementation to eliminate lane closures/reductions over winter months.	

DIVISION 600 – INCIDENTAL CONSTRUCTION

	6A	**PERMANENT SURVEY MARKERS** To be used on contracts containing Permanent Survey Markers.	
	6F	**CELLULAR PHONES** Only to be used on large projects at the direction of the Bureau of Project Implementation. An Engineer's Field Office, Type A must also be provided on the Contract.	
	6G	**FRAMES AND LIDS TO BE ADJUSTED (SPECIAL) and WATER VALVES TO BE ADJUSTED, SPECIAL** To be used on all multi-lift resurfacing projects where manholes and/or water valves exist.	
	6H	**SHOULDER STABILIZATION AT GUARDRAIL** Use whenever shoulder stabilization of guardrail is specified.	

DISTRICT 3 SPECIAL PROVISIONS
FOR SPEC BOOK ADOPTED APRIL 1, 2016

DIVISION 700 – TRAFFIC CONTROL

	7A	**TRAFFIC CONTROL PLAN** All contracts including Traffic Control.	
	7B	**WIDTH RESTRICTION SIGN** Include in all projects with width restriction signing	
	7C	**VEHICLE PARKING** Use on interstate projects.	
√	7D	**EQUIPMENT ILLUMINATION** To be used on all contracts.	
	7E	**TEMPORARY BRIDGE TRAFFIC SIGNALS** Contact the Traffic Signal Section of Operations if signals have more than three movements to determine if a chart showing order of signals will be required.	
	7F	**KEEPING ROADS OPEN TO TRAFFIC** 1. To be used on interstates and high volume multi-lane highways. 2. Revise the times of day and work items listed as needed regarding lane closures.	
	7G	**CHANGEABLE MESSAGE SIGN** To be used on interstate and high volume multi-lane highways.	
	7H	**UNEVEN LANES** To be used on applicable interstate and high speed multi-lane highways	
	7I	**TRAFFIC CONTROL SURVEILLANCE** Use on projects where Traffic Control Surveillance is required.	
√	7J	**TRAFFIC CONTROL IN THE VICINTY OF A RAILROAD GRADE CROSSING** Use on all projects with a grade crossing within the job limits. See the Project Support Unit for guidance when a railroad is located near the project limits or crosses a side road near the mainline.	
	7L	**PLASTIC DRUMS** To be used on all interstate projects.	
	7M	**DIRECTION INDICATOR BARRICADES** Only use when direction indicator barricades are specified.	
	7O	**TRAFFIC CONTROL AND PROTECTION, STANDARDS 701400 (SPECIAL) AND 701401 (SPECIAL)** To be used on all interstates. Bureau of Construction will decide which CADD detail option to use in the plans. Also to be used on other routes which have an ADT >25,000.	
	7P	**PORTABLE, VEHICLE MOUNTED, CHANGEABLE MESSAGE SIGN** To be used on all interstate contracts. Also to be used on other routes which have an ADT >25,000.	
	7Q	**ALTERNATE ROUTE SIGNING** To be used on interstates and high volume multi-lane highways when requested by Construction.	
	7R	**MAXIMUM DROP-OFFS FOR TWO-LANE, TWO-WAY TRAFFIC** To be used on 3P two-lane, two-way road projects.	
	7S	**TEMPORARY INFORMATION SIGNING** Use with CADD details 720-8, 720-9, 720-10 or 720-11 in the plans.	

DIVISION 700 – PAVEMENT MARKING

	7AB	**LINEAR DELINEATOR PANELS, 6 INCH** Consider use on bridge parapet walls, qualifying rails, etc.	
	7AC	**TEMPORARY PAINT PAVEMENT MARKING** To be used when requested by the District Construction Engineer.	
	7AE	**PAINT PAVEMENT MARKING – TWO APPLICATIONS** Use on all contracts with Paint Pavement Marking.	

DISTRICT 3 SPECIAL PROVISIONS
FOR SPEC BOOK ADOPTED APRIL 1, 2016

DIVISION 800 - ELECTRICAL

	8A	**LOOP DETECTOR TESTING** Use on all contracts with Detector Loops.	
	8B	**SERVICE INSTALLATION (of the type specified)** Use on all contracts with Service Installation.	
	8D	**INDUCTIVE LOOP DETECTOR** Use on all contracts with Inductive Loop Detector.	
	8E	**FULL ACTUATED CONTROLLER AND TYPE IV CABINET, SPECIAL** Use on all contracts with Full Actuated Controller and Type IV Cabinet, Special.	
	8G	**OPTIMIZE TRAFFIC SIGNAL SYSTEM** Use on all contracts with Optimize Traffic Signal System.	
	8H	**FIBER OPTIC CABLE IN CONDUIT** Use on all contracts with Fiber Optic Cable in Conduit.	
	8I	**RE-OPTIMIZE TRAFFIC SIGNAL SYSTEM** Use on all contracts with Re-optimize Traffic Signal System.	
	8J	**RESTORATION OF WORK AREA** This special provision should only be included on contracts where no other earthwork or seeding is included on the project.	
	8L	**SERVICE INSTALLATION, GROUND MOUNTED** To be used in Urban areas; consult with traffic signal section.	

DIVISION 1000 - MATERIALS

	10A	**QUALITY CONTROL LABORATORY FOR CONCRETE MIXTURES** To be inserted in projects with large quantities of concrete when requested by the Bureau of Materials. The recurring special QC/QA of Concrete Mixtures Special Provision (BDE) must be inserted with this special provision.	
√	10B	**GRANULAR MATERIALS** Insert this special provision on projects where Trench Backfill is required.	

Revised 6-29-17

1A

STATE OF ILLINOIS

SPECIAL PROVISIONS

The following Special Provisions supplement the "Standard Specifications for Road and Bridge Construction, Adopted April 1, 2016", the latest edition of the "Manual on Uniform Traffic Control Devices for Streets and Highways", and the "Manual of Test Procedures for Materials" in effect on the date of invitation for bids, and the "Supplemental Specifications and Recurring Special Provisions" indicated on the Check Sheet included herein, which apply to and govern the construction of The Reserve at Hudson Crossing – Roadway Improvements, Section 18-00053-00-FP in Kendall County, and in case of conflict with any part, or parts, of said Specifications, the said Special Provisions shall take precedence and shall govern.

Contract No.

LOCATION OF PROJECT

The project is contained within W. Washington Street to W. Jefferson Street (South to North) and S. Harrison Street to S. Adams Street (West to East). (See location map)

Latitude: 41.68472 °N
Longitude: 88.35389 °W
Section 17, Township 37N, Range 8E of the 3rd Principle Meridian

DESCRIPTION OF PROJECT

Shodeen Group, L.L.C., is planning to build an apartment complex in the place of two vacant lots as well as 4 existing homes (to be demolished).

The project will also include roadway modifications, water main/services, sanitary main/services and storm sewer construction.

1B

STATUS OF UTILITIES TO BE ADJUSTED:
(Effective January 1, 2007; Revised January 24, 2011)

Name & Address of Utility	Type	Location	Estimated Date Relocation Complete
AT&T 1000 Commerce Drive Oak Brook, IL 60523			
Comcast 688 Industrial Drive Elmhurst, IL 60126			
ComEd 2001 Aucutt Rd Montgomery, IL 60538			
Midwest Fiber Networks 6070 N Flint Rd Glendale, WI 53209			
Nicor Gas 259 Commercial Drive Yorkville, IL 60560			

The above represents the best information of the Department and is only included for the convenience of the bidder. The applicable provisions of Section 102 and Articles 105.07, 107.20, 107.37, 107.38, 107.39, 107.40, and 108.02 of the Standard Specifications for Road and Bridge Construction shall apply.

The estimated utility relocation dates should be part of the progress schedule submitted by the Contractor.

** Above utility relocation information reflected as of February 21, 2019, relocation complete dates are unknown at this time due to right of way acquisitions. Per SB 699 (90 day utility relocation law), once the proposed right of way is clear to award the project, a notice will be sent to the utility companies instructing them to have their facilities relocated within 90 days.

1E

DUST CONTROL--HAULING EARTH, GRANULAR MATERIALS OR WASTE MATERIAL

(Effective November 16, 1993)

In addition to the general requirements of Section 107 of the Standard Specifications, the Contractor shall be required to prepare a plan for pavement cleaning and dust control for this project. A detailed plan outlining specific wetting, tarping, and/or cleaning procedures, or similar dust control methods is to be submitted for approval at the preconstruction meeting.

As required by Chapter 95 1/2, paragraphs 15-109 and 15-109.1 of the Illinois Vehicle Code, no blowing or spillage of material will be allowed during the hauling operations. The specific preventative measures proposed by the Contractor are to be included in the dust control plan.

If, in the opinion of the Engineer, excessive dust is produced during the hauling operations, the hauling shall stop until corrective action is taken.

Approval of the dust control and pavement cleaning procedures will not relieve the Contractor of his responsibility to provide a safe work zone for the traveling public.

No additional compensation will be allowed for dust alleviation.

1O

COOPERATION BY CONTRACTOR

(Effective February 7, 2013)

Replace the 3rd paragraph of Article 105.06 with the following:

> At the preconstruction meeting, the Contractor shall identify one superintendent, who will act as his agent for the entire duration of the project. This shall be a competent, English-speaking person, who will be at the project site at all times when the Contractor or Subcontractor is present. He or she must be capable of reading and thoroughly understanding the plans and specifications and be thoroughly experienced in the type of work being performed. The superintendent, who shall receive instructions from the Engineer or authorized representatives, shall have full authority to execute orders or directions of the Engineer without delay, and to promptly supply such materials, equipment, tools, labor and incidentals as may be required.

2D

EMBANKMENT

(Effective July 1, 1990; Revised January 1, 2007)

This work shall be performed in accordance with Section 205 of the Standard Specifications except that the embankment material shall not be placed and compacted at moisture contents in excess of 110 percent of optimum moisture unless authorized, in writing, by the Engineer.

Topsoil material shall not be placed in the embankment within 12 in. (300 mm) of high type base and surface courses.

2E

EXPLORATION TRENCH, SPECIAL

(Revised January 1, 2007)

This work shall consist of constructing a trench for the purpose of verifying clearances and locations of existing utilities and storm sewers. The exploration trench shall be constructed at the locations directed by the Engineer.

The depth of the trench shall be variable. The width of the trench shall be sufficient to allow proper investigation of the entire trench.

After the trench has been inspected by the Engineer. The excavated material shall be used to backfill the trench in a manner satisfactory to the Engineer. Any excess materials shall be disposed of according to Article 202.03 of the Standard Specifications.

This work will be paid for at the contract unit price per foot (meter) for EXPLORATION TRENCH, SPECIAL.

4H

PORTLAND CEMENT CONCRETE PAVING REQUIREMENTS

(Revised October 4, 2006)

The following requirements supersede those contained in Section 420 of the Standard Specifications:

Article 420.03(c). A mechanical concrete spreader will not be required.

Article 420.03(d). Revise Article 1103.13(b) to read: "The finishing machine shall be of a type approved by the Engineer, shall be self-propelled and shall be capable of striking off, consolidating and finishing concrete of the consistency required by the specifications to the proper crown and grade."

Article 420.03(e). A mechanical longitudinal float will not be required.

Article 420.09. Revise the first paragraph of Article 420.09(a)(1) Vibratory Method. to read:

"After the concrete has been struck off, it shall be given the required consolidation by the vibratory method or by other means which will obtain a uniform and satisfactory density throughout the pavement. If the vibratory method is used, the vibrating impulses shall be applied directly to the concrete through an apparatus especially designed for this purpose and so constructed as to operate satisfactorily ahead of, or as an integral part of, the finishing machine in such a manner that the vibratory impulses are transmitted through the concrete mass with sufficient intensity to consolidate it throughout its entire depth and width. Not more than one pass of the vibratory equipment shall be made over the pavement surface. The Contractor shall have a satisfactory tachometer available for checking the operating frequency of the vibrating elements."

Article 420.09(b). Longitudinal Floating, Hand Method, will be permitted.

5D

STORM SEWER (WATER MAIN REQUIREMENTS)

(Effective July 1, 1990; Revised January 1, 2009)

This work shall consist of constructing storm sewers meeting water main requirements.

Storm Sewer (Water Main Requirements) shall be used at locations where lateral separation between the sewer and water main or water service line is less than 10 feet (3.1 m) and the water main invert is less than 18 inches (457 mm) above the storm sewer crown. Also, Storm Sewer (Water Main Requirements) shall be used where the sewer crosses above the water main or water service line with 18 inches (457 mm) minimum vertical separation.

The storm sewer shall be constructed of

Ductile iron pipe, Class 52 with bell and rubber gasket joint or

Concrete pressure pipe conforming to the latest AWWA Standard C300, C301, C303 or

Plastic pipe meeting the material requirements of Section 40. Pipe for Water Mains and Service Connections of the Standard Specifications for Water and Sewer Main Construction in Illinois and Section 550 of the Standard Specifications.

This work shall be done according to the applicable portions of Sections 550 and 561 of the Standard Specifications.

Method of Measurement. This work will be measured for payment according to Article 550.09 of the Standard Specifications.

Basis of Payment. This work will be paid for at the contract unit price per foot (meter) for STORM SEWER (WATER MAIN REQUIREMENTS), of the diameter specified.

5E

STORM SEWER OR CULVERT TO BE FILLED

(Effective June 13, 1997; Revised January 1, 2007)

Description: This work shall consist of cleaning and then filling storm sewer or culvert pipes to be abandoned.

Materials. The material to fill the pipes shall be Controlled Low Strength Material (CLSM) meeting the requirements of Section 1019 of the Standard Specifications.

Construction Requirements: The inside of the pipe shall be cleaned of all unsuitable material and debris before placing the CLSM. The pipe shall be completely filled. The method used for filling the pipe and containing the CLSM at the pipe ends shall be at the Contractor's option.

The weather and temperature placement requirements of Section 593 of the Standard Specifications shall apply.

Method of Measurement. The volume for payment of CLSM shall be the measured volume in cubic yards (cubic meters) of the culvert to be filled. Cleaning the culvert will not be measured for payment.

Basis of Payment. This work will be paid for at the contract unit price per cubic yard (cubic meter) for CONTROLLED LOW-STRENGTH MATERIAL.

7D

EQUIPMENT ILLUMINATION

(Revised January 26, 1998; Revised January 1, 2016)

The Contractor shall equip all vehicles entering and exiting the work area with flashing amber lights, installed so the illumination is visible from all directions.

7J

TRAFFIC CONTROL IN THE VICINTY OF A RAILROAD GRADE CROSSING

(Effective August 4, 2017)

In accordance with Chapter 8 of the Manual on Uniform Traffic Control Devices (MUTCD):

When a grade crossing exists either within or in the vicinity of a temporary traffic control zone, lane restrictions, flagging (see Chapter 6E of the MUTCD), or other operations shall not be performed in a manner that would cause highway vehicles to stop on the railroad or LRT tracks, unless a flagger or uniformed law enforcement officer is provided at the grade crossing to minimize the possibility of highway vehicles stopping on the tracks, even if automatic warning devices are in place.

See figure 6H-46 and associated notes of the MUTCD regarding the temporary traffic control in the vicinity of the railroad grade crossing.

Basis of Payment**.** The cost of the additional flagger and any additional signs, if necessary, will not be paid for separately, but shall be included in the cost of associated traffic control items.

8B

SERVICE INSTALLATION, of the type specified

(Effective July 1, 1990; Revised January 1, 2007)

In addition to the requirements of Section 805 of the Standard Specifications, this item shall require the Contractor to contact the utility company, prior to beginning work, to determine the utility company regulations relating to electrical service. The Contractor shall provide the utility company an estimated date that the service connection will be required, the agency which will be responsible for monthly service changes, and the connected load for flat rate billing if required. The responsible agency and connected load information is included in the plans. The customer service agreement with the utility company shall be executed by the agency responsible for monthly service charges.

All information furnished to the utility company shall be in writing with a copy provided to the Engineer.

During the interim between the service activation date and signal turn on day, all energy charges for the intersection shall be paid by the Contractor according to Article 109.05 of the Standard Specifications. Beginning the day of the traffic signal turn on, all energy charges for the intersection will be paid by the responsible agency listed in the plans. The Contractor is responsible for making arrangements with the responsible agency to transfer billing to the responsible agency.

This work shall be included in the cost of the SERVICE INSTALLATION, of the type specified.

10B

GRANULAR MATERIALS
(Effective: November 26, 2013; Revised January 1, 2016)

For trench backfill and bedding for pipe culverts and storm sewers, gradations CA 7 or CA 11 may be used, however, the granular material shall be encased in filter fabric. The filter fabric shall be installed according to Article 282 of the Standard Specifications, except that the work will not be measured for payment, but will be included in the cost of the pipe culverts or storm sewers. Lifts for gradations CA 7 or CA 11 may exceed 8 inches (200 mm) in depth provided the material is seated to the satisfaction of the Engineer.

Village of Oswego

SCHEDULE OF MATERIALS				
	Material	**Specification**	**Manufacturer**	**Comments**
SANITARY SEWERS				
Mains, Force	DIP CL52	AWWA C-151	Clow Corp. or equal	
Mains, Gravity	PVC SDR 26, SDR 21	ASTM D3034		Cell Class 12454-C
Manholes, Type A	Precast rein. Conc.	ASTM 478		See FMWRD Specs.
Manhole, Watertight Connections	Flexible Rubber Boots	ASTM C-923		
Manhole, External Wrap	*6" or 9" wide sealing band of rubber and mastic*	*ASTM C-877, type II or type III*		
Manhole Steps	Plastic coated rebar		MA Industries or equal	Model PS-1
Frame	Cast iron	ASTM A-48	Neenah or equal	*No. R-1713 w/ Self Sealing, Concealed Pick Holes*
Lid	Cast Iron	ASTM A-48	Neenah or equal	Marked "Oswego Sanitary"
Services	PVC SDR 26	ASTM D3034		6" Diameter Min.
Joints	Flexible Gasket	ASTM D3212		
Trench Backfill	*CA-7 with 12" cap*	Sec. 20-2.20C		SSWSMC
Air Test-Exfiltration		Sec. 31-1.11		SSWSMC
Televise-Color VHS		Sec. 31-1.11		SSWSMC
Deflection Test-Mandrel		Sec. 31-1.11		SSWSMC
Manhole Vacuum Test		ASTM C1244		FMWRD Specifications
WATER MAINS				
Mains	Duct Iron Pipe CI 52	AWWA C-151	Clow Corp. or equal	Made in USA
	For PVC see 8.304A			
Cement Lined		AWWA C-104		
Joints	Flexible Gasket	ASTM F477 & D3139		
Gate Valve 16" and Under	Ductile Iron	AWWA C-515-01	American Flow Control	A-2370-20, Resilient Wedge
Vault Frame	Cast Iron	ASTM A-48	Neenah or equal	R-1530
Vault Lid	Cast Iron	ASTM A-48	Neenah or equal	Type B Marked "Oswego Water"
Vault, Watertight Connections	*Flexible Rubber Boots*	*ASTMC-923*		
Vault, External Wrap	*9"(min) wide sealing band of rubber and mastic*	*ASTM C-877, type II or type III*		
Valve Box Lid	Cast Iron	ASTM A-48	Clow Corp.	F-2493
Hydrants	Cast Iron	AWWA C-502	Waterous Pacer, *Clow Medallion*	*Waterous Pacer* Model #67-250
Hydrant Brace	Steel		BLR Enterprises, Inc.	Gray iron top

Hydrant Trench Adapter	Polyethylene		American Flow Control	
Main Fittings	Ductile Iron	AWWA C-110		Compression
Services	Copper Type K	ASTM B-88 & B-251	Clow Corp. or equal	Compression
Corp. Stop	Brass		A Y McDonald	
Pressure Test		AWWA C-600 AWWA C-603		
Disinfection		AWWA C-651-92		
Curb Stop	Brass		A Y McDonald	Minneapolis Pattern
Curb Box	Cast Iron		A Y McDonald	Cap Marked "Water"
Tapping Sleeves	*Ductile type*		*A Y McDonald*	*C-NS-2*
	Stainless Steel (full body)		*A Y McDonald*	*C-SC-2*
Joints, Mains	M.J. or Push-on	AWWA C-111		Brass wedges will not be required.
Joints, Services	Compression			
Trench Backfill	*CA-7 with 12" cap*	Sec. 20-2.20C		SSWSMC
STORM SEWER				**IDOT STANDARDS**
Mains	Reinf. Conc. Pipe	ASTM C-76		ASTM C-443 Joints
Inlet Frame	Cast Iron	ASTM A-48	Neenah or equal	B6.12 curb R-3281-A, B6.18 curb R-3278-A, Depressed B6.12 R-3506-AZ, rear yard "beehive" R-4340-B M3.12 curb R-3501-P
Manholes, Type A	Precast reinf. Conc.	ASTM 478		
Manhole Frame, Type 1	Cast iron	ASTM A-48	Neenah or equal	No. R-1713
Manhole Lids (closed)	Cast iron	ASTM A-48	Neenah or equal	Type B marked "Oswego Storm"
Manhole Steps	Plastic coated rebar		MA Industries or equal	Model PS-1
Pipe Drains	PVC	ASTM F-679		6" Diameter
Trench Backfill	*CA-7 with 1 2" CA-6 cap*	Sec-20-2.20C		SSWSMC
Catch Basin and Inlet Frames	Cast Iron	ASTM A-48	Neenah or equal	See above inlet types
Pipe Culvert		Sec. 511		IDOT standard specs.
Sump Pump Line	*PVC SDR 26*	ASTM D3034		
Junction Box Frame & Lid (marked "Sump")	Cast Iron	ASTMA A-48	Neenah or Equal	R-2525-E (Med.)
Internal Filters, chimney seals			Marathon Materials	
Street Light Poles				
Minor and Local Streets (300' max. spacing)	Concrete		Centrecon, Inc.	#MEO-6 MOAD-4 Finish #114
Major and Collector Streets	Concrete		Centrecon, Inc.	#MEO-9 MOAD-9 Finish #114

Luminaire			General Electric	GEH-6009B Evolve LED Roadway Light
Photocell			Tork	No. 2007

Note: IDOT = Illinois Department of Transportation
SSWSMC = Standard Specifications for Water and Sewer Main Construction in Illinois
FMWRD = Fox Metro Water Reclamation District
AWWA = American Water Works Association
ASTM = American Society for Testing and Materials

Manufacturer's catalog or model numbers are subject to change and the numbers provided in this Schedule may be obsolete. The Village reserves the right to specify similar or approved equal materials.

VILLAGE OF OSWEGO

THE RESERVE AT HUDSON CROSSING – ROADWAY IMPROVEMENTS

INDEX OF SPECIAL PROVISIONS

SECTION 18-00053-00-FP

SPECIAL PROVISIONS – BLR 11310 4
PROJECT SPECIAL PROVISIONS 5
DESCRIPTION OF WORK 5
LOCATION OF WORK 5
COMPLETION DATE 5
CONSTRUCTION SEQUENCE 5
WORK HOURS 5
CHANGE OF QUANTITIES 6
APPLICATION FOR PAYMENT 6
PREVAILING WAGE REQUIREMENTS 6
PROTECTION AND RESTORATION OF PROPERTY 7
CONSTRUCTION ACCESS, NOTIFICATIONS, PHASING 7
ILLINOIS DEPARTMENT OF TRANSPORTATION PERMIT 8
WORK WITHIN FLOODPLAIN AND FLOODWAY 8
BENCHMARKS 8
MAINTAINING ACCESS TO HUDSON CROSSING PARK 8
MAINTENANCE OF ROADWAYS 8
STREET SWEEPING & PREPARATION 8
SAW CUTTING 9
TRENCH BACKFILL 9
ROCK EXCAVATION 9
FURNISHED EXCAVATION 9
PORTLAND CEMENT CONCRETE CURING AND PROTECTION 10
CONNECTION TO EXISTING UTILITY STRUCTURES, EXCLUDING WATER MAIN 10
SEWER LINE STUBS 10
RAILROAD PROTECTIVE LIABILITY INSURANCE 10

HYDROSTATIC TESTS AND DISINFECTION OF THE WATER MAIN 11
WATER MAIN ABANDONMENT 12
REMOVE EXISTING FLARED END SECTION 13
BRICK SIDEWALK REMOVAL 14
REINSTALL SALVAGED BRICK SIDEWALK 14
BRICK PAVEMENT 15
BRICK SIDEWALK 15
POLYUREA PAVEMENT MARKINGS 16
SANITARY SEWER REMOVAL 16
SANITARY SEWER, JACK AND BORE 16
CONNECTION TO EXISTING WATER MAIN 19
TYPE 1 FRAMES WITH CLOSED LIDS (FOR STORM SEWER MANHOLES, SANITARY SEWER MANHOLES AND VALVE VAULTS) 20
FIRE HYDRANT COMPLETE 20
VALVE VAULTS TO BE REMOVED 21
HOT-MIX ASPHALT DRIVEWAY PAVEMENT 22
FENCE REMOVAL 22
COLUMN REMOVAL 23
ORNAMENTAL FENCE 23
STONE FENCE COLUMN 24
STONE ARCH COLUMN 24
STEEL CASINGS 25
WATER MAIN 26
ADJUSTING WATER MAIN, SPECIAL 27
WATER SERVICE LINE, SPECIAL 28
VALVE VAULT 29
VALVE BOX 30
FIRE HYDRANT TO BE REMOVED 30
REMOVE & RESET MAILBOX 31
STREET LIGHT TO BE PAINTED 31
SANITARY SEWER 32
GREASE INTERCEPTOR – 1500 GAL 35
SANITARY SERVICE 36
TRENCH DRAIN - PATIO 38
TRENCH DRAIN - PAVEMENT 39

PORTLAND CEMENT CONCRETE STEPS 40
INTERGRAL BARRIER WALL AND SIDEWALK 41
SEGMENTAL CONCRETE BLOCK RETAINING WALL 43
ABANDON AND FILL EXISTING STORM SEWER 45
CLASS “D” PATCH, SPECIAL 46
HOT-MIX ASPHALT BIKE PATH 46
BOLLARD 47
REMOVE & RELOCATE SIGN 47
DECORATIVE SIGN POLE 48
PRECAST CONCRET TRANSFORMER PAD 48
PRECAST CONCRETE SWITCHGEAR PAD 49
ELECTRIC SPLICE BOX 49
CONNECTION TO EXISTING UTILITY POLE 49
TRAFFIC CONTROL AND PROTECTION, SPECIAL 50
EXPLORATION EXCAVATION (UTILITY) 52
GFCI, 20 AMP, DUPLEX RECEPTACLE 52
OUTLET SPECIAL 53
HANDHOLE, COMPOSITE CONCRETE (SPECIAL) 54
LIGHT POLE FOUNDATION, 24” DIAMETER, OFFSET 54
LIGHTING STANDARD, TYPE 1 55
LIGHTING STANDARD, TYPE 2 55
LUMINAIRE, LED, SPECIAL 56
MAINTENANCE OF LIGHTING SYSTEM 56
RELOCATE EXISTING LIGHTING UNIT 59
REMOVE EXISTING CABLE 60
REMOVAL OF LIGHTING CONTROLLER FOUNDATION 61
REMOVAL OF LIGHTING CONTROLLER 61
REMOVAL OF ELECTRIC SERVICE INSTALLATION 62
REMOVAL OF LIGHTING LUMINAIRE, SALVAGE 62

Illinois Department of Transportation

Special Provisions

Local Public Agency	County	Section Number
Village of Oswego	Kendall	18-00053-00-FP

The following Special Provision supplement the "Standard Specifications for Road and Bridge Construction", adopted April 1, 2016, the latest edition of the "Manual on Uniform Traffic Control Devices for Streets and Highways", and the "Manual of Test Procedures of Materials" in effect on the date of invitation of bids, and the Supplemental Specification and Recurring Special Provisions indicated on the Check Sheet included here in which apply to and govern the construction of the above named section, and in case of conflict with any parts, or parts of said Specifications, the said Special Provisions shall take precedence and shall govern.

PROJECT SPECIAL PROVISIONS

The following Special Provisions supplement the "Standard Specifications for the Road and Bridge Construction", adopted April 1, 2016, the "Supplemental Specifications and Recurring Special Provisions", adopted January 1, 2019 (as indicated on the check sheet included herein), and the latest edition of the "Illinois Manual on Uniform Traffic Control Devices for Streets and Highways", as well as the “Standard Specifications for Water and Sewer Construction in Illinois” in effect on the date of invitation for bids. These special provisions included herein apply to and govern the proposed improvement designated as “The Reserve at Hudson Crossing” and in case of conflict with any part or parts of said specifications; said special provisions shall take precedence and shall govern.

The Village of Oswego reserves the right to award or reject the bid in whole or in part and to award or reject the alternates.

DESCRIPTION OF WORK

Project includes the construction of two apartment buildings on adjacent lots, near 59 S. Adams Street, Oswego, IL. Work will also include roadway modifications, water main/services, sanitary main/services, storm sewer construction; and all other appurtenant work and materials necessary to complete the project in accordance with the plans, standard specifications and these Special Provisions.

LOCATION OF WORK

This project is located in near 59 S. Adams Street in the Village of Oswego, Kendall County, Illinois, as shown on the Project Location Map. The total area of improvement is approximately 153,680 square feet or 3.528 acres.

COMPLETION DATE

All substantial work shall be completed by **November 15, 2019** excluding the defined alternates. In case of failure to complete the work on time the provisions of Article 108.09 of the “Standard Specifications” shall apply.

CONSTRUCTION SEQUENCE

A construction sequencing plan shall be agreed upon by all shareholders prior to the execution of the contract.

WORK HOURS

The Contractor must adhere to the Village of Oswego ordinance work time schedule. Construction work may be performed Monday thru Friday during the hours of 6:00 a.m. to 8:00 p.m., Saturday during the

hours of 7:00 a.m. to 6:00 p.m. and Sunday during the hours of 9:00 a.m. to 5:00 p.m. No work may be performed prior or beyond these periods without prior written approval from the Village.

CHANGE OF QUANTITIES

The BLR 12200a, Schedule of Prices form provided, is a listing of pay items of work to be completed. However, the awarding authority reserves the right to increase or decrease the scope of work to be completed under the contract. No allowance will be made for delay or anticipated profits as the result of an increase or decrease in the quantities of work to be performed.

APPLICATION FOR PAYMENT

Application for payment to the Contractor shall be in accordance with the Standard Specifications and these Special Provisions. The Engineer will submit Engineer's Payment Estimate for partial payment to the Contractor for the work completed to the Village not more than once monthly on a date specified by the Village.

The Contractor shall procure from each subcontractor and supplier of material or labor a waiver of any claim which they may have under the mechanics lien laws of the state in which the work is located, to insure the Village immunity from mechanics liens on subcontractors in carrying out the contract and any work orders for additions thereto, all as a condition of any payment by the Village. Any payments made by the Village without requiring compliance with this paragraph shall not be construed as a Waiver by the Village of the right to require compliance with this paragraph as a condition to later payments.

The Contractor shall submit Partial Waivers of Lien from all subcontractors and suppliers with each partial payment estimate and Contractor's Affidavit for subcontractors and suppliers with second payment request for the previous payment estimates and then with all subsequent payment estimates. The Contractor shall furnish with his final application for payment a complete release of all liens arising out of this contract, or receipts in full in lieu thereof and an affidavit that the releases and receipts include all labor and material for which a lien could be filed.

The Contractor shall submit four (4) original signed copies of the following documents with each application for payment: AIA Form G702 – Application and Certificate for Payment, AIAG703 – Continuation Sheet, Contractor's Affidavit and Waivers of Lien as described above and Certified Payroll reports for all contractors working during the payment period. The Contractor shall also submit an updated construction schedule with each Application for Payment.

PREVAILING WAGE REQUIREMENTS

This contract calls for the construction of a "public work", within the meaning of the Illinois Prevailing Wage Act, 820 ILCS 130/.01 et seq ("the Act"). The Act requires contractors and subcontractors to pay laborers, workers and mechanics performing services on public works projects no less than the "prevailing rate of wages" (hourly cash wages plus fringe benefits) in the county where the work is performed. For information regarding current prevailing wage rates, please refer to the Illinois Department of Labor's website at: www.illinois.gov/idol/Pages/default.aspx. All contractors and

subcontractors rendering services under this contract must comply with all requirements of the Act, including but not limited to, all wage, notice and record keeping duties.

PROTECTION AND RESTORATION OF PROPERTY

The Contractor shall take all necessary precautions for the protection of public and private property. The Contractor is responsible for the damage or destruction of property resulting from neglect, staging, storage, stockpiling of equipment or materials, misconduct or omission in his/her manner or method of execution or non-execution of the work, or caused by defective work or the use of unsatisfactory materials and such responsibility shall not be released until the work has been completed and accepted and the requirements of these specifications complied with.

Whenever public or private property is so damaged or destroyed, the contractor shall, at their expense, restore such property to a condition equal to that which existed prior to such damage or injury by repairing, rebuilding or replacing it as may be directed, or he shall otherwise make good such damage or destruction in an acceptable manner. If he fails to do so, the Village will withhold any payouts toward completed work until arrangements are made to correct any damage as described above.

CONSTRUCTION ACCESS, NOTIFICATIONS, PHASING

This work shall consist of preparation and distribution of notices and verbal notification to the public throughout the project area as outlined below:

Pre-construction and progress notices: Prior to the start of construction and at the start of each phase the Contractor shall prepare written notices detailing the work to be completed, duration, and contact information of a representative who will be responsible for addressing issues that may arise due to construction. Samples of written notices shall be submitted to the Engineer for approval.

Access restrictions: If access to a driveway will be restricted due to construction activities the Contractor shall give residents and businesses proper written notification at least 48 hours in advance. The Contractor shall provide them the opportunity to remove vehicles or make other arrangements. Samples of written notices shall be submitted to the Engineer for approval.

In addition, the Contractor shall be responsible for notifying residents and businesses verbally on the day of the access restrictions (i.e., knock on doors when driveways are about to be closed), to ensure awareness on the lack of access.

The Contractor shall not restrict driveway access for more than 48 hours under any circumstance and shall be responsible for maintaining traffic control barricades to prevent traffic from using the driveway during this period.

The contractors for both the roadwork and adjacent building construction shall coordinate with the Engineer, so as to avoid conflicts regarding scheduling and construction access to respective work.

This work will not be paid for separately but shall be included in the cost to perform the work.

ILLINOIS DEPARTMENT OF TRANSPORTATION PERMIT

No work shall be performed within the State of Illinois Right of Way until the Contractor has been given written notice that the required IDOT permit has been issued to the Village of Oswego for this described project.

WORK WITHIN FLOODPLAIN AND FLOODWAY

No work shall be performed within the floodplain or floodway until the Contractor has been given written notice that the required permits have been issued to the Village of Oswego for this described project.

BENCHMARKS

The contractor shall provide a minimum of three (3) additional benchmarks in locations that will not be disturbed by construction activities.

MAINTAINING ACCESS TO HUDSON CROSSING PARK

The contractor shall not restrict pedestrian access to the adjacent Hudson Crossing Park under any circumstances and shall be responsible for maintaining traffic control barricades to prevent vehicular traffic from entering Harrison Street during periods of roadway reconstruction.

Should a cross walk need to be closed due to roadway reconstruction, the contactor shall provide a safe path for pedestrians which shall include wooden ramps to traverse curb if necessary.

MAINTENANCE OF ROADWAYS

Beginning on the date that work begins on this project, the Contractor shall assume responsibility for normal maintenance of all existing roadways adjacent to the project area. This normal maintenance shall include all repair work deemed necessary by the Engineer but shall not include snow removal operations. Traffic control and protection for maintenance of roadways will be provided by the Contractor as required by the Engineer.

If items of work have not been provided in the contract, or otherwise specified for payment, such items required by the Engineer, will be paid for in accordance with Article 109.04 of the Standard Specifications.

STREET SWEEPING & PREPARATION

The Contractor shall be responsible for sweeping and cleaning streets of any debris and material that has accumulated as a result of the construction activity. A mechanical sweeper, mechanically driven air and handwork with shovel and broom shall be utilized to provide a clean street for the motoring public. Within 24 hours of placing prime coat and the laying of HMA, the contractor shall sweep the pavement and remove standing water, earth, weeds, leaves, dirt, construction debris and all loose material.

This work will not be paid for separately but shall be included in the cost to perform the work.

SAW CUTTING

The contractor shall saw cut all concrete and asphalt surfaces and underground utility items prior to removal. This work will not be paid for separately but shall be included in the unit price for the items being removed.

TRENCH BACKFILL

The contractor shall provide trench backfill as necessary for all underground utilities and structures. This work will not be paid for separately but shall be included in the unit price for each item being removed and/or installed.

ROCK EXCAVATION

All rock excavation performed shall adhere to Section 202 of the Standard Specifications for Road and Bridge Construction, for Rock Excavation, except the work shall be considered included in the cost of the contract.

FURNISHED EXCAVATION

Description of Work:

All furnished excavation shall adhere to Section 204 of the Standard Specifications for Road and Bridge Construction, for Furnished Excavation. Material from the on-site proposed building must be used if Section 204 requirement are meet and/or acceptable for the Village Engineer/Geotechnical Consultant.

Method of Measurement:

This work shall be measured per Cubic Yard for FURNISHED EXCAVATION, regardless if provided from on or off-site location.

Basis of Payment:

This work shall be paid for at the contract unit price per Cubic Yard for FURNISHED EXCAVATION.

GEOTECHNICAL FABRIC FOR GROUND STABILIZATION

Description of Work:

All work shall adhere to Section 210 of the Standard Specifications for Road and Bridge Construction, for Geotechnical Fabric for Ground Stabilization and as specified herein.

Material:

The fabric shall be of a **non-woven material** meeting the requirements of Article 1080.02 and to be approved by the engineer.

Method of Measurement:

This work shall be measured in place Square Yard for GEOTECHNICAL FABRIC FOR GROUND STABILIZATION.

Basis of Payment:

This work shall be paid for at the contract unit price per Square Yard for GEOTECHNICAL FABRIC FOR GROUND STABILIZATION.

PORTLAND CEMENT CONCRETE CURING AND PROTECTION

All curing and protection of placed Portland Cement Concrete shall be in accordance with the appropriate articles of Section 1020.13 of the Standard Specifications as amended herein. A white pigmented curing compound shall be applied to the finished surface of the placed concrete once it is set.

CONNECTION TO EXISTING UTILITY STRUCTURES, EXCLUDING WATER MAIN

All connections to existing utility structures (manholes, catch basins, etc.), shall be approved by the Engineer prior to backfill. Where new mains are to be connected to existing active sanitary sewers, the active sewers shall remain in service. Unless otherwise indicated, where new lines are connected into existing manholes, all or such portion of the manhole invert as is necessary shall be removed and a new invert shall be constructed to accommodate both new and existing flows. All work shall conform to the requirements specified in the Standard Specifications for Road and Bridge Construction, for new manholes. The existing structure connection shall be cored and a flexible watertight connection (i.e., boot) installed. The boot shall be installed in accordance with project details and requirements. This work shall not be paid for separately but shall be included in the unit price for the sewer lines being installed.

SEWER LINE STUBS

Sewer line stubs for future connections shall be furnished and placed by the Contractor according to details shown on the drawings and as directed by the Engineer. The end of the stub where future connections will be made shall be properly supported on crushed stone or concrete and braced when not resting on original ground so that any settlement will not disturb the connection. The end of the sewer line stub shall be witnessed and marked in the manner described for Sanitary Service, Special. This work shall not be paid for separately but shall be included in the unit price for the sewer lines being installed.

RAILROAD PROTECTIVE LIABILITY INSURANCE

Description of Work:

Railroad Protective Liability and Property Damage Liability Insurance shall be carried according to Article 107.11 of the Standard Specifications.

Method of Measurement:

This work shall be measured per Lump Sum for RAILROAD PROTECTIVE LIABILITY INSURANCE.

Basis of Payment:

This work shall be paid for at the contract unit price per Lump Sum for RAILROAD PROTECTIVE LIABILITY INSURANCE.

HYDROSTATIC TESTS AND DISINFECTION OF THE WATER MAIN

Description of Work:

The following procedures are to be strictly followed by all persons engaged in the pressure testing and/or disinfection of public water distribution mains and private water services 3-inches and larger in diameter. The requirements of these design standards and the requirements of the Illinois Protection Agency water permit shall be strictly enforced. The contractor is required to provide any and all equipment necessary to complete the pressure testing and/or disinfection of the water mains and services. Prior to any test, the contractor shall arrange with the Village Public Works Department (630) 554-3242 to have the required tests witnessed, and shall give a minimum of two working days advance notice.

The contractor shall not operate any valves in the existing public water supply system. Requests for valve operations are to be made through the Public Works Department. Requests for valve operations shall be made 24 hours prior to any scheduled operations or tests.

Construction Method:

The contractor shall perform a preliminary pressure/leakage test to ensure that all segments of the system meet the pressure/leakage rates as set forth herein. When the contractor has assured himself that the system will meet the required leakage rates, the contractors shall arrange (two working days in advance) witnessing of the pressure test with the Village Public Works Department. The tests shall be conducted as follows:

1. Hydrostatic Test:
    a. Where any section of a water line is provided with concrete thrust blocking for fittings, the hydrostatic tests shall not be made until at least 5 days after installation of the concrete thrust blocking.
    b. Disposal of wastewater from hydrostatic tests, and for disinfection, shall be approved in advance by the Village Public Works Department.
    c. The new water mains and service lines including valves and hydrants shall be subjected to a hydrostatic pressure of 150 psi.
    d. The test pressure shall be held for a duration of two hours without pressure loss or further pressure application.
    e. Each valve shall be opened and closed several times during the test.
    f. Careful examination of exposed pipe, joints, fittings, and valves is required.
    g. Joints showing visible leakage shall be remade or replaced.
    h. Cracked pipe, defective pipe, and cracked or defective joints, fittings, and valves shall be replaced with sound material and the test repeated until results are satisfactory.

After all mains have been satisfactorily pressure tested and accepted by the Village, the contractor shall proceed to disinfect the main in accordance with AWWA Standard C651. A chlorine concentration during disinfection shall be maintained at a minimum 50 mg/l available chlorine. The chlorinated water shall be retained in the main for a period of at least 24 hours. At the end of the 24-hour period, the treated water

shall contain no less than 25 mg/l chlorine throughout the main. The contractor will sample the chlorinated disinfecting solution to assure that these minimums are maintained.

After an applicable retention period, the heavily chlorinated water shall be flushed from the main until the chlorine concentration in the water leaving the main is not higher than that generally prevailing in the system. After final flushing, and as witnessed by the Village Public Works Department, the contractor shall obtain two samples of water from the main for bacteriological testing. For major water main installation, the number of samples may be increased as determined by the Village Public Works Department. A second series of samples shall be collected no less than 24-hours after the first set of samples has been collected. The individual sets of samples shall be bacteriologically tested to show the absence of coliform organisms.

If both sets of samples are satisfactory, the Village Public Works Department shall open all valves on the system. The contractor and the Village will be furnished with copies of the bacteriological report for their records. Only Village Public Works staff is allowed to operate valves.

This work will not be paid for separately but shall be included in the contract unit price per linear foot for WATER MAIN of the size specified which price shall include all necessary labor and materials to pressure test, disinfect, and test the water main, all as required to place the water main in service in accordance with the IEPA regulations.

WATER MAIN ABANDONMENT

Description of Work:

This work shall include disconnection and abandonment of the existing water main at locations shown on the drawings, and in the manner detailed.

Construction Method:

Disconnecting and abandoning the existing water main shall only occur after all water services have been transferred to the proposed water main.

Disconnecting the existing water main will require interruption of services. The superintendent of the Utility (Village), the Engineer and the Contractor shall mutually agree upon a date and time for disconnections which will allow ample time to assemble labor and materials, and to notify all customers affected. Customers shall be notified at least 48 hours prior to being taken out of service.

The Contractor shall not operate valves on existing mains (unless otherwise authorized by the Village).

The Contractor shall expose the water main to be disconnected and shall confirm the size and type of piping present. The Contractor shall obtain the necessary materials required to make a proper disconnection. The Contractor shall not proceed until he has all the required materials on site. The Contractor shall limit the time for disconnections to four (4) hours. In no case, shall a customer(s) be out of service overnight.

Contractor shall remove any portion of the existing main as necessary in order to install the proposed water main. The removal of water main, as necessary, shall be included within the contract cost of abandonment.

All dead connections shall be plugged water tight with brick and hydraulic concrete (2' bulkhead) or ductile iron cap.

Method of Measurement:

This work shall be measured per Each Street for WATER MAIN ABANDONMENT. The unit 'Each Street', shall include the total length of each street within the project, limit to limit, that includes WATER MAIN ABANDONMENT.

Harrison Street: Sta. 5+00.00 to Sta. 16+00

Jackson Street: Sta. 200+00 to Sta. 204+00

Adams Street: Sta. 20+00 to Sta. 27+50

Basis of Payment:

This work shall be paid for at the contract unit price per Each Street for WATER MAIN ABANDONMENT, which price shall include all equipment, labor, disposal of removed pipe, rounded stone bedding, connection pipe, caps, and other materials (not listed for payment separately) required to properly disconnect/remove existing water mains.

REMOVE EXISTING FLARED END SECTION

Description of Work:

This work shall consist of the removal of existing flared end sections of storm sewer.

Construction Method:

Existing flared end sections shall be removed so that all sections of pipe considered suitable by the engineer for future use shall be salvaged. The location and manner of storage of the salvaged material shall be as directed by the Engineer.

Any of the material having salvage value which has been damaged by the Contractor shall be replaced with new pipe of the same kind and size. Material not suitable for salvage shall be disposed of according to Article 202.03.

Method of Measurement:

This work shall be measured per Each for REMOVE EXISTING FLARED END SECTION, no matter the size.

Basis of Payment:

This work shall be paid for at the contract unit price per Each for REMOVE EXISTING FLARED END SECTION, no matter the size, which price shall include all equipment, labor, and disposal or salvage of removed pipe sections.

BRICK SIDEWALK REMOVAL

Description of Work:

The work under this pay item includes removal of brick sidewalk and associated concrete bands unless otherwise noted on plans. When specified on the plans or as directed by the Engineer, the contractor shall remove the bricks and salvage them for use elsewhere as specified on the project plans. All extra salvaged brick (stacked & wrapped on pallets) shall be made available to the Village. Any extra salvaged brick, the Village does not desire to keep shall be disposed of.

Disposal of Materials:

All material removed that is not to be salvaged, shall be disposed of, at the Contractor's expense, outside the limits of the job at locations acceptable to the Engineer. In accordance with Section 107.01 of the "Standard Specifications for Road and Bridge Construction" as amended by Public Act 90-761.

Method of Measurement:

This work shall be measured per Square Foot for BRICK SIDEWALK REMOVAL. If additional pavement or sub-grade is removed due to negligence on the part of the Contractor, the additional quantity of pavement removal and replacement or sub-grade material will not be measured for payment.

Basis of Payment:

This work shall be paid for at the contract unit price per Square Foot for BRICK SIDEWALK REMOVAL. If additional pavement or sub-grade is removed due to negligence on the part of the Contractor, the additional quantity of pavement removal and replacement or sub-grade material will not be paid for. The cost of salvaging the brick for further use by the Village shall included in the cost to perform the work.

REINSTALL SALVAGED BRICK SIDEWALK

Description of Work:

The Contractor shall reinstall the salvaged sidewalk bricks (and associated concrete band, if necessary to match existing) as needed at the locations shown on the plans. The limits of this work shall be as necessary to perform adjacent work and grading. The limits of the work shall be such that there will not be any tripping hazards within the area of the brick sidewalk and such that there are not any low spots within this area that prevent the brick sidewalk from draining properly. The approximate limits of this work are shown on the plans, but additional work may be necessary as directed by the Engineer. The Contractor may be required to saw the bricks to match into the curb, sidewalk and driveway aprons. The bid item will be full compensation for all work necessary including any incidental items to reinstall the salvaged bricks to match into the adjacent curb, sidewalk, or driveway aprons.

Method of Measurement:

This work shall be measured per Square Foot for REINSTALL SALVAGED BRICK SIDEWALK. Associated concrete band portion, if necessary, will not be measured for payment.

Basis of Payment:

This work will be paid for at the contract unit price per Square Foot for REINSTALL SALVAGED BRICK SIDEWALK. Which shall be payment in full for all labor and materials necessary to complete the work as specified.

BRICK PAVEMENT

Description of Work:

The Contractor shall install pavement bricks at the locations shown on the plans. The limits of this work shall be as necessary to perform adjacent work and grading. The limits of the work shall be such that there will not be any tripping hazards within the area of the brick pavement and such that there are not any low spots within this area that prevent the brick pavement from draining properly. The approximate limits of this work are shown on the plans, but additional work may be necessary as directed by the Engineer. The Contractor may be required to saw the bricks to match into the curb and utility structures. The bid item will be full compensation for all work necessary.

Method of Measurement:

This work shall be measured per Square Foot for BRICK PAVEMENT. Associated concrete band portion will not be measured for payment

Basis of Payment:

This work will be paid for at the contract unit price per Square Foot for BRICK PAVEMENT, which shall be payment in full for all labor and materials necessary to complete the work as specified.

BRICK SIDEWALK

Description of Work:

The Contractor shall install sidewalk bricks at the locations shown on the plans. The limits of this work shall be as necessary to perform adjacent work and grading. The limits of the work shall be such that there will not be any tripping hazards within the area of the brick sidewalk and such that there are not any low spots within this area that prevent the brick sidewalk from draining properly. The approximate limits of this work are shown on the plans, but additional work may be necessary as directed by the Engineer. The Contractor may be required to saw the bricks to match into the curb, sidewalk and driveway aprons. The bid item will be full compensation for all work necessary.

Method of Measurement:

This work shall be measured per Square Foot for BRICK SIDEWALK.

Basis of Payment:

This work will be paid for at the contract unit price per Square Foot for BRICK SIDEWALK, which shall be payment in full for all labor and materials necessary to complete the work as specified.

POLYUREA PAVEMENT MARKINGS

Description of Work:

This work shall consist of all pavement markings on both asphalt and portland cement concrete surfaces.

Materials and Construction Method:

All Polyurea pavement markings material and placement shall be in accordance with Article 780.10 of the Standard Specifications.

Method of Measurement:

This work shall be measured per Foot for POLYUREA PAVEMENT MARKINGS.

Basis of Payment:

This work shall be paid for at the contract unit price per Foot for POLYUREA PAVEMENT MARKINGS, which price shall include all equipment and labor included in the placement of the pavement markings.

SANITARY SEWER REMOVAL

Description of Work:

This work shall consist of the removal of existing sanitary sewer.

Construction Method:

Excavation of trenches shall be performed according to the applicable requirements of Article 550.04. Backfill of trenches shall be performed according to the applicable requirements of Article 550.07.

Method of Measurement:

This work shall be measured per Foot for SANITARY SEWER REMOVAL.

Basis of Payment:

This work shall be paid for at the contract unit price per Foot for SANITARY SEWER REMOVAL, which price shall include all equipment, labor, and disposal or salvage of removed pipe sections.

SANITARY SEWER, JACK AND BORE

Description of Work

This work shall consist of boring and jacking operations related to the installation of sanitary sewer pipe, in areas where trenching is not feasible or permitted, or as designated on the plans.

This work consists of installing welded steel casing pipe meeting ASTM A53, Grade B with a minimum yield strength of 35,000 psi complete and in place, as shown in the detail on the plans or at the direction of the Engineer.

Materials:

Standard Specification for Pipe, Steel, Black and Hot-Dipped,
Zinc-Coated, Welded and Seamless ASTM A53

The steel casing shall be seamless or electric resistance-welded tubing for sizes up to 24-inch O.D. and standard double-submerged arc-weld for sizes over 24 inches.

Steel pipe shall be new, unused, ASTM A-139, Grade B, straight seam, minimum yield strength of 35,000 psi, and minimum tensile strength of 60,000 psi, with one beveled end (to 37 degrees) and other end square cut.

Construction Method:

Boring shall be performed to alignment and grade as shown on the construction drawings.

Equipment shall be of adequate size and capability to install the product and in conformance with the equipment Manufacturer's recommendations for all power equipment used in the installation. Equipment shall have a means for controlling line and grade and a means for centering the cutting head inside the borehole. Equipment shall provide a means for preventing voids by assuring:

a) In stable, cohesive conditions, the rear of the cutting head must be prevented from advancing in front of the leading edge of the casing by more than 1/3 times the casing diameter, not to exceed 8 inches.
b) In unstable conditions, such as granular soil, loose or flowable materials, the cutting head must be retracted into the casing a distance that permits a balance between pushing pressure, pipe advancement and soil conditions.

Every effort shall be made to prevent formation of voids. Upon completion of the boring operations, voids around the outside face of the casing shall be filled by grouting.

The Contractor shall be responsible for protecting any underground utilities and for any damage resulting to located utilities.

The Contractor shall be fully responsible for producing a sound, tight installation, true to line and grade. All pipe shall be installed through the casing using casing spacers.

If the grade of the pipe at the jacking end is below the ground surface, suitable pits or trenches shall be excavated for the purpose of conducting the jacking operations and for placing end joints of the pipe. Such work shall be sheeted securely and braced in accordance with OSHA Trench Safety requirements.

Heavy duty jacks suitable for pushing the casing through the soil shall be provided. In operating jacks, even pressure shall be applied to all jacks used so that pressure will be applied to the casing uniformly around the ring of the casing.

A suitable jacking frame or back stop shall be provided. The pipe to be jacked shall be set on guides properly braced together, to support the section of the casing and to direct it in the proper line and grade.

The whole jacking assembly shall be placed so as to line up with the direction and grade of the casing. In general, soil material shall be excavated just ahead of the casing and material removed through the casing and the casing forced through the soil with jacks, into the space thus provided.

The casing, preferably, shall be jacked from the low or downstream end. Lateral or vertical variation in the final position of the casing from the line and grade established by the Engineer shall not exceed 0.1

feet per 50 linear feet of pipe for gravity flow installations, provided that such variation shall be regular and only in one direction and that the final grade or flow line shall be in the direction indicated.

If the Contractor desires, he may use a cutting edge of steel plate around the head end of the casing extending a short distance beyond the end of the casing with inside angles or lugs to keep the cutting edge from slipping onto the casing.

When jacking of casing is once begun, the operation shall be carried on without interruption, insofar as practical, to prevent the casing from becoming firmly set in the soil.

Any casing damaged in jacking operations shall be removed and replaced by the Contractor at his entire expense.

Immediately after jacking is complete and the carrier or encasement pipe is accurately positioned and approved for line and grade, the clearance space between the pipe and soil shall be completely filled by pressure grouting for the entire length of the installation.

The pits or trenches excavated to facilitate jacking operations shall be backfilled immediately after the jacking of the casing has been completed.

The work shall be performed in accordance with the Plans, the Illinois Water and Sewer Specifications, and the latest detail and applicable ordinances of the Village of Oswego.

The exterior of the casing pipe shall be coated with coal tar epoxy or bituminous asphalt.

Minimum size and wall thickness of steel casing pipe shall be as shown in the following table:

Carrier Pipe Size	Minimum Casing Pipe	Minimum Casing Wall Thickness
12”	30”	3/8”

The sanitary sewer shall be installed through the casing pipe using stainless steel casing spacers to prevent the carrier pipe bell from touching the casing pipe and to maintain a uniform space between the carrier pipe and casing interior. Hardwood skids shall NOT be used in place of manufactured casing spacers.

Restraint harness for push-on bells of ductile iron pipe shall be used on all sanitary sewer pipe joints within the proposed casing pipe. The ends of the casing pipe shall be sealed using a pull over type rubber end seal secured with stainless steel bands to preclude entrance of foreign material into the casing, which might prevent ready removal of the sanitary sewer at some future date.

Removal and replacement of casing to avoid obstructions, achieve correct slope, elevation, and bearing will be done at no additional cost to the Contract. Installation of short lengths of casing and carrier pipe because of limited working room will be done at no additional cost to the Contract.

Method of Measurement:

This work shall be measured per linear Foot for SANITARY SEWER, JACK AND BORE, of the size specified, along the centerline of the pipe. The length of pipe shall be measured by the Engineer prior to insertion, and any unused portion after installation shall be subtracted from the original length to arrive at the final measurement for payment.

Basis of Payment:

This work shall be paid for at the contract unit price per linear Foot for SANITARY SEWER, JACK AND BORE, of the size specified, in lineal feet and includes all labor, materials, equipment, spacers, cradles, end seals and incidentals to complete the work.

The sanitary sewer installed within the jack and bore casing pipe shall be measured and paid for under SANITARY SEWER.

CONNECTION TO EXISTING WATER MAIN

Description of Work:

This work shall consist of making connection to the existing water main at the location shown on the drawings, and in the manner detailed.

Where the connection of new work and old require interruption of services and notification of customers affected, the superintendent of the Utility (Village), the Engineer and the Contractor shall mutually agree upon a date and time for connections which will allow ample time to assemble labor and materials, and to notify all customers affected. Customers shall be notified at least 24 hours prior to being taken out of service.

Construction Method:

Valves on existing mains shall not be operated by the Contractor (unless otherwise authorized by the Village), and will be closed and opened only by the employees of the Village's Water Department.

The Contractor shall expose the water main to be connected and shall confirm the size and type of piping present. The Contractor shall obtain the necessary materials required to make a proper connection. The Contractor shall not proceed until he has all the required materials on site. The Contractor shall limit the time for interconnections to four (4) hours. In no case, shall a customer(s) be out of service overnight.

Once the new water mains have been tested and approved for service then the Contractor shall, under the direction of the Engineer and Village, place the new watermain in service.

Method of Measurement:

This work shall be measured per Each for CONNECTION TO EXISTING WATER MAIN for size specified.

Basis of Payment:

This work shall be paid for at the contract unit price per Each for CONNECTION TO EXISTING WATER MAIN for size specified, which price shall include all labor, equipment, sleeves, fittings, connecting pipe, rounded stone bedding and other materials, (not listed for payment separately), required to make proper connections of the existing water mains to the proposed water mains. VALVE VAULTS reuired for these connections will be paid for separately at their respective contract unit prices.

TYPE 1 FRAMES WITH CLOSED LIDS (FOR STORM SEWER MANHOLES, SANITARY SEWER MANHOLES AND VALVE VAULTS)

Description of Work:

This work shall include materials and installation of Type 1 Frames with closed Lids according to this Special Provision, project plans and details.

Materials:

The closed lids shall have the approved **Village of Oswego logo** imprinted within the lid. The manhole frames shall be only Neenah R-1712-C (390 lbs.) or East Jordan 1051-1 frames with blind pick hole solid lids. Lids shall be marked to identify the utility which passes through the structure as in **Storm Sewer**, **Sanitary Sewer** or **Watermain**.

Basis of Payment:

This work shall be not be paid separately, but shall be included in the cost of the structure being constructed.

FIRE HYDRANT COMPLETE

Description of Work:

This work shall include materials and installation of fire hydrants according to the project plans and details. All materials needed to install the hydrant as per detail will be at no further cost to the contract. Hydrants shall be manufactured to the latest and best design conforming to the current AWWA Specifications C-502, "Standard for Dry Barrel Fire Hydrants" and be of the break away style traffic design.

Materials:

The hydrant shall be a Waterous Pacer *Clow Medallion* (Model #67-250) or approved equal.

Valve box and stabilizer shall be manufactured by A.Y. McDonald, or an approved equal, with the cap marked "Water".

Hydrant brace shall be steel with a gray iron top and manufactured by BLR Enterprises, Inc. or an approved equal.

Construction Method:

Hydrants shall be installed in accordance with applicable provisions of Section 45 of the Standard Specifications for Water and Sewer Main Construction in Illinois.

After installation and before backfilling (and after pressure testing the water main) test the hydrant as follows:

A. Pressure Test
    1. Open the hydrant fully and fill with water; close all outlets.

2. To prevent caps from being blow off dry-barrel hydrants and to prevent other possible damage, vent air from the hydrant by leaving one of the caps slightly loose as the hydrant is being filled. After all air has escaped, tighten the cap before proceeding.
3. Apply line pressure.
4. Check for leakage at flanges, nozzles and operating stem.
5. If leakage is noted, repair or replace components or complete hydrant until no leaks are evident.

B. Drainage Test for Dry-Barrel Hydrants

1. Following the pressure test, close hydrant.
2. Remove one nozzle cap and place pylon or hand over nozzle opening.
3. Drainage rate should be sufficiently rapid to create a noticeable suction.
4. After backfilling, operate the hydrant to flush out any foreign material.
5. Tighten nozzle caps, them back them off slightly so that they will not be excessively tight; leave tight enough to prevent removal by hand.

The hole formed for installing the fire hydrant assembly shall be backfilled with aggregate, or as directed by the Engineer.

Trench Backfill material shall be CA-7 and shall be included within the cost of the water main.

Method of Measurement:

This work shall be measured per Each for FIRE HYDRANT COMPLETE.

Basis of Payment:

This work shall be paid for at the contract unit price per Each for FIRE HYDRANT COMPLETE which price shall include providing and installing the hydrant, the auxiliary valve and valve box, hydrant lead pipes, backfill material and fabric, and thrust blocking as detailed on the plans. Water main tee for hydrant lead will be paid for under WATER MAIN TEE of size specified.

VALVE VAULTS TO BE REMOVED

Description of Work:

This item shall consist of removing the existing valve vaults as shown on the plans.

Construction Method:

This work shall consist of removing of all components, cutting out water main, capping the existing water main, removing the cone and vault structure, and backfilling with compacted native soils.

For valve vaults located outside of the bituminous road way, the remaining void shall be filled with earthen backfill. The earthen backfill shall be considered incidental to VALVE VAULTS TO BE REMOVED.

For valve vaults located within the limits of the bituminous roadway, the remaining void shall be filled with Trench Backfill.

Valve vault frame and lid removed shall be salvaged and returned to the Village.

Method of Measurement:

This work shall be measured per Each for VALVE VAULTS TO BE REMOVED, no matter the size.

Basis of Payment:

This work shall be paid for at the contract unit price per Each for VALVE VAULTS TO BE REMOVED, no matter the size, which includes all necessary labor, tools, equipment, and materials necessary to remove and dispose of existing valve vaults.

HOT-MIX ASPHALT DRIVEWAY PAVEMENT

Description of Work:

The work under this pay item includes placing and compacting granular fill material on a prepared subgrade to bring the new driveway to the proposed grades and forming the driveway.

The new driveway pavement structure shall adhere to the HMA Driveway detail in the plan set and per Sections 351 and 406 of the IDOT Standard Specifications, except as modified by this Special Provision.

Construction Method:

Just before constructing the HMA pavement, the Contractor shall grade, shape and compact the aggregate base prior to installing the HMA pavement shown in the detail. The tack coats and prime coats shall be placed as required by Section 406 of the IDOT Standard Specifications.

Method of Measurement:

This work shall be measured per Square Yards for HOT-MIX ASPHALT DRIVEWAY PAVEMENT, of the thickness specified.

Additional new HMA driveway pavement installed due to the Contractor's negligence and not following these special provisions will not be measured for payment.

Basis of Payment:

This work shall be paid for at the contract unit price per Square Yards for HOT-MIX ASPHALT DRIVEWAY PAVEMENT, of the thickness specified. Labor and equipment costs associated with providing the aggregate base to construct the HMA pavement will be included in the cost of this item.

FENCE REMOVAL

Description of Work:

This work shall consist of removing of an existing fence from the project site at the locations shown on the plans and/or designated by the Engineer. All fence removed shall be disposed of except the ornamental fence near the park. The ornamental fence designated for removal shall be salvaged and delivered to the Village of Oswego Public Works Department or as directed by the Engineer.

Construction Method:

The Contractor shall remove all components of the existing fence, including any concrete used to anchor fence posts, bracing, guy wires, posts, and/or gates. All removed materials shall be disposed of outside the limits of the right-of-way according to Article 202.03 of the "Standard Specifications" and/or as directed by the Engineer.

Method of Measurement:

This work shall be measured per Foot for FENCE REMOVAL, along the top of the fence to be removed, from center to center of end posts, excluding the length occupied by gates.

Basis of Payment:

This work shall be paid for at the contract unit price per Foot for FENCE REMOVAL. The unit price shall include all equipment, materials and labor required to remove and dispose of the existing fence.

COLUMN REMOVAL

Description of Work:

This work shall consist of removing and disposing of the existing fence columns at locations shown on the plans.

Construction Method:

The Contractor shall remove all components of the existing columns, including any concrete. The two existing bronze plaques and steel arch shall be removed, stored, and re-installed with new columns. All other removed materials shall be disposed of outside the limits of the right-of-way according to Article 202.03 of the "Standard Specifications" and/or as directed by the Engineer.

Method of Measurement:

This work shall be measured per Each for COLUMN REMOVAL, no matter the size.

Basis of Payment:

This work shall be paid for at the contract unit price per Each for COLUMN REMOVAL, no matter the size, which includes all necessary labor, tools, equipment, and materials necessary to remove and dispose of existing columns. The cost of storing and re-installing the bronze plaques and steel arch shall be included in the cost of new STONE ARCH COLUMNS.

ORNAMENTAL FENCE

Description of Work:

This work shall consist of furnishing and installing new ornamental fence (complete including fence rail, post, and all hardware/accessories) as shown on the contract drawings and/or designated by the Engineer.

Materials:

The ornamental fence shall be in accordance with the contract drawings.

Method of Measurement:

This work shall be measured per Foot for ORNAMENTAL FENCE, along the top of the fence to be installed, from edge to edge of column.

Basis of Payment:

This work shall be paid for at the contract unit price per Foot for ORNAMENTAL FENCE. The unit price shall include all equipment, materials, labor, and any other items required to complete the work.

STONE FENCE COLUMN

Description of Work:

This work shall consist of furnishing and installing new stone fence column (complete including concrete foundation, limestone veneer, cap, and all hardware/accessories) as shown on the contract drawings and/or designated by the Engineer.

Materials:

The stone fence column shall be in accordance with the contract drawings.

Method of Measurement:

This work shall be measured per Each for STONE FENCE COLUMN.

Basis of Payment:

This work shall be paid for at the contract unit price per Each for STONE FENCE COLUMN. The unit price shall include all equipment, materials, labor, and any other items required to complete the work.

STONE ARCH COLUMN

Description of Work:

This work shall consist of furnishing and installing new stone arch column (complete including concrete foundation, limestone veneer, cap, and all hardware/accessories) as shown on the contract drawings and/or designated by the Engineer. The existing two bronze plaque and steel arch removed for existing columns shall be re-installed as shown on the contract drawings. Contractor shall provide all new hardware/accessories for re-installing the plaques and steel arch.

Materials:

The stone arch column shall be in accordance with the contract drawings.

Method of Measurement:

This work shall be measured per Each for STONE ARCH COLUMN.

Basis of Payment:

This work shall be paid for at the contract unit price per Each for STONE ARCH COLUMN. The unit price shall include all equipment, materials, labor, and any other items required to complete the work. The cost for storing and re-installing the plaques and steel arch shall also be included with in this item.

STEEL CASINGS

Description of Work:

This work shall consist of placing casing pipe in trench to provide a sealed carrier pipe between other utilities and the water main.

Materials:

Standard Specification for Pipe, Steel, Black and Hot-Dipped,
Zinc-Coated, Welded and Seamless ASTM A53

The steel casing shall be seamless or electric resistance-welded tubing for sizes up to 24-inch O.D. and standard double-submerged arc-weld for sizes over 24 inches.

Steel pipe shall be new, unused, ASTM A-139, Grade B, straight seam, minimum yield strength of 35,000 psi, and minimum tensile strength of 60,000 psi, with one beveled end (to 37 degrees) and other end square cut.

Construction Method:

This work shall be in accordance with the Standard Specifications for Water & Sewer Main Construction in Illinois and applicable ordinances of the Village of Oswego.

The water main shall be installed through the casing pipe using stainless steel casing spacers to prevent the carrier pipe bell from touching the casing pipe and to maintain a uniform space between the carrier pipe and casing interior. Hardwood skids shall NOT be used in place of manufactured casing spacers.

Restraint harness for push-on bells of ductile iron pipe shall be used on all water main pipe joints within the proposed casing pipe. The ends of the casing pipe shall be sealed using a pull over type rubber end seal secured with stainless steel bands to preclude entrance of foreign material into the casing, which might prevent ready removal of the water main at some future date.

The exterior of the casing pipe shall be coated with coal tar epoxy or bituminous asphalt.

Minimum size and wall thickness of steel casing pipe shall be as shown in the following table:

Carrier Pipe Size	Minimum Casing Pipe	Minimum Casing Wall Thickness
10”	20”	3/8”
12”	30”	3/8”

The Contractor may install larger-diameter pipe than called for above, if he believes it would be beneficial to placement or pipe stability, at no extra cost.

Method of Measurement:

This work shall be measured per linear Foot for STEEL CASINGS, of the size specified.

Basis of Payment:

This work shall be paid for at the contract unit price per linear Foot for STEEL CASINGS, of the size specified. The price shall include the cost of all labor, equipment, and materials, including the spacers and end seals necessary to complete this item.

The water main installed within the casing pipe shall be measured and paid for under WATER MAIN.

WATER MAIN

Description of Work:

This work shall consist of installing a new water main of the specified diameter and material in trenches or in casing pipe. The construction of water main, including protection from sewers, pressure testing, and disinfection, shall be according to the Standard Specifications for Water & Sewer Main Construction in Illinois, except as follows.

Materials:

Fine Aggregates 1003
Course Aggregates 1004
American National Standard for Polyethylene Encasement
of Ductile-Iron Pipe Systems ..... ANSI/AWWA C105/A21.5
American National Standard for Ductile-Iron and Gray-Iron Fittings,
3-inch through 48-inch, for Water and Other Liquids ..... ANSI/AWWA C110/A21.10
American National Standard for Rubber-Gasket Joints for
Ductile-Iron Pressure Pipe and Fittings ..... ANSI/AWWA C111/A21.11
American National Standard for the Thickness Design
of Ductile-Iron Pipe ..... ANSI/AWWA C150/A21.50
American National Standard for Ductile-Iron Pipe,
Centrifugally Cast, for Water ..... ANSI/AWWA C151/A21.51
AWWA Standard for Installation of Ductile Iron
Water Mains and Their Appurtenances ..... ANSI/AWWA C600

Construction Methods:

The main shall be made of ductile iron and shall conform to ANSI A21.51 (AWWA C151), thickness Class 52 per ANSI A21.50 (AWWA C150). The water main pipe shall be bituminous seal coated and cement lined per ANSI A21.4 (AWWA C104). The water main shall have mechanical or rubber gasket push-on joints per ANSI A21.11 (AWWA C111 and AWWA C600). The water main fittings shall be ductile iron with mechanical or push type joints conforming to ANSI A21.10 (AWWA C110). The fittings shall be lined and coated to match the requirements for the water main.

Restraint harness (approved by the Village) for push-on bells of ductile iron pipe shall be used on all water main pipe joints within the proposed casing pipe.

The water main and its appurtenances shall be encased in polyethylene liners. The liner shall not have any openings exposed to backfill material and shall be sealed with tape at all joints and tears. The

polyethylene liners shall have a minimum thickness of 0.0008 inch (8 mils) and shall be Class C (black) conforming to ANSI A21.5 and AWWA C105. Tubes or sheets may be used.

Bedding material shall adhere to the Trench Sections detail in the plan set.

Meeting separation requirements is incidental to the item.

After initial backfill, granular trench backfill shall be placed and compacted according to the Trench Sections detail of the plan set.

Trench Backfill material shall be CA-7 and shall be included within the cost of the water main.

It is the Contractor's responsibility to dewater the trenches in order to install water main, water services, fire hydrants, valves, vaults and other underground items.

Method of Measurement:

This work shall be measured per linear Foot for WATER MAIN, of the size and material specified. This work will be measured along the ground surface (water main installed vertically will not be measured).

Basis of Payment:

This work shall be paid for at the contract unit price per linear Foot for WATER MAIN, of the size and material specified. The unit price shall include all labor, equipment, specified pipe materials, plugs, bolts, retainer glands, fittings, locking type gaskets, polyethylene liners, thrust blocks, pipe bedding, initial and final backfill, trench dewatering and all other materials required to make the installation. This unit price shall also include water main caps at the end of line. For water main sections not requiring granular trench backfill, the contract unit price shall include the cost of backfilling and compacting excavated material into the trench to the satisfaction of the Engineer, and disposing of any surplus excavated material.

ADJUSTING WATER MAIN, SPECIAL

Description of Work:

This work shall consist of adjusting water main in conflict with sewer to be constructed.

Materials:

Materials for adjusting water main shall be ductile iron pipe, Class 52, conforming to ANSI/AWWA C151/A21.51-86, Standard for Ductile Iron Pipe, Centrifugally Cast in Metal Molds or Sand Lined Molds, for Water or Other Liquids. Ductile iron pipe shall be cement lined in accordance with AWWA C104, Standard for Cement Mortar Lining and Ductile Iron and Gray Iron Pipe and Fittings for Water. Fittings shall be ductile iron or cast iron in accordance with AWWA C110, Standard for Ductile Iron and Gray Iron Fittings, 3-in. through 48-in., for Water and Other Liquids, and AWWA C151. Pipe joints shall be mechanical or push-on in accordance with AWWA C111, Standard for Rubber Gasket Joints for Ductile Iron and Gray Iron Pressure Pipe and Fittings. Refer to the latest revision for the above AWWA standards. All mechanical joint fittings shall be installed with stainless steel bolts.

Trench Backfill material shall be CA-7 and shall be included within the cost of the water main.

Construction Method:

Installation requirement shall be in accordance with Section 561 of the Standard Specification, and shall be completed within the work hours designated by the Engineer.

Method of Measurement:

This work shall be measured per linear Foot along the ground surface (water main installed vertically will not be measured) for ADJUSTING WATER MAIN, SPECIAL, of size specified.

Basis of Payment:

This work shall be paid for at the contract unit price per linear Foot for ADJUSTING WATER MAIN, SPECIAL, of size specified. Said price shall include the cost of all pipe, retainer glands, fittings, connections to existing water main, joint materials, hydrostatic test (if necessary), disinfection of water main as specified elsewhere, removal and disposal of old water main and all excavation.

WATER SERVICE LINE, SPECIAL

Description of Work:

This work shall consist of installing new water service of the size specified. A water service line is designed to deliver water from a water main to a single building, extended from the water main to the building, and includes corporation stop, curb stop, service line, and service box. Service lines shall be approximately at a right angle to the centerline of the right-of-way whenever possible. The preferred location for the service box is 1 foot outside of the public right of way and not located within any driveways or sidewalks/paths. The service line should be a continuous length of pipe and couplings are not allowed. Trench Backfill material shall be CA-7 and shall be included within the cost of the water service line.

Materials:

1. Service lines: Type K soft temper seamless copper water tubing complying with ASTM B-88.
2. Corporation stops: A. Y. McDonald, or approved equal.
3. Curb stops: A. Y. McDonald, or approved equal.
4. Service boxes: Buffalo type, Minneapolis pattern for 1” copper service. Lid marked “Water”.
5. All service taps shall be either with a manufactured tap coupling or full stainless steel. For service lines greater than 1 ½ inches in diameter, taps shall be made with a ductile type or stainless steel (full body) tapping sleeve.

Method of Measurement:

This work shall be measured per linear Foot for WATER SERVICE LINE, SPECIAL, of the size specified.

Basis of Payment:

This work shall be paid for at the contract unit price per linear Foot for WATER SERVICE LINE, SPECIAL, of the size specified which price shall include all necessary labor and materials. This shall include the tap, corporation stop, curb stop, service line, curb box, joint materials, thrust blocks, pipe bedding, initial backfill, trench dewatering and all other materials required to make the installation.

VALVE VAULT

Description of Work:

This work shall include materials and installation of water valve and valve vaults of the size and type specified at the locations shown on the drawings. The gate valves shall be suitable for ordinary water works service, intended to be installed in a normal position on buried pipe lines for water distribution systems.

Materials:

Valve vaults shall be constructed according to Section 602 of the Standard Specifications for the Road and Bridge Construction and according to the plan details.

All valves shall be AWWA C515-01, ductile iron body, bronze fitted, modified wedge disc, resilient seat type with non-rising stem and O-ring packing designed for 250 pound working pressure, as manufactured by American Flow Control, or approved equal.

Construction Method:

All vaults for newly constructed water main shall have flexible rubber watertight pipe connectors. Pressure connection taps/vaults shall seal the pipe entrances for the existing pipe with anti-hydro cement. Vaults and boxes shall not be allowed in driveways or sidewalks, and must be located on the property lines accessible to Village repair/maintenance vehicles. All valves eight-inch diameter or less shall be in a minimum four-foot diameter vault. All valves ten-inch diameter or greater shall be in a minimum five-foot diameter vault. Pressure connection taps/valves shall be in a minimum five-foot diameter vault. Valve vault frames shall be Neenah R-1530 and lids shall be a “Neenah” type B, or approved equal, with the word “WATER” stamped into the lid. Each valve vault cone and barrel section joint shall also be externally sealed with a 9" wide (min.) sealing band of rubber and mastic. The band shall have an outer layer of rubber or polyethylene with an under layer of rubberized mastic (with a protective film), meeting the requirements of ASTM C-877, type II or type III.

All main valves shall be installed in precast concrete vaults conforming to ASTM C478 as detailed in the Valve Vault Detail. All auxiliary valves at fire hydrants will be measured and paid for under FIRE HYDRANT COMPLETE. Other valves Vaults and boxes shall not be allowed in driveways or sidewalks, and must be located on the property lines accessible to Village repair/maintenance vehicles.

Method of Measurement:

This work shall be measured per Each for VALVE VAULT of the size and type specified.

Basis of Payment:

This work shall be paid for at the contract unit price per Each for VALVE VAULT of the size and type specified. The price shall include the cost of all labor, equipment, water valve, valve vault and other materials necessary to complete this item.

VALVE BOX

Description of Work:

This work shall include materials and installation of water valve and valve box of the size and type specified at the locations shown on the drawings. The gate valves shall be suitable for ordinary water works service, intended to be installed in a normal position on buried pipe lines for water distribution systems.

Materials:

Valve boxes/lids shall be Tyler, two-piece with drop lid, 6850 series (screw type, 5-1/4 inch shafts), or approved equal. Valve boxes and extensions must be cast iron and conform to the requirements of Standard Specifications for Gray Iron Castings, ASTM Designation A-48.

All valves shall be AWWA C515-01, ductile iron body, bronze fitted, modified wedge disc, resilient seat type with non-rising stem and O-ring packing designed for 250 pound working pressure, as manufactured by American Flow Control, or approved equal.

Construction Method:

Water valve shall be installed with cast iron valve box. The valve boxes shall be adjusted and shall be set to position during backfill operations, so they will be in a vertical alignment to the valve operating stem. The lower casting of the unit shall be installed using a valve box stabilizer as to be cushioned and to not rest directly upon the body of the gate valve or upon the water main. The upper casting of the unit shall then be placed in proper alignment to such an elevation that its top will be at final grade. All auxiliary valves at fire hydrants installed in cast iron valve boxes shall be measured and paid for under FIRE HYDRANT COMPLETE.

Method of Measurement:

This work shall be measured per Each for VALVE BOX of the size and type specified.

Basis of Payment:

This work shall be paid for at the contract unit price per Each for VALVE BOX of the size and type specified. The price shall include the cost of all labor, equipment, water valve, valve box and other materials necessary to complete this item.

FIRE HYDRANT TO BE REMOVED

Description of Work:

This work shall include the removal of existing fire hydrants including the spool section, auxiliary valve, valve box and any capping necessary to abandon the water main.

Construction Method:

The hole formed by the removal of the existing fire hydrant assembly shall be backfilled with aggregate, or as directed by the Engineer.

All fire hydrants removed shall be salvaged and returned to the Village.

Method of Measurement:

This work shall be measured per Each for FIRE HYDRANT TO BE REMOVED. Backfilled material will not be measured for payment.

Basis of Payment:

This work shall be paid for at the contract unit price per Each for FIRE HYDRANT TO BE REMOVED. The unit price shall include all labor, equipment, material, and trench dewatering to make the installation.

REMOVE & RESET MAILBOX

Description of Work:

The work under this pay item includes removing, storing and re-erecting existing mailboxes within the limits of construction that interfere with construction operations. In addition, the Contractor will supply, erect and maintain a temporary mailbox until the original mailbox is reset.

Construction Method:

Prior to removing the existing mailbox, the contractor shall erect a temporary mailbox at a "to-be" agreed upon locations with the US Postal Service along the construction limits.

While the temporary mailboxes are in use, the Contractor shall maintain ownership of them and are responsible for their upkeep. Any temporary mailboxes damaged during their use shall be replaced by the Contractor at no additional charge to the Village.

As soon as construction operations permit, the Contractor shall remove the temporary mailbox banks and re-erect the original mailboxes at their original locations or as directed by the Engineer. Mailboxes shall be reinstalled per the US Postal Service mailbox installation guide.

The Contractor shall replace, at no additional cost to the contract, any mailbox or post which has been damaged by the contractor's operations. The cost of all materials required and all labor necessary to comply with the work as specified will be included in this work.

Method of Measurement:

This work shall be measured per Each for REMOVE & RESET MAILBOX. Temporary mailboxes will not be counted for payment.

Basis of Payment:

This work shall be paid for at the contract unit price per Each for REMOVE & RESET MAILBOX. All costs associated with providing, erecting, maintain and removing the temporary mailbox, will be included in the cost of this item.

STREET LIGHT TO BE PAINTED

Description of Work:

This work shall consist of the preparation and painting of existing street lights at locations shown on the plans. The work shall be completed be in accordance with Section 506 of the Standard Specification.

Existing pole surface shall be prepared by SSPC-SP2/3 method in accordance with paint manufacture recommendation.

Method of Measurement:

This work shall be measured per Each STREET LIGHT TO BE PAINTED.

Basis of Payment:

This work shall be paid for at the contract unit price per Each STREET LIGHT TO BE PAINTED. The Contractor shall furnish all materials, equipment, labor, and other essentials necessary to accomplish this work.

SANITARY SEWER

Description of Work:

This work consists of furnishing and installing sanitary sewer of the material and size specified at the locations and depths as shown on the plans.

Materials:

1. PIPE & FITTINGS

Pipe and fittings used in sanitary sewer construction shall be polyvinyl chloride (PVC) pipe. PVC pipe and fittings dated over one-year-old shall not be permitted for use. No solvent-welded joints shall be allowed outside of the foundation wall of any building.

The types of PVC pipe and fittings that shall be used in the District include:

- Poly Vinyl Chloride (PVC) Sewer Pipe and Fittings (ASTM - SDR series), conforming to ASTM Numbers D-1784 (cell classification), D-3034, D-3212 (joint spec), and F-477 (gaskets).
- Poly Vinyl Chloride (PVC) Pressure Rated Pipe and Fittings (ASTM - SDR series), conforming to ASTM Numbers D-1784 (cell classification), D-2241, D-3139 (joint spec), and F-477 (gaskets).
- Poly Vinyl Chloride (PVC) Pressure Rated Pipe and Fittings (AWWA DR-series) conforming to AWWA C-900, AWWA C-905, and ASTM Numbers D-1784 (cell classification), D-3139 (joint spec), F-477 & F-913 (gaskets).

All PVC plastic pipe and fittings shall have a cell classification of 12454 as defined in ASTM D-1784 and shall have minimum pipe stiffness as shown table below. The required Standard Dimension Ratio (SDR) or Dimension Ratio (DR) for PVC pipe and fittings shall be selected based upon the depth of cover, as also shown in the table below:

Depth of Cover	Pipe Diameter	Minimum Thickness	National Standard	Minimum Pipe Stiffness
3.5’ - <15’	6” – 12”	SDR 26	ASTM D-3034	115
3.5’ - <20’	6” – 12”	SDR 21	ASTM D-2241	224

3.5’ - <30’	6” – 12”	DR-18	AWWA C-900	364
3.5’ - <30’	14”	DR-18	AWWA C-905	364

Fittings in sizes through twelve (12) inches shall have elastomeric joints and minimum socket depths as specified in each respective section. Fittings above twelve (12) inches shall be molded or fabricated with elastomeric joints in accordance with ASTM standards D-1784 and D-3139 incorporating the manufacturer’s standard pipe bells and gaskets. Gaskets shall conform to ASTM F-477 and ASTM F-913.

The District reserves the right to approve/reject all pipe and fittings on a case-by-case basis.

Restraint harness (approved by the Village) for push-on bells of PVC pipe shall be used on all sanitary sewer pipe joints within the proposed casing pipe.

2. BEDDING, HAUNCHING, AND INITIAL BACKFILL

Bedding material shall be CA-7 Class 1A, as outlined in ASTM D-2321 and shall be certified by the manufacturer and approved by the District prior to installation, to have the following characteristics:

- Description: Shall be crushed stone or crushed gravel, as produced from crushing by mechanical means.
- Gradation: Shall meet the IDOT gradation of CA-7, Class 1A.
- Plasticity Index: Shall meet a plasticity index of 0 to 4 percent as determined by the method given in AASHTO T 90.
- Specific Gravity: Shall have a specific gravity (dry) of greater than 2.45.

3. LABORATORY TEST

The District reserves the right to require a contractor to submit certified copies of all reports of tests conducted by an independent laboratory before installation of PVC plastic pipe. Tests shall be conducted in accordance with Standard Method of Test for “External Loading Properties of Plastic Pipe by Parallel-Plate Loading” per ASTM D2412.

<u>Construction Methods:</u>

1. INSTALLATION

If the invert of any overhead sewer exceeds two (2) feet above the footing, plate compaction of the CA-7 Class 1A aggregate shall be required in twelve (12) inch lifts.

Trench widths should be stable or supported, provide a width sufficient, but no greater than necessary to ensure working room to properly and safely place haunching and other embedment materials. The minimum trench width shall be 32” <u>plus</u> the outside diameter of the pipe and the maximum trench width shall be 48” <u>plus</u> the outside diameter of the pipe.

Pipe size shall be a minimum of eight (8) inches for public sewers and six (6) inches for building sewers.

Pipes shall be laid in a manner which provides uniform support over the entire length. No blocking of any kind shall be used to adjust the pipe to grade except when embedment concrete is used. Bedding shall be a minimum of six (6) inches in depth. The bedding material shall be placed and worked in around pipe by hand to provide uniform support, then around and over the crown of the pipe by a minimum of twelve

(12) inches. The granular embedment material shall be placed and consolidated along the full width of the trench. The contractor shall be required to install the pipe in such a manner that the diametric deflection of the pipe shall not exceed five (5) percent.

PVC transition fittings shall be used in all new construction when joining PVC pipes of different outside dimensions.

Service connections to new mains shall be with a tee/wye fitting with a six (6) inch branch and shall connect to the main at a (max.) forty-five (45) degree angle. Where no tee/wye exists, an Inserta Tee brand fitting shall be required.

Cast iron clean out covers conforming to ASTM A-48 Class 30 or equivalent shall be required for all sanitary sewer services located in any paved surface. Locations of said covers shall be limited to a spacing of no greater than one hundred (100) feet or that constructed per the approved engineering plan.

The use of ductile iron & cast iron pipe is not allowed for the use of gravity sewers in the District.

Either 4" X 6" rubber or non-shear couplings shall be used to connect the building drain to the building sewer. If using a rubber fitting, the four-inch pipe shall be inserted six to twelve inches inside of the six inch building sewer.

Whether any grease removal system (GRS) is newly constructed or retrofitted to an existing building, all District guidelines pertaining to minimum slope and cover depth for sanitary construction shall be strictly adhered to.

All building drains/sewers shall be overhead or "hung" through the wall of any basement.

Full-sized cleanouts shall be installed five (5) feet from the foundation wall.

2. TESTING

Before final acceptance, all public sewers shall be tested in accordance with Section 31-1.12 of the "Standard Specifications for Water and Sewer Main Construction in Illinois" (*see testing under "Sanitary Manhole" for vacuum testing).

All pipelines constructed of polyvinyl chloride (PVC) shall be subject to air exfiltration, deflection, vacuum and televising tests.

The deflection test shall be performed no sooner than thirty (30) days of the backfilling operation and shall consist of measuring the pipe for vertical ring deflection. Maximum ring deflection of the pipeline under load shall be limited to five (5) percent of the internal pipe diameter. All pipes exceeding this deflection shall be considered to have reached the limit of its serviceability and shall be re-laid or replaced by the contractor at their sole expense.

The cost of all deflection testing shall be borne by the contractor and shall be accomplished by pulling a mandrel, sphere, or pin-type "go / no go" device, with a diameter equal to ninety-five (95) percent of the un-deflected inside diameter of the flexible pipe through the pipeline. Pipe shall be constructed so that the internal diameter does not decrease by more than five (5) percent.

All sanitary sewer (public or private) having a diameter of eight (8) inches or greater shall be televised by the District. Said televising work is scheduled once all sanitary testing (air & vacuum) has been received by the District. Any defects in said sewer shall be required to be excavated and repaired at the contractor's or developer's sole expense. Caution should be taken before constructing roads, curbs,

sidewalks or any other infrastructure, whether it is above or below the ground surface. It is the responsibility of the utility contractor and the developer to contact the District prior to installing any of these utilities or infrastructure. Repairs to defective sanitary sewers shall be performed regardless of the status of other construction or extraneous expenses.

Sanitary sewers shall be constructed sufficiently deep so as to prevent freezing. For all locations of sanitary sewers placed less than 4 feet deep (to top of pipe), insulation shall be provided as detailed on the plans.

Method of Measurement:

This work shall be measured per linear Foot of SANITARY SEWER, of the material and size specified, along pipe centerline from center of structure to center of structure. Measurement will run through any joints, tees or non-shear mission couplings. Trench Backfill material shall be CA-7 and shall be included within the cost of the sanitary sewer.

Basis of Payment:

This work shall be paid for at the contract unit price per linear Foot for SANITARY SEWER, of the material and size specified. The price shall include the cost of all labor, equipment, and materials necessary to complete this item.

GREASE INTERCEPTOR – 1500 GAL

Description of Work:

This work consists of constructing a 1500-gallon ADS (or approved equal) Grease Interceptor for on-site use trapping floatable grease and oils in water treatment applications.

Construction Requirements:

Grease Interceptors shall meet requirements specified in ASTM F2649. Grease Interceptors shall have a smooth interior and annular exterior corrugations using pipe that meets AASHTO M252 Type S, AASHTO M294 Type S, or ASTM F2306. The inlet and outlet of the unit shall utilize 8-inch SDR 32.5 HDPE pipe. A weir plate shall be installed with an orifice centrally located to control flow into the last chamber. At the weir plate, a vertical half-round pipe shall be installed to minimize contaminants through the orifice. Connections to the inlet and outlet shall utilize couplers with the same joint performance as the main sewer pipe. Installation of Grease Interceptor shall be according to manufacturer installation guidelines, utilizing a class I (ASTM D2321) structural backfill material.

Materials:

Material for pipe and fittings used to produce the Grease Interceptor shall be high density polyethylene conforming with the minimum requirements of cell classification 424420C for 4- through 10-inch (100- to 250-mm) diameters, and 435400C for 12- through 60-inch diameters as defined and described in the latest version of ASTM D3350. The pipe material shall be evaluated using the notched constant ligament-stress (NCLS) test as specified in Sections 9.5 and 5.1 of AASHTO M294 and ASTM F2306, respectively.

Method of Measurement:

This work shall be measured per Each for GREASE INTERCEPTOR – 1500 GAL installed. All bends, risers, and cleanouts required, shall be included in the cost to perform the work.

Basis of Payment:

This work shall be paid for at the contract unit price per Each for GREASE INTERCEPTOR – 1500 GAL installed.

SANITARY SERVICE

Description of Work:

This work consists of furnishing and installing sanitary service of the material and size specified at the locations and depths as shown on the plans.

Materials:

1. PIPE & FITTINGS

Pipe and fittings used in sanitary service construction shall be polyvinyl chloride (PVC) pipe. PVC pipe and fittings dated over one-year-old shall not be permitted for use. No solvent-welded joints shall be allowed outside of the foundation wall of any building.

The types of PVC pipe and fittings that shall be used in the District include:

- Poly Vinyl Chloride (PVC) Sewer Pipe and Fittings (ASTM - SDR series), conforming to ASTM Numbers D-1784 (cell classification), D-3034, D-3212 (joint spec), and F-477 (gaskets).
- Poly Vinyl Chloride (PVC) Pressure Rated Pipe and Fittings (ASTM - SDR series), conforming to ASTM Numbers D-1784 (cell classification), D-2241, D-3139 (joint spec), and F-477 (gaskets).
- Poly Vinyl Chloride (PVC) Pressure Rated Pipe and Fittings (AWWA DR-series) conforming to AWWA C-900, AWWA C-905, and ASTM Numbers D-1784 (cell classification), D-3139 (joint spec), F-477 & F-913 (gaskets).

All PVC plastic pipe and fittings shall have a cell classification of 12454 as defined in ASTM D-1784 and shall have minimum pipe stiffness as shown table below. The required Standard Dimension Ratio (SDR) or Dimension Ratio (DR) for PVC pipe and fittings shall be selected based upon the depth of cover, as also shown in the table below:

Depth of Cover	Pipe Diameter	Minimum Thickness	National Standard	Minimum Pipe Stiffness
3.5’ - <15’	6” – 12”	SDR 26	ASTM D-3034	115
3.5’ - <20’	6” – 12”	SDR 21	ASTM D-2241	224
3.5’ - <30’	6” – 12”	DR-18	AWWA C-900	364

Fittings in sizes through twelve (12) inches shall have elastomeric joints and minimum socket depths as specified in each respective section. Fittings above twelve (12) inches shall be molded or fabricated with

elastomeric joints in accordance with ASTM standards D-1784 and D-3139 incorporating the manufacturer's standard pipe bells and gaskets. Gaskets shall conform to ASTM F-477 and ASTM F-913.

The District reserves the right to approve/reject all pipe and fittings on a case-by-case basis.

2. BEDDING, HAUNCHING, AND INITIAL BACKFILL

Bedding material shall be CA-7 Class 1A, as outlined in ASTM D-2321 and shall be certified by the manufacturer and approved by the District prior to installation, to have the following characteristics:

- Description: Shall be crushed stone or crushed gravel, as produced from crushing by mechanical means.
- Gradation: Shall meet the IDOT gradation of CA-7, Class 1A.
- Plasticity Index: Shall meet a plasticity index of 0 to 4 percent as determined by the method given in AASHTO T 90.
- Specific Gravity: Shall have a specific gravity (dry) of greater than 2.45.

3. LABORATORY TEST

The District reserves the right to require a contractor to submit certified copies of all reports of tests conducted by an independent laboratory before installation of PVC plastic pipe. Tests shall be conducted in accordance with Standard Method of Test for "External Loading Properties of Plastic Pipe by Parallel-Plate Loading" per ASTM D2412.

Construction Methods:

1. INSTALLATION

Trench widths should be stable or supported, provide a width sufficient, but no greater than necessary to ensure working room to properly and safely place haunching and other embedment materials. The minimum trench width shall be 32" plus the outside diameter of the pipe and the maximum trench width shall be 48" plus the outside diameter of the pipe.

Pipe size shall be a minimum of six (6) inches for building sewers.

Pipes shall be laid in a manner which provides uniform support over the entire length. No blocking of any kind shall be used to adjust the pipe to grade except when embedment concrete is used. Bedding shall be a minimum of six (6) inches in depth. The bedding material shall be placed and worked in around pipe by hand to provide uniform support, then around and over the crown of the pipe by a minimum of twelve (12) inches. The granular embedment material shall be placed and consolidated along the full width of the trench. The contractor shall be required to install the pipe in such a manner that the diametric deflection of the pipe shall not exceed five (5) percent.

PVC transition fittings shall be used in all new construction when joining PVC pipes of different outside dimensions.

Service connections to new mains shall be with a tee/wye fitting with a six (6) inch branch and shall connect to the main at a (max.) forty-five (45) degree angle. Where no tee/wye exists, an Inserta Tee brand fitting shall be required.

Cast iron clean out covers conforming to ASTM A-48 Class 30 or equivalent shall be required for all sanitary sewer services located in any paved surface. Locations of said covers shall be limited to a spacing of no greater than one hundred (100) feet or that constructed per the approved engineering plan.

The use of ductile iron & cast iron pipe is not allowed for the use of gravity sewers in the District.

Either 4" X 6" rubber or non-shear couplings shall be used to connect the building drain to the building sewer. If using a rubber fitting, the four-inch pipe shall be inserted six to twelve inches inside of the six inch building sewer.

Whether any grease removal system (GRS) is newly constructed or retrofitted to an existing building, all District guidelines pertaining to minimum slope and cover depth for sanitary construction shall be strictly adhered to.

All building drains/sewers shall be overhead or "hung" through the wall of any basement.

All services must be cleaned to the satisfaction of the Engineer prior to being put in service.

In those instances when the service line is not immediately connected to the building to be served, it shall be tightly plugged, using a plug provided by the pipe manufacturer for such use. Plugs shall be marked by 4"x 4" posts painted green.

Sanitary sewers shall be constructed sufficiently deep so as to prevent freezing. For all locations of sanitary sewers placed less than 4 feet deep (to top of pipe), insulation shall be provided as detailed on the plans.

Method of Measurement:

This work shall be measured per lineal Foot for SANITARY SERVICE, of the material and size specified. The length will be measured along the horizontal centerline of the service. All bends, risers, and cleanouts will be included in the measured horizontal length. Adjustments will not be made to the horizontal length to accommodate vertical distances for the riser or cleanout. Trench Backfill material shall be CA-7 and shall be included within the cost of the sanitary service.

Basis of Payment:

This work shall be paid for at the contract unit price per linear Foot for SANITARY SERVICE, of the material and size specified. The price shall include the cost of all labor, equipment, and materials necessary to complete this item.

TRENCH DRAIN - PATIO

Description of Work:

This work shall consist of installing a trench drain at locations according to the project plans and the direction of the engineer.

Product:

The trench drain system installed shall be the 'EZ-Track, Dura Slope Trench Drain System', produced by NDS, Inc.

The drain shall be Part No. DS-097 (6.01" to 6.35" Deep Dura Slope Trench Drain).

The grate shall be Part No. 663 (2 ft. Trench Drain Grate – Black).

All associated NDS couplings and catch basins shall be according to the manufacturer recommendations.

Construction Method:

The trench drain is to be installed according to the manufacturers recommendations and Trench Drain Detail in the project plans.

Method of Measurement:

This work shall be measured per linear Foot for TRENCH DRAIN - PATIO. The length will be measured along the horizontal length. Adjustments will not be made to the horizontal length to accommodate vertical distances for the outlet pipes or catch basins. Trench Backfill material shall be CA-7 and shall be included within the cost of the trench drain.

Basis of Payment:

This work shall be paid for at the contract unit price per linear Foot for TRENCH DRAIN - PATIO installed, and includes all labor, materials, equipment, grates, couplings, catch basins and end seals required to complete the work according to the project plans and manufacturer recommendations.

TRENCH DRAIN - PAVEMENT

This work shall consist of furnishing all materials including grates and necessary labor to construct trench drain as locations shown and detailed in the plans, in accordance with applicable portions of Section 602 of the Standard Specifications, and as directed by the Engineer.

Materials:

A. Frame & Grate: All frames and grates (bolted down type) shall be heavy duty and furnished in Gray Iron, Class 35-B.
B. Concrete: Concrete used for trench drain structure shall meet requirements of Section 1020 of the SSRBC, Class SI concrete.
C. Reinforcing Steel: Steel rods, dowels, and tie bars shall meet the requirements of ASTM A 615 or ASTM A 617, deformed, Grade 40

Method of Measurement:

This work shall be measured per linear Foot for TRENCH DRAIN - PAVEMENT. The length will be measured along the horizontal length. Adjustments will not be made to the horizontal length to accommodate vertical distances for the outlet pipes or catch basins. Trench Backfill material shall be CA-7 and shall be included within the cost of the trench drain.

Basis of Payment:

This work shall be paid for at the contract unit price per linear Foot for TRENCH DRAIN - PAVEMENT installed, and includes all labor, materials, equipment, excavation and backfill, reinforcement bars, compacted aggregate, concrete, frame and grate, required to complete the work according to the project plans and manufacture recommendations.

PORTLAND CEMENT CONCRETE STEPS

Description of Work:

This work shall consist of furnishing and installing concrete steps to the lines and grades shown on the plans and as specified herein. This work shall also include furnishing and installing all related materials required for construction of the concrete steps at locations called for on the plans.

Materials:

A. Concrete: Concrete used for steps shall meet requirements of Section 1020 of the SSRBC, Class SI concrete.
B. Reinforcing Steel: Steel rods, dowels, and tie bars shall meet the requirements of ASTM A 706, Grade 60.
C. Expansion Joint: All expansion joint material shall meet the requirements of Section 424.
D. Forms:
    1. Material used for forms shall be metal, surfaced lumber, plywood, masonite, hard-pressed composition board, or other approved material backed by suitable studding, walers, etc.
    2. Forms shall be free from knotholes, cracks, splits, warps, or other defects which would prevent it from producing the strength, accuracy, and appearance necessary in the finished concrete surface.
    3. Reused form material shall be thoroughly cleaned and shall be free of bulges, splits, warps, or bends.

Construction:

A. Prepare Subgrade: In fill areas construct and compact to a minimum of 95% of maximum Standard Proctor Density ASTM D 698.
B. Forming:
    1. Forms shall be constructed with mortar-tight joints and of material sufficient in strength to hold concrete without bulging between supports.
    2. Forms shall be so designed and constructed that they may be removed without injury to the concrete. Blocks and bracing shall be removed with the forms, and in no case shall any portion of wood forms be left in the concrete.
    3. Forms shall be so constructed that the finished concrete shall be of the form and dimensions shown on the plans and substantially true to line and grade.
    4. Forms shall be filled 3/4 inch at all sharp corners and shall be given a bevel in the case of all projections, sufficient to ensure easy removal.
    5. Special attention shall be paid to ties and bracing.
    6. Where forms appear to be insufficiently braced or unsatisfactorily built, either before or during placing of concrete, the Engineer shall order the work stopped until the defects have been corrected to the Engineer's satisfaction.
    7. Forms shall be painted with a colorless oil, or some other satisfactory means shall be taken to prevent concrete from adhering to forms.
    8. Forms shall be thoroughly drenched with water immediately before concrete is placed in them.
C. Placing Concrete:
    1. The subgrade shall be thoroughly moistened before placement.

2. Concrete shall be deposited for the full depth of the steps in one operation.
3. Concrete shall be consolidated by vibrating and the excess concrete screeded off flush with the forms.

D. Finishing: Exposed surfaces shall be finished as soon as practicable. After forms are stripped, no sooner than six hours after the pour, all exposed surfaces shall be rubbed with a No. 16 carborundum brick and water until the surfaces are free of all blemishes and have a uniform appearance.

E. Curing: Curing shall be in accordance with requirements for sidewalk construction in Section 424.

F. If posts are to be set in concrete, they shall be set in a 1 1/2 inch diameter hole (2 ½ inch for pipe rail), a minimum 6 inch depth, and the void filled with a commercial non-shrinking grout. An optional method of setting posts is to bolt posts to the tread with anchor bolts or as recommended by manufacturer.

Method of Measurement:

This work shall be measured per Cubic Yard for PORTLAND CEMENT CONCRETE STEPS. The width shall include all side curbs and sidewalls, if constructed.

Basis of Payment:

This work shall be paid for at the contract unit price per Cubic Yard for PORTLAND CEMENT CONCRETE STEPS, which price shall include all labor and materials necessary to complete the work as described herein. Where there was no existing pavement, but removal of sod, dirt or other materials is necessary for placement of the new sidewalk, the removal and disposal shall NOT be paid for, but shall be included in the cost of the working being performed.

INTERGRAL BARRIER WALL AND SIDEWALK

Description of Work:

This work shall consist of furnishing and installing integral barrier wall and sidewalk to the lines and grades shown on the plans and as specified herein. This work shall also include furnishing and installing all related materials required for construction of the integral barrier wall and sidewalk at locations called for on the plans.

Materials:

E. Concrete: Concrete used for integral barrier wall shall meet requirements of Section 1020 of the SSRBC, Class SI concrete.

F. Reinforcing Steel: Steel rods, dowels, and tie bars shall meet the requirements of ASTM A 706, Grade 60.

G. Expansion Joint: All expansion joint material shall meet the requirements of Section 424.

H. Forms:
   4. Material used for forms shall be metal, surfaced lumber, plywood, masonite, hard-pressed composition board, or other approved material backed by suitable studding, walers, etc.
   5. Forms shall be free from knotholes, cracks, splits, warps, or other defects which would prevent it from producing the strength, accuracy, and appearance necessary in the finished concrete surface.

6. Reused form material shall be thoroughly cleaned and shall be free of bulges, splits, warps, or bends.

Construction:

A. Prepare Subgrade: In fill areas construct and compact to a minimum of 95% of maximum Standard Proctor Density ASTM D 698.
B. Forming:
   9. Forms shall be constructed with mortar-tight joints and of material sufficient in strength to hold concrete without bulging between supports.
   10. Forms shall be so designed and constructed that they may be removed without injury to the concrete. Blocks and bracing shall be removed with the forms, and in no case shall any portion of wood forms be left in the concrete.
   11. Forms shall be so constructed that the finished concrete shall be of the form and dimensions shown on the plans and substantially true to line and grade.
   12. Forms shall be filled 3/4 inch at all sharp corners and shall be given a bevel in the case of all projections, sufficient to ensure easy removal.
   13. Special attention shall be paid to ties and bracing.
   14. Where forms appear to be insufficiently braced or unsatisfactorily built, either before or during placing of concrete, the Engineer shall order the work stopped until the defects have been corrected to the Engineer's satisfaction.
   15. Forms shall be painted with a colorless oil, or some other satisfactory means shall be taken to prevent concrete from adhering to forms.
   16. Forms shall be thoroughly drenched with water immediately before concrete is placed in them.
C. Placing Concrete:
   4. The subgrade shall be thoroughly moistened before placement.
   5. Concrete shall be deposited for the full depth of the steps in one operation.
   6. Concrete shall be consolidated by vibrating and the excess concrete screeded off flush with the forms.
D. Finishing: Exposed surfaces shall be finished as soon as practicable. After forms are stripped, no sooner than six hours after the pour, all exposed surfaces shall be rubbed with a No. 16 carborundum brick and water until the surfaces are free of all blemishes and have a uniform appearance.
E. Curing: Curing shall be in accordance with requirements for sidewalk construction in Section 424.
F. If posts are to be set in concrete, they shall be set in a 1 1/2 inch diameter hole (2 ½ inch for pipe rail), a minimum 6 inch depth, and the void filled with a commercial non-shrinking grout. An optional method of setting posts is to bolt posts to the tread with anchor bolts or as recommended by manufacturer.

Method of Measurement:

This work shall be measured across the top sidewalk surface area per Square Foot for INTEGRAL BARRIER WALL AND SIDEWALK. The integral wall surface area will not be measured for payment.

Basis of Payment:

This work shall be paid for at the contract unit price per Square Foot for INTEGRAL BARRIER WALL AND SIDEWALK, which price shall include all labor and materials necessary to complete the work as

described herein. Where there was no existing pavement, but removal of sod, dirt or other materials is necessary for placement of the new integral barrier wall and sidewalk, the removal and disposal shall NOT be paid for, but shall be included in the cost of the working being performed.

SEGMENTAL CONCRETE BLOCK RETAINING WALL

Description of Work:

Work in this section includes furnishing and installing segmental concrete units, a six (6) inch compacted base (minimum thickness) for the wall support, wall fill, and backfill to the lines and grades designated. Also included is the furnishing and installing of all appurtenant material required for construction of the retaining wall as shown in the project details.

Submittals:

Shop drawings depicting the wall system including unit and grid type, a minimum of 30 days prior to construction for consideration of approval.

Evidence that the modular wall system proposed has been successful on other projects.

Calculations and signed drawings from a Registered Engineer where the units to be used do not conform to the specification herein. Calculations shall be prepared showing the changes to the original design incorporating the submitted products' deviations from the above requirements.

Material:

Cementitious Materials - Materials shall be according to Article 1042.15 and shall conform to the following applicable specifications:

Modified Portland Cement - Portland cement conforming to ASTM C-150, modified as follows: Limestone - Calcium carbonate with a minimum 85% ($CaCO_3$) content, may be1004.04

added to the cement, provided these requirements of ASTMC-150, as modified, are met:

(1) Limitation Insoluble Residue - 1.5%.

(2) Limitation on Air Content of Mortar - volume percent, 22 max.

(3) Limitation on Loss of Ignition - 7%.

Blended Cements - ASTM C 595.

Pozzolans - ASTM C-618.

Blast Furnace Slag Cement ASTM C-989.

Aggregates shall conform to the following specifications, except that gradation requirements shall not necessarily apply:

Normal Weight Aggregates - ASTM C-33.

Lightweight Aggregates - ASTM C-331.

Other Constituents - Air-entraining agents, coloring pigments, integral water repellents, finely ground silica, and other constituents shall conform to applicable ASTM Standards and/or shall be shown by certified testing that the constituent is not detrimental to the durability of the concrete segmental retaining wall units or any material customarily used in masonry construction.

A minimum of six (6) inches of compacted base is required.

A minimum of twelve (12) inches of infill must extend behind the wall to within one (1) foot of final grade. Cap drainage fill with one (1) foot of impervious material.

Backfill material shall be native material unless otherwise specified. The Contractor shall notify the Engineer prior to placing the backfill to verify that it is acceptable.

All units shall be sound and free of cracks or other defects that would interfere with the proper placing of the unit or significantly impact the strength or permanence of the construction. Minor cracks incidental to the usual method of manufacture, or minor chipping resulting from shipment and delivery, are not grounds for rejection. Units showing cracks larger than 1/2 inch measured along their length shall not be used within the wall.

The face or faces of the units that are to be exposed shall be free of chips, cracks or other imperfections when viewed from a distance of 30 feet.

Installation:

The Contractor shall excavate to the lines and grades as shown. Over excavation will not be paid for, and replacement with compacted fill and/or wall system components will be required at the Contractor's expense. The Contractor shall be careful not to disturb the base beyond the lines shown. Embankment excavation shall be bench cut.

Foundation soil shall be excavated as required for footing dimensions shown, or as directed by the Engineer.

Foundation soil shall be examined be the Engineer to ensure that the actual foundation soil strength meets or exceeds the assumed design strength. Soil not meeting the required strength shall be removed and replaced with acceptable material.

Over excavated areas shall be filled with compacted backfill material.

Base shall be placed as shown on drawing with a minimum thickness of six (6) inches. This base shall be incidental to the cost of the wall

Base materials shall be installed upon undisturbed native soils, or compacted fill soils.

Material shall be compacted so as to provide a hard, level surface on which to place the first course of units. Compaction will be with mechanical plate compactor to 95% of Standard Proctor Density.

Base shall be prepared to insure complete contact of retaining wall units with the base. Gaps between the unit and base shall not be allowed.

Base materials shall be to the depths and widths shown. Base shall be of consistent material throughout the length of the wall to eliminate differential movement of the base. The first course of concrete wall units shall be placed on the prepared base. The units shall be checked for level and alignment. The first

course is the most important to insure accurate and acceptable results. Insure that the units are in full contact with the base.

Units are placed tight side be side for the full length of the wall alignment (do not gap). Alignment shall be done by using a string line or offset from a base line. The Contractor shall follow manufacturers installation instructions when making tight radius curves.

Place drainage infill a minimum of twelve (12) inches thick directly behind the back of and between the units. Where fine grain soils or water seepage is encountered in backfill, place geotextile fabric between the drainage fill and backfill to keep the drainage fill clean of fines. Fill should be placed in six (6) inch lifts and compacted to achieve 95% Standard Proctor Density compaction.

Sweep all excess material from the top of the units and install the next course of wall units, drainage fill and backfill. Lay up each course, insuring a positive connection between adjacent courses is achieved, by installing pins through the holes in the top of the unit and interlocking with slots in the previous course. Follow the manufacturer's specific instructions for installation of curves or corners. Backfill and compact. Repeat procedure to the extent of the wall height.

Within twelve (12) inches of the top of the wall, place impervious fill over the drainage infill and throughout the excavated area. Impervious fill cap shall be graded to drain runoff laterally along the wall alignment.

Install cap units on the finished wall. Cap units shall be adhered to the top units according to manufacturer recommendations.

Method of Measurement:

This work shall be measured per Square Foot of exposed vertical wall surface area, excluding the cap for SEGMENTAL CONCRETE BLOCK RETAINING WALL.

Basis of Payment:

This work shall be paid for at the contract unit price per Square Foot for SEGMENTAL CONCRETE BLOCK RETAINING WALL, as measured in place. The unit price shall include all equipment, labor and materials to furnish and install the wall system.

ABANDON AND FILL EXISTING STORM SEWER

Description of Work:

The Contractor shall fill existing storm sewers at locations as shown on the plans or as directed by the Engineer.

Construction Method:

The Contractor shall brick and mortar the ends of the existing pipe that is to be filled. The controlled low-strength material used to fill the storm sewers and the filling operation shall be in accordance with Section 593 of the Standard Specifications.

Method of Measurement:

This work shall be measured per linear Foot for ABANDON AND FILL EXISTING STORM SEWER.

Basis of Payment:

This work shall be paid for at the contract unit price per linear Foot for ABANDON AND FILL EXISTING STORM SEWER. The unit price shall include all labor, equipment, and material.

CLASS "D" PATCH, SPECIAL

Description of Work:

This work shall conform to the appropriate articles of Section 442 of the Standard Specification, except that no type classification will be kept. Each patch is to have a full depth saw cut and then be removed. Saw cutting of the patches and removal of the existing pavement, including sub base is to be included in the cost of this item. If patches are depressed in excess of 3", below the surface of the surrounding pavement, Type II barricades will be placed for no longer than 48 hours. Leveling binder shall be used to ramp the edges of the patches after this time has expired. The cost of the leveling binder used to ramp the edges of the patch shall be considered included in the cost of the CLASS "D" PATCH, SPECIAL, of the depth specified.

Disposal of Materials:

All material resulting from the Patching operation shall be disposed of, at the Contractor's expense, outside the limits of the job at locations acceptable to the Engineer. In accordance with Article 107.01 of the "Standard Specifications for Road and Bridge Construction" as amended by Public Act 90-761 and IDOT Standard 442201-03. A sample of the required load ticket is included in this contract.

Method of Measurement:

This work will be measured per Square Yard for CLASS "D" PATCH, SPECIAL, of the depth specified in place and the area computed in square yards NO MATTER THE SIZE. If additional pavement or sub-grade is removed due to negligence on the part of the Contractor, the additional quantity of pavement removal and replacement or sub-grade material will not be measured for payment.

Where unsuitable material is encountered in the sub-grade, the removal and replacement shall be performed by the Contractor in accordance with the appropriate articles of Section 207 and Section 1004. This will not be measured for payment.

Basis of Payment:

This work will be paid for at the contract unit price per Square Yard for CLASS "D" PATCH, SPECIAL, of the depth specified, which shall be payment in full for all labor and materials necessary to complete the work as specified.

HOT-MIX ASPHALT BIKE PATH

Description of Work:

The work under this pay item includes placing and compacting granular fill material on a prepared subgrade to bring the new path to the proposed grades and forming the asphalt path.

The new bike path pavement structure shall match the existing pavement section and adhere to Sections 351 and 406 of the IDOT Standard Specifications, except as modified by this Special Provision.

Construction Method:

Just before constructing the HMA pavement, the Contractor shall grade, shape and compact the aggregate base prior to installing the HMA pavement to match the existing section. The tack coats and prime coats shall be placed as required by Section 406 of the IDOT Standard Specifications.

Method of Measurement:

This work shall be measured per Square Yard for HOT-MIX ASPHALT BIKE PATH.

Additional new HMA bike path pavement installed due to the Contractor's negligence and not following these special provisions will not be measured for payment.

Basis of Payment:

This work shall be paid for at the contract unit price per Square Yards for HOT-MIX ASPHALT BIKE PATH. Labor and equipment costs associated with providing the aggregate base to construct the HMA pavement will be included in the cost of this item.

BOLLARD

Description of Work:

This work shall consist of the installation of pipe bollards as shown on the contract drawings.

Method of Measurement:

This work shall be measured per Each for BOLLARD installed.

Basis of Payment:

This work shall be paid for at the contract unit price per Each for BOLLARD installed, which shall be payment in full for all labor and materials necessary to complete the work according to the contract drawings.

REMOVE & RELOCATE SIGN

Description of Work:

The work under this pay item includes removing and relocating existing sign onto new Decorative Sign Poles in accordance to Section 724 of the Standard Specifications at locations shown on the contract drawings. New sign supports shall be provided when relocating to new sign pole.

Method of Measurement:

This work shall be measured per Each for REMOVE & RELOCATE SIGN.

Basis of Payment:

This work shall be paid for at the contract unit price per Each for REMOVE & RELOCATE SIGN.

DECORATIVE SIGN POLE

Description of Work:

This work shall consist of furnishing, constructing, and installing a decorative sign pole with foundation as shown on the contract drawings.

Materials and Construction Requirements:

The decorative sign pole shall be in accordance with the contract plan drawings and include all hardware/accessories.

The concrete foundation shall be constructed and installed per the details in the Contract Drawings, and in conformance with Section 836 of the Standard Specifications. Where soil conditions require support to prevent caving in of the shaft sidewall, the contractor shall be responsible for furnishing and installing a full depth form liner at no additional cost.

Method of Measurement:

This work shall be measured per Each for BOLLARD installed.

Basis of Payment:

This work shall be paid for at the contract unit price per Each for BOLLARD installed, which shall be payment in full for all labor and materials necessary to complete the work according to the contract drawings.

PRECAST CONCRET TRANSFORMER PAD

Description of Work:

This work shall consist of furnishing, constructing, and installing a precast concrete transformer pad per the requirements of ComEd at locations shown on the contract drawings.

Materials and Construction Requirements:

The precast concrete transformer pad size, material, and installation shall be in accordance with ComEd requirements.

Method of Measurement:

This work shall be measured per Each for PRECAST CONCRETE TRANSFORMER PAD installed.

Basis of Payment:

This work shall be paid for at the contract unit price per Each for PRECAST CONCRETE TRANSFORMER PAD installed, which shall be payment in full for all labor and materials necessary to complete the work according to the contract drawings.

PRECAST CONCRETE SWITCHGEAR PAD

Description of Work:

This work shall consist of furnishing, constructing, and installing a precast concrete switchgear pad per the requirements of ComEd at locations shown on the contract drawings.

Materials and Construction Requirements:

The precast concrete switchgear pad size, material, and installation shall be in accordance with ComEd requirements.

Method of Measurement:

This work shall be measured per Each for PRECAST CONCRETE SWITCHGEAR PAD installed.

Basis of Payment:

This work shall be paid for at the contract unit price per Each for PRECAST CONCRETE SWITCHGEAR PAD installed, which shall be payment in full for all labor and materials necessary to complete the work according to the contract drawings.

ELECTRIC SPLICE BOX

Description of Work:

This work shall consist of furnishing and installing an electric splice box per the requirements of ComEd at locations shown on the contract drawings.

Materials and Construction Requirements:

The electric splice box size, material, and installation shall be in accordance with ComEd requirements.

Method of Measurement:

This work shall be measured per Each for PRECAST CONCRETE SWITCHGEAR PAD installed.

Basis of Payment:

This work shall be paid for at the contract unit price per Each for PRECAST CONCRETE SWITCHGEAR PAD installed, which shall be payment in full for all labor and materials necessary to complete the work according to the contract drawings.

CONNECTION TO EXISTING UTILITY POLE

Description of Work:

This work shall consist of completing connection to existing utility pole per the requirements of ComEd at locations shown on the contract drawings.

Materials and Construction Requirements:

The connection to existing utility pole installation shall be in accordance with ComEd requirements.

Method of Measurement:

This work shall be measured per Each for CONNECTION TO EXISTING UTILITY POLE.

Basis of Payment:

This work shall be paid for at the contract unit price per Each for CONNECTION TO EXISTING UTILITY POLE, which shall be payment in full for all labor and materials necessary to complete the work according to the contract drawings.

TRAFFIC CONTROL AND PROTECTION, SPECIAL

Description of Work:

This work shall be done in accordance with the Section 107 of the Standard Specifications, Recurring Special Provisions, Part IV of Illinois Department of Transportation Reprint of the "Manual on Uniform Traffic Control Devices" published by the Federal Highway Administration, the appropriate articles of Section 1084 of the Standard Specifications and the Standard Specification for Traffic Control Devices adopted May1, 2009 by the Illinois Department of Transportation. All applicable state standards for traffic control devices, lane closures and traffic control staging shall conform to current IDOT standards at all times.

This item of work shall include the furnishing, installing, maintaining, relocating and removing all traffic control devices used for the purpose of regulating, warning, or directing traffic vehicular and/or pedestrian, during the construction of this project.

The governing factor in the execution and staging of work for this project is to provide the motoring public, residents, visitors and business owners with the safest possible conditions along the roadway and in the construction zone. The Contractor shall so arrange his operations as to keep the closing of roadways adjacent to the construction zone to a minimum.

All operations which require a reduction in the number of lanes of traffic shall comply with the aforementioned standards including a flagman posted at each end of the lane closure at all times. "Stop" and "Slow" paddles shall be used to control traffic. Flags will NOT be allowed as the sole means of traffic control. Minimum lane widths shall be 10 feet. Single lane roads will not be allowed without flagmen. Type II barricades with working steady burn light units shall be used whenever the change in pavement height exceeds 2 inches due to any construction activity and at all butt joints. The Engineer reserves the right to stop any construction activity when traffic control is neglected.

Traffic control devices include signs and their supports (ALL supports for advance warning signs, such as ‘Road Construction Ahead’ or ‘Detour’ signs shall be post mounted), signals, pavement markings, barricades (with sandbags if necessary), channelization devices, warning lights, arrow boards, flaggers, or any other device used for the purpose of guiding traffic through or detouring around the construction zone.

The Contractor will be responsible for the proper location, installation, and arrangement of all traffic control devices. Special attention shall be given to advance warning signs during construction operations in order to keep lane assignment consistent with barricade placement at all times. The Contractor shall

cover or remove all traffic control devices which are inconsistent with detour or lane assignment patterns during the transition from one construction stage to another.

The Contractor shall ensure that all traffic control devices installed by him are operational 24 hours a day, including Sundays and Holidays.

The Contractor shall be reachable on a 24 hour a day basis to receive notification of any deficiencies regarding traffic control and protection and shall dispatch personnel, materials, and equipment to correct any such deficiencies. The Contractor shall respond to any call from the Village concerning a request for improving or correcting traffic control devices and begin making the requested repairs within two hours from the time of notification. Any traffic control protection devices found not to be in working order (i.e. lights not working, broken or damaged legs, etc.) shall be replaced within 24 hours of notification of contractor. No additional compensation will be made for replaced traffic control protection devices.

When traveling in lanes open to public traffic, the Contractor's vehicles shall always move with and not against the flow of traffic. These vehicles shall enter and leave work areas in a manner which will not be hazardous to or interfere with traffic and shall not park or stop except within designated work areas. Those vehicles belonging to the Contractor or his employees shall remain on Village property only and shall not pull into, park, or block any access to private property.

Any drop off greater than three inches, but less than six inches, within eight feet of the pavement edge shall be protected by Type I or II barricades equipped with mono-directional steady burn lights at 100-foot center to center spacing. If the drop off within eight feet of the pavement edge exceeds six inches, the barricades mentioned above shall be placed at 50-foot center to center spacing. Barricades that must be placed in excavated areas shall have leg extensions installed such that the top of the barricade is in compliance with the height requirement of Standard 701901. Vertical panels or other delineating devices may be substituted for Type I or Type II barricades with the approval of the Engineer. When lane assignments conflict with existing pavement markings, approved traffic control devices such as signs, cones, barrels, barricades, etc. will be used to delineate traffic lanes. When the available street width is not sufficient to allow for two-lane, two-way traffic, certified flaggers will be required in accordance with the standards included herein.

Standards: 0000001-07, 701301-04, 701311-03, 701501-06, 701701-10, 701801-06, 701901-08, 704001-08, 720001-01, 720006-04, 720011-01, 728001-01, 729001-01, and 731001-01

Details: IDOT District 3 Details 701-3, 720-8, 720-9, 720-10, 720-11

Special Provisions: Maintenance of Roadways, Control of Work, Temporary Informational Signing.

Delays to the Contractor caused by complying with these requirements will be considered included in the price of the pay item TRAFFIC CONTROL AND PROTECTION, SPECIAL and no additional compensation will be allowed.

Method of Measurement:

This work shall be measured per Lump Sum for TRAFFIC CONTROL AND PROTECTION, SPECIAL.

Basis of Payment:

This work shall be paid for at the contract unit price per Lump Sum for TRAFFIC CONTROL AND PROTECTION, SPECIAL. Which shall include all labor and equipment to provide the standards, details and special provisions here in described.

EXPLORATION EXCAVATION (UTILITY)

Description of Work:

This item shall consist of locating an existing public or private underground utilities that maybe in close proximity of a proposed light pole foundation using the hydro excavating method.

Requirements:

Where directed by the engineer, the contractor shall locate the outer edge of the sewer using a hydro excavation method. The contractor shall use a 6" suction line for the removal of excavated material. The contractor shall be responsible for all water usage and disposing of the excavated material. Contractor shall be responsible for replacing excavated soil in hole if excavation is outside the limits of the 24" diameter augured foundation hole.

Any existing utilities damaged during excavation operations shall be repaired or replaced at the contractor's expense, no additional compensation shall be allowed.

Method of Measurement:

This work shall be measured per vertical Foot for EXPLORATION EXCAVATION (UTILITY) excavated regardless of the soil composition, depth or diameter of hole that is required to verify existing utility location.

Basis of Payment:

This work shall be paid for at the contract unit price per Foot for EXPLORATION EXCAVATION (UTILITY), which shall be payment in full for all work listed herein or as directed by the Engineer.

GFCI, 20 AMP, DUPLEX RECEPTACLE

Description of Work:

This work shall consist of furnishing and installing a ground mounted receptacle where shown on the Contract Drawings.

All related material and labor to the installation of the receptacle shall be included (device box, receptacle, in-use rated cover, rigid galvanized steel conduit, transition coupling, excavation, backfill, disposal of surplus excavate material, etc.) The wiring and HDPE conduit will be paid for separately.

Materials:

The receptacle shall be a single dual outlet, 20-amp, 120 volt GFI type installed in a double gang cast aluminum type "FD" device box with a die cast aluminum in-use rated weather proof cover as shown on the drawings. The box shall be supported by two (2) rigid galvanized steel conduits. The box cover and above grade conduits shall be primed and painted black with an approved exterior black paint. All materials shall be in accordance with the contract plan drawings and requirements.

Construction Requirements:

All work shall be installed as shown on the contract plan drawings, N.E.C., and in accordance with Sections 801, 810, 811 and 817 of the Standard Specifications.

The Contractor shall be responsible for coordinating all work.

Method of Measurement:

This work shall be measured per Each for GFCI, 20 AMP, DUPLEX RECEPTACLE.

Basis of Payment:

This work shall be paid for at the contract unit price per Each for GFCI, 20 AMP, DUPLEX RECEPTACLE, which shall be payment in full for all work listed herein.

OUTLET SPECIAL

Description of Work:

This work shall consist of furnishing and installing a ground mounted receptacle where shown on the Contract Drawings.

All related material and labor to the installation of the receptacle shall be included (device box, receptacle, in-use rated cover, rigid galvanized steel conduit, transition coupling, excavation, backfill, disposal of surplus excavate material, etc.) The wiring and HDPE conduit will be paid for separately.

Materials:

The receptacle shall be a double dual outlet, 20-amp, 120 volt GFI type installed in a double gang cast aluminum type “FD” device box with a die cast aluminum in-use rated weather proof cover as shown on the drawings. The box shall be supported by two (2) rigid galvanized steel conduits. The box cover and above grade conduits shall be primed and painted black with an approved exterior black paint. All materials shall be in accordance with the contract plan drawings and requirements.

Construction Requirements:

All work shall be installed as shown on the contract plan drawings, N.E.C., and in accordance with Sections 801, 810, 811 and 817 of the Standard Specifications.

The Contractor shall be responsible for coordinating all work.

Method of Measurement:

This work shall be measured per Each for OUTLET SPECIAL.

Basis of Payment:

This work shall be paid for at the contract unit price per Each for OUTLET SPECIAL, which shall be payment in full for all work listed herein.

HANDHOLE, COMPOSITE CONCRETE (SPECIAL)

Description of Work:

This work shall consist of furnishing and installing a 11” x 17” x 18” deep composite concrete handhole as shown on the plans or directed by the Engineer. All work related to the installation of the handhole shall be included (excavation, installation of handhole and cover, gravel french drain, backfill, disposal of surplus excavate material, etc.).

Materials:

All materials shall be in accordance with the contract plan drawings and requirements

Construction Requirements:

The handhole shall be precast constructed of polymer concrete. The box and lid shall meet or exceed ANSI Tier 15 loading requirements and also be tested in accordance with the latest edition of NASI/SCTE 77. The box shall be placed on 12” of crushed stone for drainage. The lid shall have a logo as shown on plans. All work shall be installed as shown on the contract plan drawings and in accordance with Sections 814 of the Standard Specifications.

The Contractor shall be responsible for coordinating all work.

Method of Measurement:

This work shall be measured per Each for HANDHOLE, COMPOSITE CONCRETE (SPECIAL)

Basis of Payment:

The work shall be paid for at the contract unit price per Each for HANDHOLE, COMPOSITE CONCRETE (SPECIAL), which price shall be payment in full for all material, labor and any other items required to complete the work.

LIGHT POLE FOUNDATION, 24” DIAMETER, OFFSET

Description of Work:

This work shall consist of constructing and installing a 24-inch diameter offset concrete light pole foundation where shown on the contract drawings.

Materials and Construction Requirements:

The concrete foundation shall be constructed and installed per the details in the Contract Drawings, and in conformance with Section 836 of the Standard Specifications. Where soil conditions require support to prevent caving in of the shaft sidewall, the contractor shall be responsible for furnishing and installing a full depth form liner at no additional cost.

Method of Measurement:

This work shall be measured per Foot for LIGHT POLE FOUNDATION, 24” DIAMETER, OFFSET, along the vertical and horizontal centerlines of the foundation without overlap.

Basis of Payment:

This work shall be paid for at the contract unit price per Foot for LIGHT POLE FOUNDATION, 24" DIAMETER, OFFSET, which price shall be payment in full for all material, labor and any other items required to complete the work.

LIGHTING STANDARD, TYPE 1

Description of Work:

This item shall consist of furnishing and installing a new decorative light pole with a single decorative arm (complete including pole, decorative base, mast arm, banner arms, receptacle, and all hardware/accessories) on a concrete foundation as shown on the contract drawings.

Materials:

The light pole complete shall be in accordance with the contract plan drawings. The structural design of the light pole shall be in accordance Sections 1069.01 of the Standard Specifications.

Construction Requirements:

All work shall be installed in accordance with Sections 830 of the Standard Specifications, contract plan drawings, NEC, and local ordinances.

Method of Measurement:

This work shall be measured per Each for LIGHTING STANDARD, TYPE 1.

Basis of Payment:

The work shall be paid for at the contract unit price per Each for LIGHTING STANDARD, TYPE 1, which price shall be payment in full for all material, labor and any other items required to complete the work.

The decorative luminaire will be paid for separately.

LIGHTING STANDARD, TYPE 2

Description of Work:

This item shall consist of furnishing and installing a new decorative light pole with a single decorative arm (complete including pole, decorative base, mast arm, banner arms, receptacle, and all hardware/accessories) on a concrete foundation as shown on the contract drawings.

Materials:

The light pole complete shall be in accordance with the contract plan drawings. The structural design of the light pole shall be in accordance Sections 1069.01 of the Standard Specifications.

Construction Requirements:

All work shall be installed in accordance with Sections 830 of the Standard Specifications, contract plan drawings, NEC, and local ordinances

Method of Measurement:

This work shall be measured per Each for LIGHTING STANDARD, TYPE 2.

Basis of Payment:

The work shall be paid for at the contract unit price per Each for LIGHTING STANDARD, TYPE 2, which price shall be payment in full for all material, labor and any other items required to complete the work.

The decorative luminaire will be paid for separately.

LUMINAIRE, LED, SPECIAL

Description of Work:

This work shall consist of furnishing and installing a decorative LED luminaire as shown on the plans. All luminaires shall be LUMEC DOMUS TYPE, of the model No. shown in the plans and as listed here: Lumec DMS 50-80W48LED4K-LE3F-240-DMG-BKTX.

Method of Measurement:

This work shall be measured per Each for LUMINAIRE, LED, SPECIAL.

Basis of Payment:

This work shall be paid for at the contract unit price per Each for LUMINAIRE, LED, SPECIAL, which price shall be payment in full for all material, labor and any other items required to complete the work.

MAINTENANCE OF LIGHTING SYSTEM

Description of Work:

Replace Article 801.11 and 801.12 of the Standard Specifications with the following:

Effective the date the Contractor's activities (electrical or otherwise) at the job site begin, the Contractor shall be responsible for the proper operation and maintenance of all existing and proposed lighting systems which are part of, or which may be affected by the work until final acceptance or as otherwise determined by the Engineer.

Before performing any excavation, removal, or installation work (electrical or otherwise) at the site, the Contractor shall initiate a request for a maintenance transfer and preconstruction inspection, as specified elsewhere herein, to be held in the presence of the Engineer and a representative of the party or parties responsible for maintenance of any lighting systems which may be affected by the work. The request for the maintenance preconstruction inspection shall be made no less than seven (7) calendar days prior to the desired inspection date.

Existing lighting systems, when depicted on the plans, are intended only to indicate the general equipment installation of the systems involved and shall not be construed as an exact representation of the field conditions. It remains the Contractor's responsibility to visit the site to confirm and ascertain the exact condition of the electrical equipment and systems to be maintained.

Maintenance of Existing Lighting Systems

Existing lighting systems. Existing lighting systems shall be defined as any lighting system or part of a lighting system in service at the time of contract Letting. The contract drawings indicate the general extent of any existing lighting, but whether indicated or not, it remains the Contractor's responsibility to ascertain the extent of effort required for compliance with these specifications and failure to do so will not be justification for extra payment or reduced responsibilities.

Existing Lighting Systems Requiring Maintenance.

Village of Oswego – Adams Street Lighting Controller

Extent of Maintenance.

Partial Maintenance. Unless otherwise 'indicated, if the number of circuits affected by the contract is equal to or less than 40% of the total number of circuits in a given controller and the controller is not part of the contract work, the Contractor needs only to maintain the affected circuits. The affected circuits shall be isolated by means of in-line waterproof fuse holders as specified elsewhere and as approved by the Engineer.

Full Maintenance. If the number of circuits affected by the contract is greater than 40% of the total number of circuits in a given controller, or if the controller is modified in any way under the contract work, the Contractor shall maintain the entire controller and all associated circuits.

Maintenance of Proposed Lighting Systems

Proposed Lighting Systems. Proposed lighting systems shall be defined as any lighting system or part of a lighting system, temporary or permanent, which is to be constructed under this contract.

The Contractor shall be fully responsible for maintenance of all items installed under this contract. Maintenance shall include, but not be limited to, any equipment failures or malfunctions as well as equipment damage either by the motoring public, Contractor operations, vandalism, or other means. The potential cost of replacing or repairing any malfunctioning, damaged, or vandalized equipment shall be included in the bid price of this item and will not be paid for separately.

Lighting System Maintenance Operations. The Contractor's responsibility shall include all applicable responsibilities of the Electrical Maintenance Contract, State of Illinois, Department of Transportation, Division of Highways, and District One. These responsibilities shall include the maintenance of lighting units (including sign lighting), cable runs and lighting controls. In the case of a pole knockdown or sign light damage, the Contractor shall promptly clear the lighting unit and circuit discontinuity and restore the system to service. The equipment shall then be re-set by the contractor within the time limits specified herein.

If the equipment damaged by normal vehicular traffic, not contractor operations, is beyond repair and cannot be re-set, the contractor shall replace the equipment in kind with payment made for such equipment under Article 109.04. If the equipment damaged by any construction operations, not normal vehicular traffic, is beyond repair and cannot be re-set, the contractor shall replace the equipment in kind and the cost of the equipment shall be included in the cost of this pay item and shall not be paid for separately.

Responsibilities shall also include weekly night-time patrol of the lighting system, with patrol reports filed immediately with the Engineer and with deficiencies corrected within 24 hours of the patrol. Patrol

reports shall be presented on standard forms as designated by the Engineer. Uncorrected deficiencies may be designated by the Engineer as necessitating emergency repairs as described elsewhere herein.

The following chart lists the maximum response, service restoration, and permanent repair time the Contractor will be allowed to perform corrective action on specific lighting system equipment.

INCIDENT OR PROBLEM	**SERVICE RESPONSE TIME**	**SERVICE RESTORATION TIME**	**PERMANENT REPAIR TIME**
Control cabinet out	1 hour	4 hours	7 Calendar days
Hanging mast arm	1 hour to clear	NA	7 Calendar days
Radio problem	1 hour	4 hours	7 Calendar days
Motorist caused damage or leaning light pole 10 degrees or more	1 hour to clear	4 hours	7 Calendar days
Circuit out – Needs to reset breaker	1 hour	4 hours	NA
Circuit out – Cable trouble	1 hour	24 hours	21 Calendar days
Outage of 3 or more successive lights	1 hour	4 hours	NA
Outage of 75% of lights on one tower	1 hour	4 hours	NA
Outage of light nearest RR crossing approach, Islands and gores	1 hour	4 hours	NA
Outage (single or multiple) found on night outage survey or reported to EMC	NA	NA	7 Calendar days
Navigation light outage	NA	NA	24 hours

- **Service Response Time** -- amount of time from the initial notification to the Contractor until a patrolman physically arrives at the location.
- **Service Restoration Time** – amount of time from the initial notification to the Contractor until the time the system is fully operational again (In cases of motorist caused damage the undamaged portions of the system are operational.)
- **Permanent Repair Time** – amount of time from initial notification to the Contractor until the time permanent repairs are made if the Contractor was required to make temporary repairs to meet the service restoration requirement.

Failure to provide this service will result in liquidated damages of $500 per day per occurrence. In addition, the Department reserves the right to assign any work not completed within this timeframe to the Electrical Maintenance Contractor. All costs associated to repair this uncompleted work shall be the responsibility of the Contractor. Failure to pay these costs to the Electrical Maintenance Contractor within one month after the incident will result in additional liquidated damages of $500 per month per

occurrence. Unpaid bills will be deducted from any monies owed to the Contractor. Repeated failures and/or a gross failure of maintenance shall result in the State's Electrical Maintenance Contractor being directed to correct all deficiencies and the resulting costs deducted from any monies owed the contractor.

Damage caused by the Contractor's operations shall be repaired at no additional cost to the Contract.

Operation of Lighting. The lighting shall be operational every night, dusk to dawn. Duplicate lighting systems (such as temporary lighting and proposed new lighting) shall not be operated simultaneously. Lighting systems shall not be kept in operation during long daytime periods.

Method of Measurement:

This work shall be measured per calendar Month for MAINTENANCE OF LIGHTING SYSTEM. The contractor shall demonstrate to the satisfaction of the Engineer that the lighting system is fully operational prior to submitting a pay request. Failure to do so will be grounds for denying the pay request. Months in which the lighting systems are not maintained and not operational will not be paid for. Payment shall not be made retroactively for months in which lighting systems were not operational.

Basis of Payment:

This work shall be paid for at the contract unit price per calendar Month for MAINTENANCE OF LIGHTING SYSTEM, which shall include all work as described herein.

RELOCATE EXISTING LIGHTING UNIT

Description of Work:

This work shall consist of the removal of an existing light pole, breakaway devices (if applicable), arm(s) and luminaire(s) from the existing concrete foundation and reinstalling on a new concrete foundation as directed by the Engineer due to conflicts with the proposed improvements.

This work shall include:

- Demolish, remove and dispose of the existing concrete foundation and ground rod.
- Install new reinforced concrete foundation and ground rod similar to existing. (Contractor shall verify foundation size, depth and reinforcement required).
- Reroute and extend conduit as required to new pole location. Existing conduit/duct may be spliced. New span(s) of wiring shall be installed as required (no underground splicing of wiring shall be allowed). Wiring size/type/quantity shall be same as existing and shall be XLP-TYPE USE as a minimum.
- Replace existing pole wiring as directed by the Engineer, and if required and shall be XLP-TYPE USE.
- Reconnection (splicing) of the existing lighting unit shall be done using new connectors/fusing with same ratings as existing.
- Electrical testing shall be included in this work. The insulation resistance values shall be same or higher than existing. The resistance of the system ground shall not exceed existing values (required 2.0 ohms or less).

- All disturbed areas shall be restored to their original condition.

All work shall be in accordance with Sections 801, 806, 810, 816, 817, 819, 821, 830, 836, 842 and 844 of the Standard Specifications. Work shall also be in accordance with all requirements of the National Electrical Code and the governing authority.

Method of Measurement:

This work shall be measured per Each for RELOCATE EXISTING LIGHTING UNIT.

Basis of Payment:

This work shall be paid for at the contract unit price per Each for RELOCATE EXISTING LIGHTING UNIT, which price will be payment in full for all materials, equipment and labor needed to perform the work described herein.

REMOVE EXISTING CABLE

Description of Work:

This work shall consist of removing existing electric cables from conduit at the locations shown on the plans and disposing of them. All electric cables shall be disconnected from their source and removed all together from the conduit.

Construction Requirements:

The Contractor shall be responsible for verifying the upstream source of power, and downstream electrical equipment connected prior to disconnecting.

If cables cannot be removed from the conduit, the Contractor shall inform the engineer.

After cables have been removed, a flexible steel wire mandrel (sized to match conduit) shall be used to clean and swab conduit prior to the installation of new cable (if required). The installation of new cable will be paid for separately.

Work to be performed under this pay item is indicated in contract plan drawings and shall be in conformance with NEC, IDOT and local ordinances.

Method of Measurement:

This work shall be measured per lineal Foot for REMOVE EXISTING CABLE of conduit that cables are removed from (not by the number or total length of cables removed).

Basis of Payment:

The work shall be paid for at the contract unit price per Foot for REMOVE EXISTING CABLE, which price shall be payment in full for all material, labor and any other items required to complete the work.

REMOVAL OF LIGHTING CONTROLLER FOUNDATION

Description of Work:

This work shall consist of removing and disposing of a lighting controller foundation as shown on the plans or directed by the Engineer.

Construction Requirements:

All work shall be performed in accordance with Section 845 of the Standard Specifications.

The entire controller structure shall be completely removed and disposed of. The void area shall be backfilled with approved material, and the surface reconstructed to match the adjoining area. If the controller is located in the sidewalk area, the entire sidewalk square or squares where the controller is located shall be replaced with new sidewalk. Sidewalk removal and replacement will be paid for separately.

Method of Measurement:

This work shall be measured per Each for REMOVAL OF LIGHTING CONTROLLER FOUNDATION.

Basis of Payment:

The work shall be paid for at the contract unit price per Each for REMOVAL OF LIGHTING CONTROLLER FOUNDATION, which shall be payment in full for all work listed herein and as directed by the Owner's Representative.

REMOVAL OF LIGHTING CONTROLLER

Description of Work:

This work shall consist of removing the existing Lighting controller from the existing electric service and disconnections all branch circuit field wiring as shown on the plans or directed by the Engineer and delivered complete to the Village of Oswego Public Works Department.

Construction Requirements:

All work shall be performed in accordance with Section 845 of the Standard Specifications.

The entire Controller and meter fitting shall be completely removed and packaged for safe delivery to the Village. Removal of The Controller foundation is not included in this pay Item and will be paid for separately

Method of Measurement:

This work shall be measured per Each for REMOVE EXISTING LIGHTING CONTROLLER.

Basis of Payment:

The work shall be paid for at the contract unit price per Each for REMOVE EXISTING LIGHTING CONTROLLER, which shall be payment in full for all work listed herein and as directed by the Owner's Representative.

REMOVAL OF ELECTRIC SERVICE INSTALLATION

Description of Work:

This item shall consist of removing electric service to an existing lighting controller.

Materials and Construction Requirements:

The electric service shall be disconnected and removed from existing Village owned Controller, at locations shown on the contract drawings. The contractor shall trace existing service cables and conduit to identify and record the location of services. The contractor shall coordinate and schedule service disconnection with Com Ed. the contractor shall not disconnect or enter into Com Ed owned and maintained equipment.

Existing electrical service cables and conduit shall be cut to a minimum of 1 ft. below grade and abandoned. The contractor may elect to remove cables and salvage, at no additional cost to the owner.

Work shall be performed as indicated in contract drawings and shall be in conformance with Standard Specifications, Com Ed, N.E.C. and local ordinances.

Method of Measurement:

This work shall be measured per Each for REMOVAL OF ELECTRIC SERVICE INSTALLATION.

Basis of Payment:

This work shall be paid for at the contract unit price per Each for REMOVAL OF ELECTRIC SERVICE INSTALLATION which shall be payment in full for all work listed herein or as directed by the Owner. Existing Lighting Controller removal shall be as specified on drawings and paid for separately.

REMOVAL OF LIGHTING LUMINAIRE, SALVAGE

Description of Work:

This item shall consist of removing an existing luminaire from an existing light standard, disconnecting wire in existing light pole and returning the luminaire to the Village of Oswego Public Works Department.

Requirements:

Contractor to verify the existing luminaire is operational, the contractor shall disconnect wire in the light pole and make electrically safe until new LED luminaire is installed and operating. The existing branch wiring shall be reused and reconnected to the new luminaire. Work to be performed is shown in the contract plan drawings and shall be in conformance to the N.E.C. and local ordinances.

Method of Measurement:

This work shall be measured per Each for REMOVAL OF LIGHTING LUMINAIRE, SALVAGE.

Basis of Payment:

This work shall be paid for at the contract unit price per Each for REMOVAL OF LIGHTING LUMINAIRE, SALVAGE, which shall be payment in full for all work listed herein or as directed by the Owner.

8/15/2018	Kendall	ASBESTOS ABT-GEN	All	ALL		42.72	43.72	1.5	1.5	2	2	13.77	13.7	0	0.72	0
11/5/2018	Kendall	ASBESTOS ABT-MEC	All	BLD		37.88	40.38	1.5	1.5	2	2	12.92	11.82	0	0.72	0
8/15/2018	Kendall	BOILERMAKER	All	BLD		49.46	53.91	2	2	2	2	6.97	20.41	0	0.4	0
8/15/2018	Kendall	BRICK MASON	All	BLD		46.19	50.81	1.5	1.5	2	2	10.65	17.92	0	0.92	0
8/15/2018	Kendall	CARPENTER	All	ALL		47.35	49.35	1.5	1.5	2	2	11.79	18.88	0	0.63	0
8/15/2018	Kendall	CEMENT MASON	All	ALL		45.89	47	2	1.5	2	2	10	21.01	0	0.09	0
8/15/2018	Kendall	CERAMIC TILE FNSHER	All	BLD		39.56	39.56	1.5	1.5	2	2	10.75	12.02	0	0.77	0
8/15/2018	Kendall	COMMUNICATION TECH	All	BLD		40.12		1.5	1.5	2	2	13.31	10.03	0	1.4	0
8/15/2018	Kendall	ELECTRIC PWR EQMT OP	All	ALL		42.59	57.95	1.5	1.5	2	2	5.75	13.21	0	0.75	0
8/15/2018	Kendall	ELECTRIC PWR EQMT OP	ALL	HWY		41.45	56.38	1.5	1.5	2	2	5.5	12.87	0	0.73	
8/15/2018	Kendall	ELECTRIC PWR GRNDMAN	All	ALL		32.86	57.95	1.5	1.5	2	2	5.75	10.2	0	0.58	0
8/15/2018	Kendall	ELECTRIC PWR GRNDMAN	ALL	HWY		32	56.38	1.5	1.5	2	2	5.5	9.92	0	0.66	
8/15/2018	Kendall	ELECTRIC PWR LINEMAN	All	ALL		51.06	57.95	1.5	1.5	2	2	5.75	15.85	0	0.9	0
8/15/2018	Kendall	ELECTRIC PWR LINEMAN	ALL	HWY		49.67	56.38	1.5	1.5	2	2	5.5	15.4	0	0.88	
8/15/2018	Kendall	ELECTRIC PWR TRK DRV	All	ALL		34.03	57.95	1.5	1.5	2	2	5.75	10.55	0	0.6	0
8/15/2018	Kendall	ELECTRIC PWR TRK DRV	ALL	HWY		33.14	56.38	1.5	1.5	2	2	5.5	10.29	0	0.59	
8/15/2018	Kendall	ELECTRICIAN	All	BLD		47.72	51.97	1.5	1.5	2	2	14.81	11.93	0	1.67	2.12
8/15/2018	Kendall	ELEVATOR CONSTRUCTOR	All	BLD		54.85	61.71	2	2	2	2	15.43	16.61	4.38	0.61	0
8/15/2018	Kendall	FENCE ERECTOR	ALL	ALL		45.56	49.2	2	2	2	2	11.02	21.51	0	0.7	
2/8/2019	Kendall	GLAZIER	All	BLD		43.85	45.35	1.5	2	2	2	14.17	21.11	0	0.94	0
11/5/2018	Kendall	HT/FROST INSULATOR	All	BLD		50.5	53	1.5	1.5	2	2	12.92	13.16	0	0.72	0
8/15/2018	Kendall	IRON WORKER	All	ALL		45.84	48.13	2	2	2	2	11.52	22.65	0	0.81	0
11/23/2018	Kendall	LABORER	All	ALL		42.72	43.72	1.5	1.5	2	2	13.77	13.7	0	0.72	0
8/15/2018	Kendall	LATHER	All	ALL		47.35	49.35	1.5	1.5	2	2	11.79	20.42	0	0.63	0
8/15/2018	Kendall	MACHINIST	All	BLD		48.38	50.88	1.5	1.5	2	2	7.23	8.95	1.85	1.47	0
8/15/2018	Kendall	MARBLE FINISHERS	All	ALL		34.65	47.7	1.5	1.5	2	2	10.65	16.46	0	0.49	0
8/15/2018	Kendall	MARBLE MASON	All	BLD		45.43	49.97	1.5	1.5	2	2	10.65	17.39	0	0.61	0
11/9/2018	Kendall	MATERIAL TESTER I	ALL	ALL		32.72	32.72	1.5	1.5	2	2	13.77	13.7	0	0.72	0
11/9/2018	Kendall	MATERIALS TESTER II	ALL	ALL		37.72	37.72	1.5	1.5	2	2	13.77	13.7	0	0.72	0
8/15/2018	Kendall	MILLWRIGHT	All	ALL		47.35	49.35	1.5	1.5	2	2	11.79	20.42	0	0.63	0
10/26/2018	Kendall	OPERATING ENGINEER	All	BLD	1	51.1	55.1	2	2	2	2	19.65	15.1	2	1.4	0
8/15/2018	Kendall	OPERATING ENGINEER	All	BLD	2	49.8	55.1	2	2	2	2	19.65	15.1	2	1.4	0
8/15/2018	Kendall	OPERATING ENGINEER	All	BLD	3	47.25	55.1	2	2	2	2	19.65	15.1	2	1.4	0
8/15/2018	Kendall	OPERATING ENGINEER	All	BLD	4	45.5	55.1	2	2	2	2	19.65	15.1	2	1.4	0
8/15/2018	Kendall	OPERATING ENGINEER	All	BLD	5	54.85	55.1	2	2	2	2	19.65	15.1	2	1.4	0
8/15/2018	Kendall	OPERATING ENGINEER	All	BLD	6	52.1	55.1	2	2	2	2	19.65	15.1	2	1.4	0
8/15/2018	Kendall	OPERATING ENGINEER	All	BLD	7	54.1	55.1	2	2	2	2	19.65	15.1	2	1.4	0
8/15/2018	Kendall	OPERATING ENGINEER	All	FLT		38	38	1.5	1.5	2	2	18.8	14.35	2	1.3	0
11/5/2018	Kendall	OPERATING ENGINEER	All	HWY	1	49.3	53.3	1.5	1.5	2	2	19.65	15.1	2	1.4	0
8/15/2018	Kendall	OPERATING ENGINEER	All	HWY	2	48.75	53.3	1.5	1.5	2	2	19.65	15.1	2	1.4	0
8/15/2018	Kendall	OPERATING ENGINEER	All	HWY	3	46.7	53.3	1.5	1.5	2	2	19.65	15.1	2	1.4	0
8/15/2018	Kendall	OPERATING ENGINEER	All	HWY	4	44.3	52.3	1.5	1.5	2	2	18.8	14.35	2	1.3	0
8/15/2018	Kendall	OPERATING ENGINEER	All	HWY	5	43.1		1.5	1.5	2	2	0	0	0	0	36.45
8/15/2018	Kendall	OPERATING ENGINEER	All	HWY	6	52.3	53.3	1.5	1.5	2	2	19.65	15.1	2	1.4	0
8/15/2018	Kendall	OPERATING ENGINEER	All	HWY	7	50.3	53.3	1.5	1.5	2	2	19.65	15.1	2	1.4	0
8/15/2018	Kendall	ORNAMNTL IRON WORKER	ALL	ALL		45.56	49.2	2	2	2	2	11.02	21.51	0	0.7	
8/15/2018	Kendall	PAINTER	All	ALL		45.28	47.28	1.5	1.5	1.5	1.5	11.55	8.2	0	1.35	0
8/15/2018	Kendall	PAINTER SIGNS	All	BLD		38.2	43.25	1.5	1.5	2	2	2.6	3.25	0	0	0

8/15/2018	Kendall	PILEDRIVER	All	ALL		47.35	49.35	1.5	1.5	2	2	11.79	20.42	0	0.63	0
1/11/2019	Kendall	PIPEFITTER	All	BLD		48.5	51.5	1.5	1.5	2	2	10.05	18.85	0	2.54	0
8/15/2018	Kendall	PLASTERER	All	BLD		43.25	45.85	1.5	1.5	2	2	14.25	16.69	0	1.35	0
10/26/2018	Kendall	PLUMBER	All	BLD		50.2	53.25	1.5	1.5	2	2	14.34	14.42	0	1.31	0
11/23/2018	Kendall	ROOFER	All	BLD		43.65	47.65	1.5	1.5	2	2	9.73	12.44	0	0.53	0
1/18/2019	Kendall	SHEETMETAL WORKER	All	BLD		48.02	50.42	1.5	1.5	2	2	10.75	16.19	0	1.03	3.5
8/15/2018	Kendall	SPRINKLER FITTER	All	BLD		48.1	50.6	1.5	1.5	2	2	12.75	13.65	0	0.55	0
8/15/2018	Kendall	STEEL ERECTOR	ALL	ALL		45.06	48.66	2	2	2	2	10.52	20.76	0	0.7	
8/15/2018	Kendall	STONE MASON	All	BLD		46.19	50.81	1.5	1.5	2	2	10.65	17.92	0	0.92	0
8/15/2018	Kendall	TERRAZZO FINISHER	All	BLD		41.54	41.54	1.5	1.5	2	2	10.75	13.71	0	0.86	0
8/15/2018	Kendall	TERRAZZO MASON	All	BLD		45.38	48.88	1.5	1.5	2	2	10.75	15.17	0	0.89	0
8/15/2018	Kendall	TILE MASON	All	BLD		46.49	50.49	1.5	1.5	2	2	10.75	14.99	0	0.9	0
8/15/2018	Kendall	TRUCK DRIVER	All	ALL	1	37.91		1.5	1.5	2	2	8.1	7.97	0	0.15	0
8/15/2018	Kendall	TRUCK DRIVER	All	ALL	2	38.56	38.96	1.5	1.5	2	2	9.15	10.43	0	0.15	0
8/15/2018	Kendall	TRUCK DRIVER	All	ALL	3	39.8		1.5	1.5	2	2	8.6	10.59	0	0.15	0
8/15/2018	Kendall	TRUCK DRIVER	All	ALL	4	38.96	38.96	1.5	1.5	2	2	9.15	10.43	0	0.15	0
8/15/2018	Kendall	TUCKPOINTER	All	BLD		46	47	1.5	1.5	2	2	8.34	16.81	0	0.93	0

Illinois Department of Transportation

Bureau of Construction
2300 South Dirksen Parkway/Room 322
Springfield, Illinois 62764

Affidavit of Availability
For the Letting of _____

Instructions: Complete this form by either typing or using black ink. "Authorization to Bid" will not be issued unless both sides of this form are completed in detail. Use additional forms as needed to list all work.

Part I. Work Under Contract

List below all work you have under contract as either a prime contractor or a subcontractor. It is required to include all pending low bids not yet awarded or rejected. In a joint venture, list only that portion of the work which is the responsibility of your company. The uncompleted dollar value is to be based upon the most recent engineer's or owners estimate, and must include work subcontracted to others. If no work is contracted, show **NONE.**

	1	2	3	4	Awards Pending	
Contract Number						
Contract With						
Estimated Completion Date						
Total Contract Price						Accumulated Totals
Uncompleted Dollar Value if Firm is the Prime Contractor						
Uncompleted Dollar Value if Firm is the Subcontractor						
				Total Value of All Work		

Part II. Awards Pending and Uncompleted Work to be done with your own forces.

List below the uncompleted dollar value of work for each contract and awards pending to be completed with your own forces. All work subcontracted to others will be listed on the reverse of this form. In a joint venture, list only that portion of the work to be done by your company. If no work is contracted, show NONE.

						Accumulated Totals
Earthwork						
Portland Cement Concrete Paving						
HMA Plant Mix						
HMA Paving						
Clean & Seal Cracks/Joints						
Aggregate Bases & Surfaces						
Highway, R.R. and Waterway Structures						
Drainage						
Electrical						
Cover and Seal Coats						
Concrete Construction						
Landscaping						
Fencing						
Guardrail						
Painting						
Signing						
Cold Milling, Planning & Rotomilling						
Demolition						
Pavement Markings (Paint)						
Other Construction (List)						
						$ 0.00
Totals						

Disclosure of this information is **REQUIRED** to accomplish the statutory purpose as outlined in the "Illinois Procurement Code." Failure to comply will result in non-issuance of an "Authorization To Bid." This form has been approved by the State Forms Management Center.

Part III. Work Subcontracted to Others.

For each contract described in Part I, list all the work you have subcontracted to others.

	1	2	3	4	Awards Pending
Subcontractor					
Type of Work					
Subcontract Price					
Amount Uncompleted					
Subcontractor					
Type of Work					
Subcontract Price					
Amount Uncompleted					
Subcontractor					
Type of Work					
Subcontract Price					
Amount Uncompleted					
Subcontractor					
Type of Work					
Subcontract Price					
Amount Uncompleted					
Subcontractor					
Type of Work					
Subcontract Price					
Amount Uncompleted					
Total Uncompleted					

I, being duly sworn, do hereby declare that this affidavit is a true and correct statement relating to ALL uncompleted contracts of the undersigned for Federal, State, County, City and private work, including ALL subcontract work, ALL pending low bids not yet awarded or rejected and ALL estimated completion dates.

Subscribed and sworn to before me

this _____ day of _____ , _____ Type or Print Name _____

Officer or Director Title

_____ Signed _____

Notary Public

My commission expires _____

Company _____

(Notary Seal)

Address _____

_____

Illinois Department of Transportation

Local Agency Proposal Bid Bond

Route: Various
County: Kendall
Local Agency: Village of Oswego
Section: 18-00053-00-FP

RETURN WITH BID

PAPER BID BOND

WE _____ as PRINCIPAL,

and _____ as SURETY,

are held jointly, severally and firmly bound unto the above Local Agency (hereafter referred to as "LA") in the penal sum of 5% of the total bid price, or for the amount specified in the proposal documents in effect on the date of invitation for bids whichever is the lesser sum. We bind ourselves, our heirs, executors, administrators, successors, and assigns, jointly pay to the LA this sum under the conditions of this instrument.

WHEREAS THE CONDITION OF THE FOREGOING OBLIGATION IS SUCH that, the said PRINCIPAL is submitting a written proposal to the LA acting through its awarding authority for the construction of the work designated as the above section.

THEREFORE if the proposal is accepted and a contract awarded to the PRINCIPAL by the LA for the above designated section and the PRINCIPAL shall within fifteen (15) days after award enter into a formal contract, furnish surety guaranteeing the faithful performance of the work, and furnish evidence of the required insurance coverage, all as provided in the "Standard Specifications for Road and Bridge Construction" and applicable Supplemental Specifications, then this obligation shall become void; otherwise it shall remain in full force and effect.

IN THE EVENT the LA determines the PRINCIPAL has failed to enter into a formal contract in compliance with any requirements set forth in the preceding paragraph, then the LA acting through its awarding authority shall immediately be entitled to recover the full penal sum set out above, together with all court costs, all attorney fees, and any other expense of recovery.

IN TESTIMONY WHEREOF, the said PRINCIPAL and the said SURETY have caused this instrument to be signed by their respective officers this _____ day of _____

Principal

_____ (Company Name) _____ (Company Name)

By: _____ (Signature and Title) By: _____ (Signature and Title)

(If PRINCIPAL is a joint venture of two or more contractors, the company names, and authorized signatures of each contractor must be affixed.)

Surety

_____ (Name of Surety) By: _____ (Signature of Attorney-in-Fact)

STATE OF ILLINOIS,
COUNTY OF _____

I. _____, a Notary Public in and for said county,
do hereby certify that _____
(Insert names of individuals signing on behalf of PRINCIPAL & SURETY)

who are each personally known to me to be the same persons whose names are subscribed to the foregoing instrument on behalf of PRINCIPAL and SURETY, appeared before me this day in person and acknowledged respectively, that they signed and delivered said instruments as their free and voluntary act for the uses and purposes therein set forth.

Given under my hand and notarial seal this _____ day of _____

My commission expires _____ _____ (Notary Public)

ELECTRONIC BID BOND

☐ **Electronic bid bond is allowed (box must be checked by LA if electronic bid bond is allowed)**

The Principal may submit an electronic bid bond, in lieu of completing the above section of the Proposal Bid Bond Form. By providing an electronic bid bond ID code and signing below, the Principal is ensuring the identified electronic bid bond has been executed and the Principal and Surety are firmly bound unto the LA under the conditions of the bid bond as shown above. (If PRINCIPAL is a joint venture of two or more contractors, an electronic bid bond ID code, company/Bidder name title and date must be affixed for each contractor in the venture.)

Electronic Bid Bond ID Code

_____ (Company/Bidder Name)

_____ (Signature and Title) _____ Date

BLR 12230 (Rev. 7/05

RETURN WITH BID

Illinois Department of Transportation

Affidavit of Illinois Business Office

County Kendall

Local Public Agency Village of Oswego

Section Number 18-00053-00-FP

Route Various

State of _____)
) ss.
County of _____)

I, _____ of _____ , _____ ,
(Name of Affiant) (City of Affiant) (State of Affiant

being first duly sworn upon oath, states as follows:

1. That I am the _____ of _____ .
   officer or position bidder
2. That I have personal knowledge of the facts herein stated.
3. That, if selected under this proposal, _____ , will maintain a
   (bidder)

   business office in the State of Illinois which will be located in _____ County, Illinois.
4. That this business office will serve as the primary place of employment for any persons employed in the construction contemplated by this proposal.
5. That this Affidavit is given as a requirement of state law as provided in Section 30-22(8) of the Illinois Procurement Code.

_____
(Signature)

_____
(Print Name of Affiant)

This instrument was acknowledged before me on day of _____ , _____ .

(SEAL)

_____
(Signature of Notary Public)

Illinois Department of Transportation

Apprenticeship or Training Program Certification

Return with Bid

Route	Various
County	Kendall
Local Agency	Village of Oswego
Section	18-00053-00-FP

All contractors are required to complete the following certification:

☐ For this contract proposal or for all groups in this deliver and install proposal.

☐ For the following deliver and install groups in this material proposal:

_____

_____

_____

_____

Illinois Department of Transportation policy, adopted in accordance with the provisions of the Illinois Highway Code, requires this contract to be awarded to the lowest responsive and responsible bidder. The award decision is subject to approval by the Department. In addition to all other responsibility factors, this contract or deliver and install proposal requires all bidders and all bidders' subcontractors to disclose participation in apprenticeship or training programs that are (1) approved by and registered with the United States Department of Labor's Bureau of Apprenticeship and Training, and (2) applicable to the work of the above indicated proposals or groups. Therefore, all bidders are required to complete the following certification:

I. Except as provided in paragraph IV below, the undersigned bidder certifies that it is a participant, either as an individual or as part of a group program, in an approved apprenticeship or training program applicable to each type of work or craft that the bidder will perform with its own employees.

II. The undersigned bidder further certifies for work to be performed by subcontract that each of its subcontractors submitted for approval either (A) is, at the time of such bid, participating in an approved, applicable apprenticeship or training program; or (B) will, prior to commencement of performance of work pursuant to this contract, establish participation in an approved apprenticeship or training program applicable to the work of the subcontract.

III. The undersigned bidder, by inclusion in the list in the space below, certifies the official name of each program sponsor holding the Certificate of Registration for all of the types of work or crafts in which the bidder is a participant and that will be performed with the bidder's employees. Types of work or craft that will be subcontracted shall be included and listed as subcontract work. The list shall also indicate any type of work or craft job category for which there is no applicable apprenticeship or training program available.

_____

_____

_____

_____

_____

IV. Except for any work identified above, any bidder or subcontractor that shall perform all or part of the work of the contract or deliver and install proposal solely by individual owners, partners or members and not by employees to whom the payment of prevailing rates of wages would be required, check the following box, and identify the owner/operator workforce and positions of ownership. ☐

_____

_____

_____

_____

_____

The requirements of this certification and disclosure are a material part of the contract, and the contractor shall require this certification provision to be included in all approved subcontracts. The bidder is responsible for making a complete report and shall make certain that each type of work or craft job category that will be utilized on the project is accounted for and listed. The Department at any time before or after award may require the production of a copy of each applicable Certificate of Registration issued by the United States Department of Labor evidencing such participation by the contractor and any or all of its subcontractors. In order to fulfill the participation requirement, it shall not be necessary that any applicable program sponsor be currently taking or that it will take applications for apprenticeship, training or employment during the performance of the work of this contract or deliver and install proposal.

Bidder: _____ By: _____

(Signature)

Address: _____ Title: _____

REPORT TRANSMITTAL

December 28, 2016

To: Jennifer Hughes, P.E., CFM
Village of Oswego
100 Parkers Mill
Oswego, IL 60543
Phone: 630.551.2366

Re: **Preliminary Geotechnical Report**
Alexander Lumber Site – Due Diligence
59 South Adams Street
Oswego, IL 60543

Rubino Report No. G16.161

Via email: jhughes@oswegoil.org

Dear Ms. Hughes,

Rubino Engineering, Inc. (Rubino) is pleased to submit our Preliminary Geotechnical Report for the proposed Alexander Lumber Site – Due Diligence in Oswego, Illinois.

Report Description

Enclosed is the Preliminary Geotechnical Report including results of field and laboratory testing, as well as preliminary recommendations for foundation design and general site development.

Authorization and Correspondence History

- Rubino Proposal No. Q16.111g dated November 23rd, 2016; Signed and authorized by Dan DiSanto of the Village of Oswego on November 23rd, 2016.

Closing

Rubino appreciates the opportunity to provide preliminary geotechnical services for this project and we look forward to continued participation during the design and in future construction phases of this project.

If you have questions pertaining to this report, or if Rubino may be of further service, please contact our office at (847) 931-1555.

Respectfully submitted,
RUBINO ENGINEERING, INC.

Michelle A. Lipinski, PE
President

michelle.lipinski@rubinoeng.com

MAL/file/ Enclosures

ALEXANDER LUMBER SITE – DUE DILIGENCE

59 SOUTH ADAMS STREET

OSWEGO, ILLINOIS

RUBINO PROJECT NO. G16.161

Preliminary Geotechnical Report

Drilling
Laboratory Testing
Geotechnical Recommendations

PREPARED BY:

rubino ENGINEERING INC.

Michelle A. Lipinski, PE
President
IL No. 062-061241, Exp. 11/30/17

PREPARED FOR:

VILLAGE OF OSWEGO

100 PARKERS MILL

OSWEGO, ILLINOIS

DECEMBER 28TH, 2016

TABLE OF CONTENTS

PROJECT INFORMATION ..... - 1 -
PURPOSE / SCOPE OF SERVICES ..... - 1 -
TABLE 1: DRILLING SCOPE ..... - 2 -
DRILLING, FIELD, AND LABORATORY TEST PROCEDURES ..... - 2 -
EXECUTIVE SUMMARY OF GEOTECHNICAL CONSIDERATIONS ..... - 3 -
SITE AND SUBSURFACE CONDITIONS ..... - 3 -
SITE LOCATION AND DESCRIPTION ..... - 3 -
SUBSURFACE CONDITIONS ..... - 4 -
GROUNDWATER CONDITIONS ..... - 6 -
EVALUATION AND RECOMMENDATIONS ..... - 7 -
UNDOCUMENTED FILL DISCUSSION ..... - 7 -
ORGANIC SOILS DISCUSSION ..... - 7 -
SITE PREPARATION & STABILITY RECOMMENDATIONS ..... - 8 -
FOUNDATION RECOMMENDATIONS ..... - 8 -
DESIGN – SOIL BEARING PRESSURE RANGE ..... - 8 -
DESIGN / CONSTRUCTION – FROST PROTECTION ..... - 9 -
DESIGN – SETTLEMENT ..... - 9 -
RECOMMENDATIONS FOR ADDITIONAL TESTING ..... - 10 -
CLOSING ..... - 10 -

APPENDIX A - DRILLING, FIELD, AND LABORATORY TEST PROCEDURES
APPENDIX B - SITE PREPARATION – CLEARING & GRUBBING
APPENDIX C - FILL RECOMMENDATIONS
APPENDIX D - FOUNDATION CONSTRUCTION RECOMMENDATIONS
APPENDIX E - REPORT LIMITATIONS
APPENDIX F - SOIL CLASSIFICATION GENERAL NOTES
APPENDIX G - SOIL CLASSIFICATION CHART
APPENDIX H – SITE VICINITY MAP BORING LOCATION PLAN
APPENDIX I – SITE PHOTOS
APPENDIX J – BORING LOGS

PROJECT INFORMATION

Rubino understands that the Village of Oswego is planning to purchase the property bordered by S. Harrison Street, W. Washington Street, S. Adams Street, and just north of W. Jackson Street in Oswego, Illinois. According to historical records and the Phase 1 prepared by HLR (submitted as a separate report under HLR project number 16.0805.810 dated December 16, 2016), the site used to be used for an Alexander's Lumber Facility that has been demolished in recent past. There is a stockpile soil of unknown origin on the site.

Preliminary Structural Loads were not received but are based on the following:

- Individual column loads not exceeding 500 kips.
- Bearing wall loads not exceeding 8 kips per lineal foot (klf).
- Grade-supported slab live loads not exceeding 150 psf.
- Site grading including cuts of up to 10 feet and fills being less than 2 feet.

Site Planning Documents received form the Village of Oswego:

- None at this time

Project Correspondence:

- RFP Email from Jennifer Hughes of the Village of Oswego on November 16th, 2016.

The preliminary geotechnical recommendations presented in this report are based on the available project information, boring locations, and the subsurface materials described in this report.

If any of the information on which this report is based is incorrect, please inform Rubino in writing so that we may amend the recommendations presented in this report (if appropriate, and if desired by the client). Rubino will not be responsible for the implementation of our recommendations if we are not notified of changes in the project.

Purpose / Scope of Services

The purpose of this study was to explore the subsurface conditions at the site in order to prepare preliminary geotechnical recommendations pertaining to the future development of the subject property, formerly the Alexander Lumber Site, in Oswego, Illinois.

Rubino's scope of services included the following drilling program:

Table 1: Drilling Scope

Boring Number	DEPTH (FEET BEG*)	Existing Elevation (feet)**	Proposed Final Grade Elevation (feet)
Boring-01	6	603	Unknown at this time
Boring-02	6 ½	608	
Boring-03	9	603	
Boring-04	4	608	
Boring-05	8 ½	605	
Boring-06	4	602	

*BEG = below existing grade / ** Elevations estimated from Google Earth™

Representative soil samples obtained during the field exploration program were transported to the laboratory for additional classification and laboratory testing.

This report briefly outlines the following:

- *Summary of client-provided project information and report basis.*
- *Overview of encountered subsurface conditions.*
- *Overview of field and laboratory tests performed including results.*
- *Preliminary Geotechnical recommendations pertaining to:*
  - *Subgrade preparation and cut / fill recommendations.*
  - *Shallow foundations, including allowable bearing pressure ranges, and estimated settlement ranges*
- *Construction considerations, including temporary excavation and construction control of water.*
- *Deliverables by HLR (Phase 1 ESA, CCDD testing results, and Wetland Screening) are submitted under separate cover.*

DRILLING, FIELD, AND LABORATORY TEST PROCEDURES

HLR selected the number of borings and the boring depths based on environmental screening requirements. Rubino located the borings in the field using a Garmin GPSMap 64s. The borings were advanced utilizing 3 ¼ inch inside-diameter, hollow stem auger drilling methods and soil samples were routinely obtained during the drilling process.

Selected soil samples were tested in the laboratory to determine material properties for this report. Drilling, sampling, and laboratory tests were accomplished in general accordance with ASTM procedures. The following items are further described in the Appendix of this report.

- *Field Penetration Tests and Split-Barrel Sampling of Soils*
- *Field Water Level Measurements*
- *Laboratory Determination of Water (Moisture) Content of Soil by Mass (ASTM D2216)*
- *Laboratory Organic Content by Loss on Ignition (ASTM D2974)*

The laboratory testing program was conducted in general accordance with applicable ASTM specifications. The results of these tests are to be found on the accompanying boring logs located in the Appendix

EXECUTIVE SUMMARY OF GEOTECHNICAL CONSIDERATIONS

The main geotechnical design and construction considerations at this site are:

- The presence of **shallow groundwater**. See *Groundwater Conditions* section for more information.
- The presence of **undocumented fill soils** with highly variable moisture contents and N-values. Please see the *Undocumented fill Discussion* and the *Site Preparation & Fill Recommendations* sections for more details.
- The presence of **relatively shallow bedrock**. Please see *the Site Preparation & Fill Recommendations* and the *Preliminary Foundation Recommendations* sections for more information.
- **Additional field exploration** should be performed once design plans are underway. See the *Recommendations for Additional Testing* section for more information.

SITE AND SUBSURFACE CONDITIONS

Site Location and Description

The general site location of exploration included the property located at 59 south Adams Street in Oswego, Illinois. The site historically has been an Alexander Lumber building and yard.

The property is bordered on the west by South Harrison Street and Hudson Crossing Park, on the east by South Adams Street, on the south by West Washington Street and on the north by an existing bicycle path. The Fox River lies to the west of Hudson Crossing Park and Waubonsie Creek borders the bicycle path to the north.

The site location has an approximate latitude and longitude of 41° 41' 05" N and 88° 21' 14" W, respectively.

Subsurface Conditions

Subsurface conditions generally consisted of highly variable undocumented fill soils consisting of silt, clay, sand, and gravel mixtures of varying composition.

- The undocumented fill was followed by weathered limestone.
- Auger Refusal was encountered at varying elevations across the site.
- Please refer to the boring logs for more detailed information.

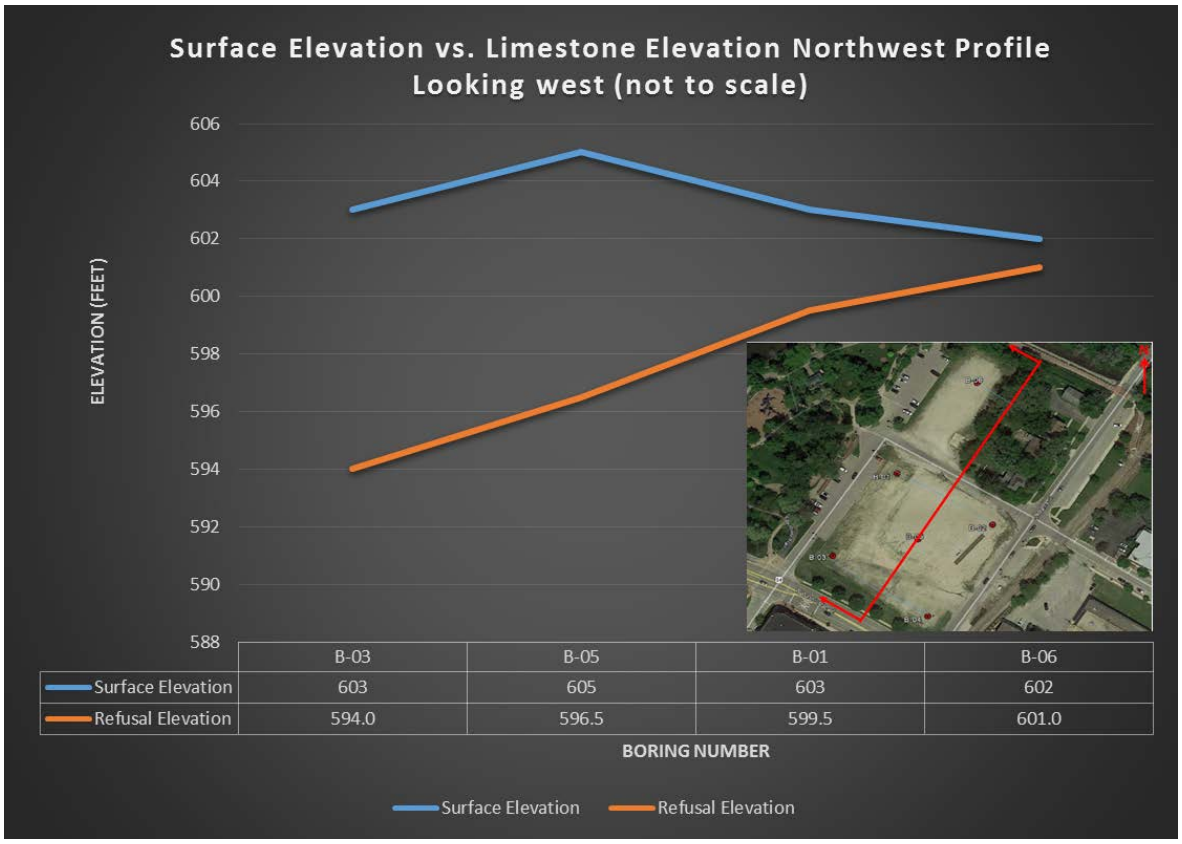
Surface Elevation vs. Limestone Elevation Northwest Profile
Looking west (not to scale)
ELEVATION (FEET)
606
604
602
600
598
596
594
592
590
588
B-03 B-05 B-01 B-06
Surface Elevation 603 605 603 602
Refusal Elevation 594.0 596.5 599.5 601.0
BORING NUMBER
Surface Elevation
Refusal Elevation

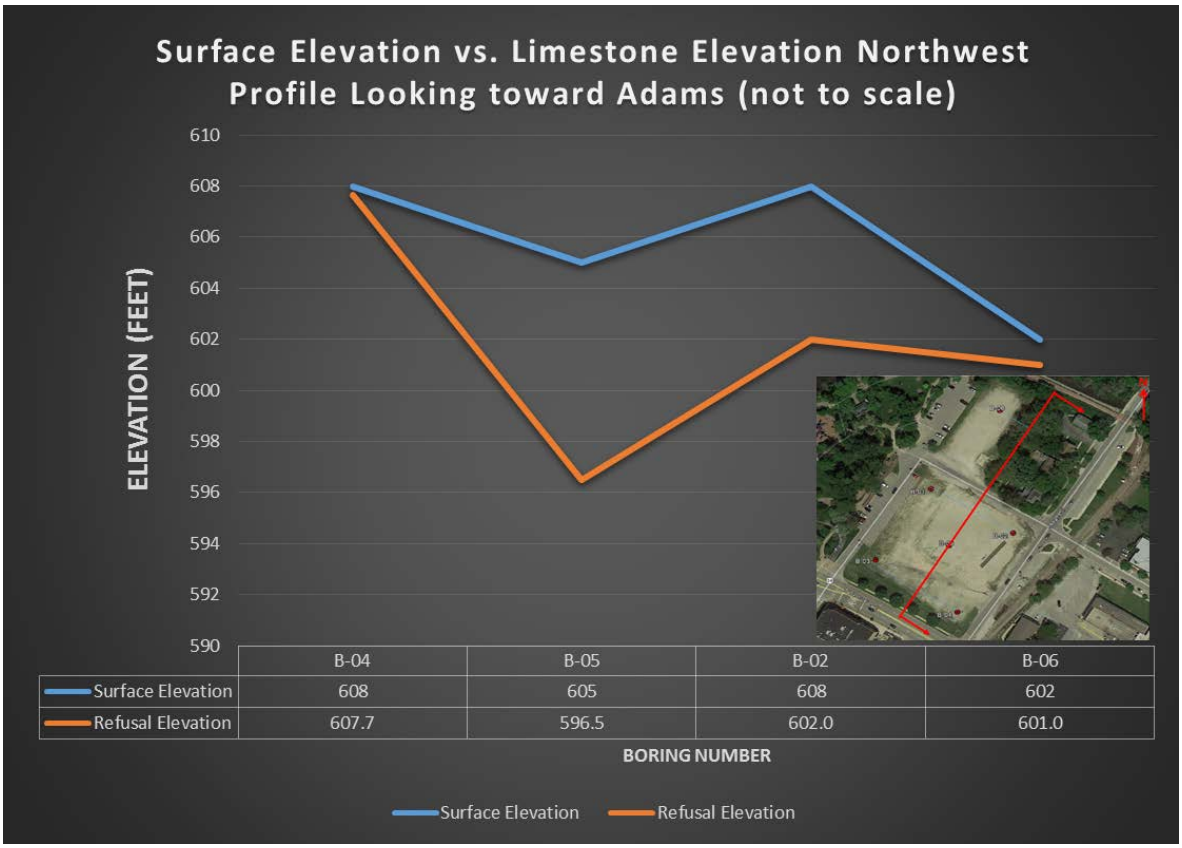
Surface Elevation vs. Limestone Elevation Northwest
Profile Looking toward Adams (not to scale)
ELEVATION (FEET)
610
608
606
604
602
600
598
596
594
592
590
B-04 B-05 B-02 B-06
Surface Elevation 608 605 608 602
Refusal Elevation 607.7 596.5 602.0 601.0
BORING NUMBER
Surface Elevation
Refusal Elevation

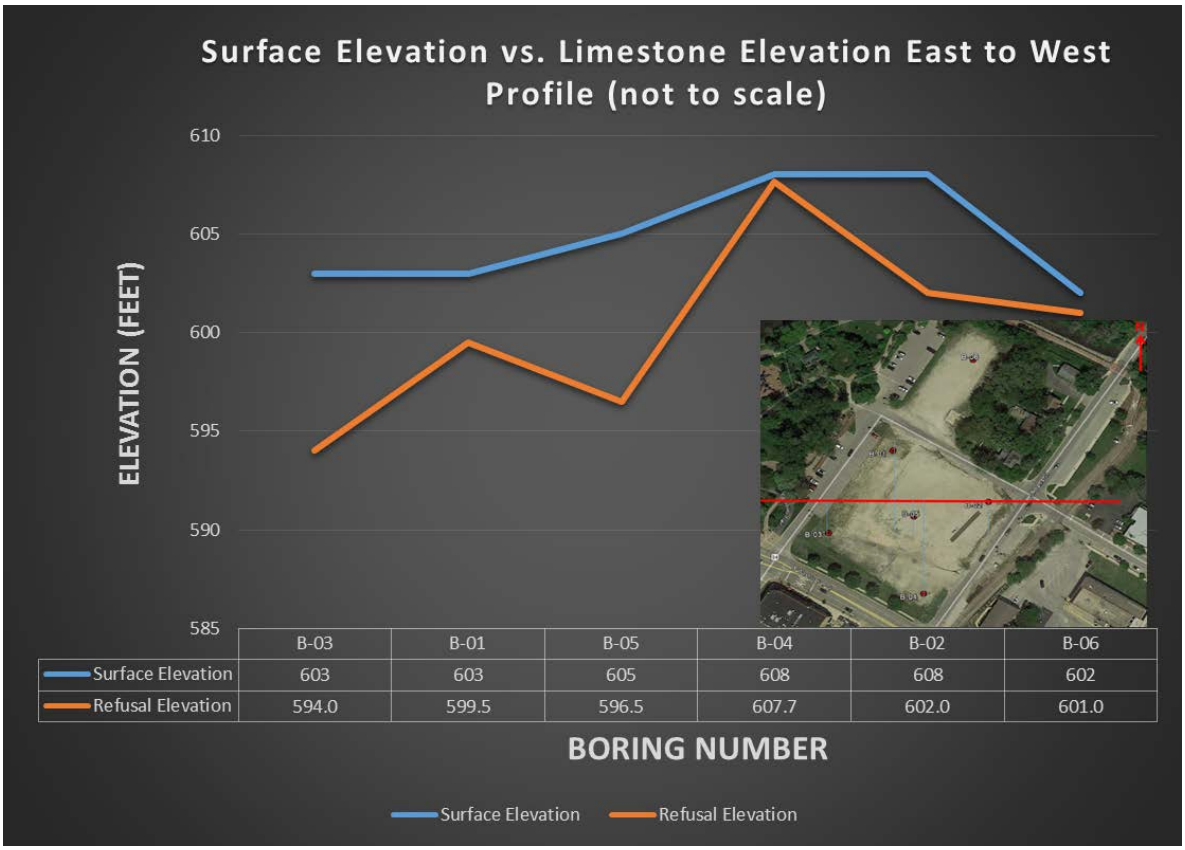

	B-03	B-01	B-05	B-04	B-02	B-06
Surface Elevation	603	603	605	608	608	602
Refusal Elevation	594.0	599.5	596.5	607.7	602.0	601.0

Groundwater Conditions

Groundwater was observed to collect in boring B-01 at the top of the weathered limestone at a depth of approximately 3 ½ feet from the existing ground surface.

Additionally, the natural moisture content of the soils indicates that the undocumented fill soils are at or near saturation and may convey water depending on the time of year.

The proximity to nearby bodies of water such as the Fox River also indicate that groundwater could be encountered at relatively shallow depths at this site.

It should be noted that fluctuations in the groundwater level should be anticipated throughout the year depending on variations in climatological conditions and other factors not apparent at the time the borings were performed. Additionally, discontinuous zones of perched water may exist within the soils. The possibility of groundwater level fluctuation should be considered when developing the design and construction plans for the project.

EVALUATION AND RECOMMENDATIONS

The geotechnical-related recommendations in this report are presented based on the subsurface conditions encountered and Rubino's understanding of the project. Should changes in the project criteria occur, a review must be made by Rubino to determine if modifications to our recommendations will be necessary.

Undocumented Fill Discussion

Undocumented fill was observed in each of the borings and extended to the top of the weathered limestone.

Where existing fill is encountered, Rubino recommends that structure foundations extend through the fill materials and be supported on in-tact bedrock material that has been cored and tested for compressive strength during the design phase of the future structure planned for this parcel.

Undocumented fill is defined as fill that has been placed without being documented as to its placed density and moisture content.

Deleterious materials could include, but are not limited to, bricks, asphalt, concrete, metal, wood, or other building debris.

Undocumented fill materials should be carefully evaluated by proof-rolling and subgrade stability testing (as recommended herein) at the time of construction to document the in-place consistency of these materials.

- Based on the boring information, it is anticipated that these **existing undocumented soils** will need to be **scarified, moisture conditioned, and re-compacted** in order to support slabs on grade or near-surface pavement.

Deleterious materials were not observed within the undocumented fill materials during the drilling operations. Although deleterious materials were not encountered in all the undocumented fill materials, this does not eliminate the possibility that deleterious materials could be present within the undocumented fill materials at other locations along the project.

Organic Soils Discussion

Organic soils were observed within the undocumented fill soils in one of the borings during the drilling operations. There is a possibility that organic soils could be encountered at other locations on the site.

Organic soils can later cause settlement or stability problems. If encountered during construction,

Organic soils are defined as soils containing greater than 10% organic matter, typically consisting of decomposed plant material accumulated under conditions of excessive moisture. Organic soils are dark colored in nature and may exhibit the odor of decaying vegetation.

Rubino recommends that organic soils be removed and replaced with a compacted and documented engineered fill.

Preliminary Site Preparation & Stability Recommendations

The following comments are considered preliminary. To reference general subgrade preparation recommendations and compaction recommendations, please refer to Appendix B and C of this report.

- Final grading and foundation elevations for a proposed development were not available at the time this report was prepared.
- **Existing undocumented fill soils were highly variable** and will likely need to be scarified, moisture conditioned, and re-compacted if they are intended to be used on site as structural fill or as support for proposed structures.
- **Weathered limestone** was able to be augered utilizing our geotechnical drill rig, but may be more difficult to excavate with traditional construction equipment.
    - **Additional sampling** of the weathered and in-tact limestone should be sampled, logged for rock quality designation (RQD) and tested for compressive strength in an AASHTO-Accredited laboratory.
    - **Proposed site utilities** may be affected by the presence of shallow bedrock

Please note that clay subgrade soils are sensitive to moisture and can be easily disturbed by precipitation, groundwater, or construction equipment. Therefore, extra care should be used to avoid disturbing these soils during construction activities.

If cohesive soils become wet or unstable during construction, or if near surface soft subgrade soils are encountered, it is recommended that coarse aggregate be placed on the subgrade until a stable base for compaction of fill is achieved. The coarse aggregate should consist of clean, crushed stone or gravel between ¼ and 3 inches in size. The coarse aggregate should be spread in a maximum of 6-inch layers and consolidated with compaction equipment until it is worked as much as possible into the existing soft or loose soil. This will “lock” up the unstable soil and create a bridging-type affect. Non-woven filter fabric should be placed between open-graded stone and fine-grained soils.

Foundation Recommendations

<u>Design – Soil Bearing Pressure Range</u>

The proposed structure can be supported on shallow, spread footing foundations. As discussed previously, Rubino recommends that foundations extend through undocumented fill soils be supported on tested and competent limestone bedrock.

Bearing capacity of competent limestone bedrock (RQD > 50) may have an allowable bearing capacity greater than 5,000 psf, depending on the unconfined compressive strength of the rock

and the spacing of the existing joints. Bearing capacity estimates are conservative at this time until additional testing and analysis of the bedrock can be performed.

Before designing the foundation, the structural engineer must verify the RQD and unconfined compressive strength of the limestone bedrock at proposed bearing elevations.

Different bearing pressures are given for wall footings vs. column footings due to the difference in the shape factor applied to the *Terzaghi-Meyerhof* general bearing capacity equation as follows:

Wall Footing: $q_{ult} = cN_c + \frac{1}{2}\gamma_t B N_\gamma + \gamma_t D_f N_q$

Square Column Footing: $q_{ult} = 1.25 * cN_c + \frac{1}{2}\gamma_t B * 0.85 * N_\gamma + \gamma_t D_f N_q$

c = cohesion / shear strength

N_c, N_γ, N_q = *Terzaghi Bearing Capacity Factors*

γ_t = *total density*

B = Footing width

D_f = *Depth to bottom of footing*

Net allowable soil bearing pressure is based on dead load plus design live load and represents the pressure that is in excess of the minimum surrounding overburden pressure at the footing base elevation.

Design / Construction – Frost Protection

Exterior footings should be planned to bear a depth of at least 3 ½ feet below the outside final exterior grades to provide adequate frost protection. If the building is constructed during winter months or if the footings will likely be subjected to freezing temperatures after construction is completed, then the footings should be protected from freezing.

Interior footings should be founded at least 2 feet below the final floor slab level for proper confinement of the bearing soils or as recommended above. Both depths should bear on soils described above.

- **C**oncrete for the foundations should ideally be poured right after the foundations have been dug and formed if rain is being predicted. Otherwise, foundations that have already been excavated should be protected from rain or surface runoff water.

Design – Settlement

Settlement calculations should be performed once bearing elevations and structural loads are known. Settlement estimates are difficult to determine when fill of an unknown origin and composition are left in place. There is the possibility that soft and/or compressible soils zones may exist which can cause excessive total and/or differential settlement.

Recommendations for Additional Testing

Additional geotechnical testing should be performed once proposed site and foundation elevations and foundation loads are known. Additional testing should include:

- **Geotechnical soil boring with SPT sampling** in the proposed building pad area, particularly where the highest column loads and deepest design elements (such as elevator pits) are planned.
- **Rock Coring with Rock Quality Designation (RQD) and Unconfined Compressive Strength** (Qu) testing performed on each rock core.
- Additional geotechnical field and laboratory testing may be required depending on the type of construction planned.

Rubino should be retained to provide observation and testing of construction activities involved in the foundation, earthwork, and related activities of this project. Rubino cannot accept responsibility for conditions that deviate from those described in this report, nor for the performance of the foundation system if not engaged to also provide construction observation and testing for this project.

- During subgrade preparation, Rubino recommends that one of our representatives be onsite for typical observations and documentation of proofrolling/proof-compacting of floor slab areas, foundation excavations, and reworking of the unsuitable fill materials, if applicable.
- At a minimum, inspection should include the observation and classification of the soils excavated during construction. The soils observed during construction should be compared to the anticipated soil conditions from the geotechnical report.

CLOSING

The recommendations submitted are based on the available subsurface information obtained by Rubino Engineering, Inc. and design details furnished by the Village of Oswego for the proposed project. If there are any revisions to the plans for this project or if deviations from the subsurface conditions noted in this report are encountered during construction, Rubino should be notified immediately to determine if changes in the foundation recommendations are required. If Rubino is not retained to perform these functions, we will not be responsible for the impact of those conditions on the project.

The scope of services did not include an environmental assessment to determine the presence or absence of wetlands, or hazardous or toxic materials in the soil, bedrock, surface water, groundwater or air, on, or below or around this site. Any statements in this report and/or on the boring logs regarding odors, colors, and/or unusual or suspicious items or conditions are strictly for informational purposes.

After the plans and specifications are more complete, the geotechnical engineer should be retained and provided the opportunity to review the final design plans and specifications to check that our engineering recommendations have been properly incorporated into the design documents. At this time, it may be necessary to submit supplementary recommendations. This report has been prepared for the exclusive use of the Village of Oswego and their consultants for the specific application to the proposed Alexander Lumber Site – Due Diligence in Oswego, Illinois.

APPENDIX A - *DRILLING, FIELD, AND LABORATORY TEST PROCEDURES*

Penetration Tests and Split-Barrel Sampling of Soils

During the sampling procedure, Standard Penetration Tests (SPT's) were performed at regular intervals to obtain the standard penetration (N-value) of the soil. The results of the standard penetration test are used to estimate the relative strength and compressibility of the soil profile components through empirical correlations to the soils' relative density and consistency. The split-barrel sampler obtains a soil sample for classification purposes and laboratory testing, as appropriate for the type of soil obtained.

Water Level Measurements

Water level observations were attempted during and upon completion of the drilling operation using a 100-foot tape measure. The depths of observed water levels in the boreholes are noted on the boring logs presented in the appendix of this report. In the borings where water is unable to be observed during the field activities, in relatively impervious soils, the accurate determination of the groundwater elevation may not be possible even after several days of observation. Seasonal variations, temperature and recent rainfall conditions may influence the levels of the groundwater table and volumes of water will depend on the permeability of the soils.

Ground Surface Elevations

The depths indicated on the attached boring logs are relative to the existing ground surface for each individual boring at the time of the exploration. Elevations referenced have been estimated off of Google Earth™. Copies of the boring logs are located in the Appendix of this report.

ASTM D2216 Water (Moisture) Content of Soil by Mass (Laboratory)

The water content is an important index property used in expressing the phase relationship of solids, water, and air in a given volume of material and can be used to correlate soil behavior with its index properties. In fine grained cohesive soils, the behavior of a given soil type often depends on its natural water content. The water content of a cohesive soil along with its liquid and plastic limits as determined by Atterberg Limit testing are used to express the soil's relative consistency or liquidity index.

ASTM D2974 Standard Test Method for Organic Soils using Loss on Ignition (Laboratory)

These test methods cover the measurement of moisture content, ash content, and organic matter in peats and other organic soils, such as organic clays, silts, and mucks. Ash content of a peat or organic soil sample is determined by igniting the oven-dried sample from the moisture content determination in a muffle furnace at 440°C (Method C) or 750°C (Method D). The substance remaining after ignition is the ash. The ash content is expressed as a percentage of the mass of the oven-dried sample. 2.4 Organic matter is determined by subtracting percent ash content from 100.

APPENDIX B - *SITE PREPARATION – CLEARING & GRUBBING*

Rubino recommends that unsuitable soils or fill be removed from the site, as applicable. Unsuitable soils or fills can be described as, but are not limited to:

- organic soil / topsoil / plants / trees / shrubs / grass
- frozen soil
- existing asphalt or concrete pavement sections
- existing foundations
- building debris
- existing curbs

Stripping operations should extend a minimum of: **5** feet beyond proposed pavement limits

Exceptions: where property limits allow. Notify geotechnical engineer if there are property boundary limitations. Stripping operations should be monitored and documented by a representative of the geotechnical engineer at the time of construction.

Proofrolling:

After stripping and excavating to the proposed subgrade level, as required, the paved parking area should be proof-rolled and scarified and compacted to at least 95 percent of the standard Proctor maximum dry density ASTM D 698 for a depth of at least 8 inches below the surface during a period of dry weather.

Proofrolling Equipment:

Tandem-axle dump truck or similar rubber-tired vehicles are acceptable and should be loaded with at least 9 tons per axle.

Benefits of Proofrolling:

- Aids in providing a firm base for compaction of fill soils
- Helps to delineate soft, loose, or disturbed areas that may exist below subgrade level.

Soils which are observed to rut or deflect excessively (typically greater than 1 inch) under the moving load should either be scarified and re-compacted, or undercut and replaced.

- Scarify and re-compact to 95% with a smooth drum vibratory roller for granular soils, a sheepsfoot roller for cohesive soils or
- Undercut in 6 to 12 inch increments and replace with properly compacted and documented structural fill.
    - Clean, 3-inch stone can be worked and incorporated into soft soils to bridge soft areas due to high moisture content.
    - The 3-inch stone should then be capped with a well-graded granular fill (3/4" with fines or CA-6 in Illinois) or compacted and documented fill soils as described in the Fill Placement section of the Appendix.
- The site may require another proofroll and rework when the subgrade becomes either desiccated, wet, or frozen.

APPENDIX C - *FILL RECOMMENDATIONS*

In general, fill materials should meet the following:

- Standard Proctor maximum dry density >100 pcf
- Free of organic or other deleterious materials
- Have a maximum particle size no greater than 3 inches
- Have a liquid limit <45 and plasticity index <25
- Testing should include areas at least 5 feet outside the parking area perimeters, if applicable
- Each lift of compacted, engineered fill should be tested and documented by a representative of the geotechnical engineer prior to placement of subsequent lifts
- If a fine-grained silt or clay soil is used for fill (CL or ML), close moisture content control will be essential to achieve the recommended degree of compaction
- If water must be added, it should be uniformly applied and thoroughly mixed into the soil by disking or scarifying

Suitable Soil Classifications:

CL, ML, SM, SC-SM, and SW will generally be suitable for use as structural fill.

Unsuitable Soil Classifications:

OL, OH, MH, CH and PT should be considered unsuitable.

Each lift of structural fill added to the site shall be tested and documented under the supervision of a geotechnical engineer in accordance with the following table:

MATERIAL TESTED	PROCTOR TYPE*-1	MIN % DRY DENSITY	PLACEMENT MOISTURE CONTENT RANGE	FREQUENCY OF TESTING*-2	MAXIMUM LOOSE LIFT HEIGHT
Structural Fill (Cohesive & Well-graded Granular) – Building Pad	Standard	98%	-2 to +2 %	1 per 2,500 yd^2 of fill placed	8 inches
Structural Fill (Cohesive & Well-graded Granular) – Parking	Standard	98%	-2 to +3 %	1 per 2,500 yd^2 of fill placed	8 inches
Random Fill (non-load bearing)	Standard	95%	-3 to +3 %	1 per 5,000 yd^2 of fill placed	8 inches
Utility Trench Backfill	Standard	95%	-2 to +2 %	1 per 50 LF of fill placed	6 inches

*-1 The test frequency for the laboratory reference shall be one laboratory Proctor or Relative Density test for each material used on the site. If the borrow or source of fill material changes, a new reference moisture/density test should be performed.

*-2A minimum of one test per lift is recommended unless otherwise specified.

Tested fill materials that do not achieve either the required dry density or moisture content range shall be recorded, the location noted, and reported to the Contractor and Owner. A re-test of that area should be performed after the Contractor performs remedial measures. The above test frequencies should be discussed with the contractor prior to starting the work.

The geotechnical engineer of record can only certify work that was performed under their direct observation, or under the observation of a competent person under their specific direction.

APPENDIX D - *FOUNDATION CONSTRUCTION RECOMMENDATIONS*

Rubino recommends that soils at the bottom of the footing design elevation be observed, documented, and tested by a representative of Rubino prior to concrete placement to evaluate the consistency of the soils in the field with the geotechnical report findings. The remedial procedures described in the following paragraph can be used to provide suitable foundation support where unsuitable material such as soft or loose soils, existing fill, or organic soils are encountered.

After opening, footing excavations should be observed and concrete placed as quickly as possible to avoid exposure of the footing bottoms to wetting and drying. Surface runoff water should be drained away from the excavations and not be allowed to pond. If possible, the foundation concrete should be placed during the same day the excavation is made. If it is required that footing excavations be left open for more than one day, the soils in the excavation should be protected to reduce evaporation or entry of moisture.

If unsuitable bearing soils are encountered in a footing excavation, the footing should be deepened to competent bearing soil and the footing could be lowered, or an over excavation and backfill procedure could be performed. If an over excavation and backfill procedure will be utilized, it would require widening the deepened excavation in all directions at least 8 inches beyond the edges of the footing for each 12 inches of over excavation depth (See "Over Excavation and Backfill Procedure" diagram below).

The over excavation should then be backfilled in a maximum of 8-inches thick loose lifts with suitable granular fill material, such as ¾ -inch stone with fines (CA-6), compacted to at least 98% of the maximum Standard Proctor dry density (ASTM D 698).

Another alternative is to undercut and refill the unsuitable area with flowable mortar up to the design elevation of the footings. The flowable mortar would serve as a protection to the subgrade during construction of the foundations. In this case, widening the footings is not necessary.

Over Excavation and Backfill Procedure

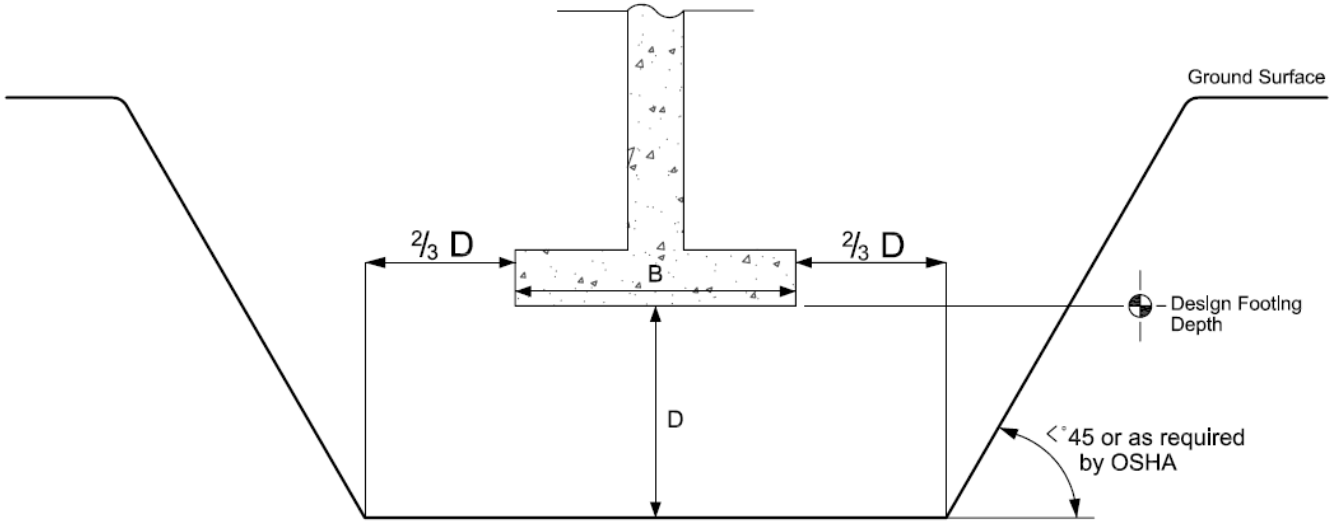

* Drawing not to scale

APPENDIX E - REPORT LIMITATIONS

Subsurface Conditions:

The subsurface description is of a generalized nature to highlight the major subsurface stratification features and material characteristics. The boring logs included in the appendix should be reviewed for specific information at individual boring locations. These records include soil descriptions, stratifications, penetration resistances, locations of the samples and laboratory test data as well as water level information. The stratifications shown on the boring logs represent the conditions only at the actual boring locations. Variations may occur, and should be expected between boring locations. The stratifications represent the approximate boundary between subsurface materials and the actual transition between layers may be gradual. The samples, which were not altered by laboratory testing, will be retained for up to 60 days from the date of this report and then will be discarded.

Geotechnical Risk:

The concept of risk is an important aspect of the geotechnical evaluation. The primary reason for this is that the analytical methods used to develop geotechnical recommendations do not comprise an exact science. The analytical tools that geotechnical engineers use are generally empirical and must be used in conjunction with engineering judgment and experience. Therefore, the solutions and recommendations presented in the geotechnical evaluation should not be considered risk-free, and more importantly, are not a guarantee that the interaction between the soils and the proposed structure will perform as planned. The engineering recommendations, presented in the preceding section, constitute Rubino's professional estimate of the necessary measures for the proposed structure to perform according to the proposed design based on the information generated and reference during this evaluation, and Rubino's experience in working with these conditions.

Warranty:

The geotechnical engineer warrants that the findings, recommendations, specifications, or professional advice contained herein have been made in accordance with generally accepted professional geotechnical engineering practices in the local area. No other warranties are implied or expressed.

Federal Excavation Regulations:

In Federal Register, Volume 54, No. 209 (October 1989), the United States Department of Labor, Occupational Safety and Health Administration (OSHA) amended its "Construction Standards for Excavations, 29 CFR, part 1926, Subpart P". This document was issued to better insure the safety of workmen entering trenches or excavations. This federal regulation mandates that all excavations, whether they be utility trenches, basement excavation or footing excavations, be constructed in accordance with the new OSHA guidelines. It is our understanding that these regulations are being strictly enforced and if they are not closely followed, the owner and the contractor could be liable for substantial penalties.

The contractor is solely responsible for designing and constructing stable, temporary excavations and should shore, slope, or bench the sides of the excavations as required to maintain stability of both the excavation sides and bottom. The contractor's "responsible person," as defined in 29 CFR Part 1926, should evaluate the soil exposed in the excavations as part of the contractor's safety procedures. In no case should slope height, slope inclination, or excavation depth, including utility trench excavation depth, exceed those specified in local, state, and federal safety regulations. Rubino is providing this information solely as a service to our client. Rubino is not assuming responsibility for construction site safety or the contractor's activities; such responsibility is not being implied and should not be inferred.

APPENDIX F - *SOIL CLASSIFICATION GENERAL NOTES*

DRILLING & SAMPLING SYMBOLS:

SS:	Split Spoon - 1 3/8" I.D., 2" O.D., unless otherwise noted	PS:	Piston Sample
ST:	Thin-Walled Tube - 3" O.D., Unless otherwise noted	WS:	Wash Sample
PM:	Pressuremeter	HA:	Hand Auger
RB:	Rock Bit	HS:	Hollow Stem Auger
DB:	Diamond Bit - 4", N, B	BS:	Bulk Sample

Standard "N" Penetration: Blows per foot of a 140 pound hammer falling 30 inches on a 2 inch O.D. split spoon sampler (SS), except where noted.

WATER LEVEL MEASUREMENT SYMBOLS:
Water levels indicated on the boring logs are the levels measured in the borings at the times indicated. In pervious soils, the indicated levels may reflect the location of groundwater. In low permeability soils, the accurate determination of ground water levels is not possible with only short term observations.

DESCRIPTIVE SOIL CLASSIFICATION:
Soil Classification is based on the Unified Soil Classification System as defined in ASTM D-2487 and D-2488. Coarse Grained Soils have more than 50% of their dry weight retained on a #200 sieve; they are described as: boulders, cobbles, gravel or sand. Fine Grained Soils have less than 50% of their dry weight retained on a #200 sieve; they are described as: clays, if they are plastic, and silts if they are slightly plastic or non-plastic. Major constituents may be added as modifiers and minor constituents may be added according to the relative proportions based on grain size. In addition to gradation, coarse grained soils are defined on the basis of their relative in-place density and fine grained soils on the basis of their consistency. Example: Lean clay with sand, trace gravel, stiff (CL); silty sand, trace gravel, medium dense (SM).

CONSISTENCY OF FINE-GRAINED SOILS:

Unconfined Compressive Strength, Qu (tsf)			N-Blows/ft.			Consistency
	<	0.25	< 2			Very Soft
0.25	-	0.5	2	-	4	Soft
0.5	-	1	4	-	8	Medium Stiff
1	-	2	8	-	15	Stiff
2	-	4	15	-	30	Very Stiff
4	-	8	30	-	50	Hard
>	-	8	> 50			Very Hard

RELATIVE DENSITY OF COARSE-GRAINED SOILS

N-Blows/ft.			Relative Density
0	-	3	Very Loose
4	-	9	Loose
10	-	29	Medium Dense
30	-	49	Dense
50	-	80	Very Dense
		80+	Extremely Dense

RELATIVE PROPORTIONS OF SAND & GRAVEL

Descriptive Term	% of Dry Weight		
Trace		<	15
With	15	-	29
Modifier		>	30

RELATIVE PROPORTIONS OF FINES

Descriptive Term	% of Dry Weight		
Trace		<	5
With	5	-	12
Modifier		>	12

*Descriptive Terms apply to components also present in sample

GRAIN SIZE TERMINOLOGY

Major Component	Size Range
Boulders	Over 12 in. (300mm)
Cobbles	12 in. To 3 in. (300mm to 75mm)
Gravel	3 in. To #4 sieve (75mm to 4.75mm)
Sand	#4 to #200 sieve (4.75mm to 0.75mm)

SOIL CLASSIFICATION CHART

NOTE: DUAL SYMBOLS ARE USED TO INDICATE BORDERLINE SOIL CLASSIFICATIONS

MAJOR DIVISIONS			SYMBOLS GRAPH	SYMBOLS LETTER	TYPICAL DESCRIPTIONS
COARSE GRAINED SOILS MORE THAN 50% OF MATERIAL IS LARGER THAN NO. 200 SIEVE SIZE	GRAVEL AND GRAVELLY SOILS MORE THAN 50% OF COARSE FRACTION RETAINED ON NO. 4 SIEVE	CLEAN GRAVELS		GW	WELL-GRADED GRAVELS, GRAVEL - SAND MIXTURES, LITTLE OR NO FINES
		(LITTLE OR NO FINES)		GP	POORLY-GRADED GRAVELS, GRAVEL - SAND MIXTURES, LITTLE OR NO FINES
		GRAVELS WITH FINES		GM	SILTY GRAVELS, GRAVEL - SAND - SILT MIXTURES
		(APPRECIABLE AMOUNT OF FINES)		GC	CLAYEY GRAVELS, GRAVEL - SAND - CLAY MIXTURES
	SAND AND SANDY SOILS MORE THAN 50% OF COARSE FRACTION PASSING ON NO. 4 SIEVE	CLEAN SANDS		SW	WELL-GRADED SANDS, GRAVELLY SANDS, LITTLE OR NO FINES
		(LITTLE OR NO FINES)		SP	POORLY-GRADED SANDS, GRAVELLY SAND, LITTLE OR NO FINES
		SANDS WITH FINES		SM	SILTY SANDS, SAND - SILT MIXTURES
		(APPRECIABLE AMOUNT OF FINES)		SC	CLAYEY SANDS, SAND - CLAY MIXTURES
FINE GRAINED SOILS MORE THAN 50% OF MATERIAL IS SMALLER THAN NO. 200 SIEVE SIZE	SILTS AND CLAYS	LIQUID LIMIT LESS THAN 50		ML	INORGANIC SILTS AND VERY FINE SANDS, ROCK FLOUR, SILTY OR CLAYEY FINE SANDS OR CLAYEY SILTS WITH SLIGHT PLASTICITY
				CL	INORGANIC CLAYS OF LOW TO MEDIUM PLASTICITY, GRAVELLY CLAYS, SANDY CLAYS, SILTY CLAYS, LEAN CLAYS
				OL	ORGANIC SILTS AND ORGANIC SILTY CLAYS OF LOW PLASTICITY
	SILTS AND CLAYS	LIQUID LIMIT GREATER THAN 50		MH	INORGANIC SILTS, MICACEOUS OR DIATOMACEOUS FINE SAND OR SILTY SOILS
				CH	INORGANIC CLAYS OF HIGH PLASTICITY
				OH	ORGANIC CLAYS OF MEDIUM TO HIGH PLASTICITY, ORGANIC SILTS
HIGHLY ORGANIC SOILS				PT	PEAT, HUMUS, SWAMP SOILS WITH HIGH ORGANIC CONTENTS

APPENDIX H – *SITE VICINITY MAP & BORING LOCATION PLAN*

rubino ENGINEERING INC.

665 Tollgate Rd. Unit H
Elgin, Illinois 60123

Project Name:	Alexander Lumber Siter - Due Diligence
Project Location:	59 South Adams Street Oswego, Illinois
Client:	Village of Oswego
Rubino Project # :	G16.161

Site Vicinity Map

rubino ENGINEERING INC.

665 Tollgate Rd. Unit H
Elgin, Illinois 60123

Project Name:	Alexander Lumber Siter - Due Diligence
Project Location:	59 South Adams Street Oswego, Illinois
Client:	Village of Oswego
Rubino Project # :	G16.161

Boring Location Plan

APPENDIX I – *BORING LOGS*

Rubino Engineering, Inc.
665 Tollgate Road, Unit H
Elgin, IL 60123
Telephone: 847-931-1555
Fax: 847-931-1560

LOG OF BORING B-01

Rubino Job No.:	G16.161	Drilling Method:	3 ¼" Hollow Stem Auger
Project:	Alexander Lumber Site - Due Diligence	Sampling Method:	Split Spoon
Location:	59 South Adams Street	Hammer Type:	Automatic
City, State:	Oswego, Illinois	Boring Location:	Alexander Lumber Site, Oswego, Illinois
Client:	Village of Oswego		

WATER LEVELS

While Drilling	3.5 FT
Upon Completion	N/A FT
Delay	N/A FT

Station: N/A
Offset: N/A

Elevation (feet)	Depth, (feet)	Graphic Log	Sample Type	Sample No.	Recovery (inches)	MATERIAL DESCRIPTION	USCS Classification	SPT Blows per 6-inch (SS)	Moisture, %	STANDARD PENETRATION TEST DATA (Moisture, PL, LL; STRENGTH, tsf Qu, Qp)	Additional Remarks
	0					FILL: Black, brown, and gray gravelly SAND with fines					
				1	12	FILL: Black, brown, and gray silty CLAY with sand and gravel		3,2,1 N=3	25		Qp=1.5 tsf 5% Organic Content
						Weathered LIMESTONE					
				2	16			4,14,24 N=38			
	5										
				3	2	Auger and spoon refusal at approximately 6 feet.		50/2"			

Completion Depth:	6.2 ft
Date Boring Started:	12/7/16
Date Boring Completed:	12/7/16
Logged By:	J.W
Drilling Contractor:	Rubino Engineering, Inc.

Sample Types: Auger Cutting, Split-Spoon, Rock Core, Shelby Tube, Hand Auger, Texas Cone

Latitude: 41°41'6.44"N
Longitude: 88°21'14.46"W
Drill Rig: Geoprobe 7822DT
Remarks:

The stratification lines represent approximate boundaries. The transition may be gradual.

Rubino Engineering, Inc.
665 Tollgate Road, Unit H
Elgin, IL 60123
Telephone: 847-931-1555
Fax: 847-931-1560

LOG OF BORING B-02

Rubino Job No.:	G16.161	Drilling Method:	3 ¼" Hollow Stem Auger
Project:	Alexander Lumber Site - Due Diligence	Sampling Method:	Split Spoon
Location:	59 South Adams Street	Hammer Type:	Automatic
City, State:	Oswego, Illinois	Boring Location:	Alexander Lumber Site, Oswego, Illinois
Client:	Village of Oswego		

WATER LEVELS

While Drilling	N/A FT
Upon Completion	N/A FT
Delay	N/A FT

Station: N/A
Offset: N/A

Elevation (feet)	Depth, (feet)	Graphic Log	Sample Type	Sample No.	Recovery (inches)	MATERIAL DESCRIPTION	USCS Classification	SPT Blows per 6-inch (SS)	Moisture, %	Additional Remarks
	0					FILL: Black, brown, and gray gravelly SAND with fines				
				1	14			9,11,5 N=16		
				2	7			3,2,15 N=17		
	5									
				3	3	Weathered LIMESTONE		11,50/2"		
						Auger and spoon refusal at approximately 6 ½ feet. No free groundwater encountered during drilling operations.				

STANDARD PENETRATION TEST DATA
Moisture, PL, LL: 0 – 25 – 50
STRENGTH, tsf: Qu, Qp: 0 – 2.0 – 4.0

Completion Depth:	6.7 ft
Date Boring Started:	12/7/16
Date Boring Completed:	12/7/16
Logged By:	J.W
Drilling Contractor:	Rubino Engineering, Inc.

Sample Types: Auger Cutting, Split-Spoon, Rock Core, Shelby Tube, Hand Auger, Texas Cone

Latitude: 41°41'5.36"N
Longitude: 88°21'12.05"W
Drill Rig: Geoprobe 7822DT
Remarks:

The stratification lines represent approximate boundaries. The transition may be gradual.

Rubino Engineering, Inc.
665 Tollgate Road, Unit H
Elgin, IL 60123
Telephone: 847-931-1555
Fax: 847-931-1560

LOG OF BORING B-03

Rubino Job No.:	G16.161	Drilling Method:	3 ¼" Hollow Stem Auger
Project:	Alexander Lumber Site - Due Diligence	Sampling Method:	Split Spoon
Location:	59 South Adams Street	Hammer Type:	Automatic
City, State:	Oswego, Illinois	Boring Location:	Alexander Lumber Site, Oswego, Illinois
Client:	Village of Oswego		

WATER LEVELS

While Drilling	N/A FT
Upon Completion	N/A FT
Delay	N/A FT

Station: N/A
Offset: N/A

Elevation (feet)	Depth, (feet)	Graphic Log	Sample Type	Sample No.	Recovery (inches)	MATERIAL DESCRIPTION	USCS Classification	SPT Blows per 6-inch (SS)	Moisture, %	Additional Remarks
	0					Approximately 2 inches of TOPSOIL				
						FILL: Black, brown, and gray gravelly SAND with fines				
				1	16			12,14,5 N=19		Qp=0.5 tsf
						FILL: Black, brown, and gray silty CLAY with sand and gravel				
				2	10			2,1,3 N=4	32	Qp=0.5 tsf 7% Organic Content
	5									
				3	18			0,0,0 N=0	31	Qp=0.0 tsf 3% Organic Content
				4	7			3,50/1"	28	3% Organic Content Qp=0.5 tsf
						Weathered LIMESTONE				
						Auger and spoon refusal at approximately 9 feet. No free groundwater encountered during drilling operations.				

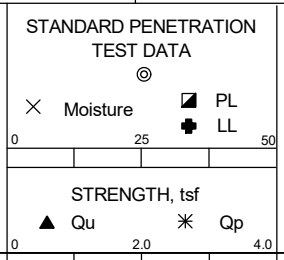

Completion Depth:	9.1 ft
Date Boring Started:	12/7/16
Date Boring Completed:	12/7/16
Logged By:	J.W
Drilling Contractor:	Rubino Engineering, Inc.

Sample Types:
Auger Cutting
Split-Spoon
Rock Core
Shelby Tube
Hand Auger
Texas Cone

Latitude: 41°41'4.70"N
Longitude: 88°21'16.09"W
Drill Rig: Geoprobe 7822DT
Remarks:

The stratification lines represent approximate boundaries. The transition may be gradual.

Rubino Engineering, Inc.
665 Tollgate Road, Unit H
Elgin, IL 60123
Telephone: 847-931-1555
Fax: 847-931-1560

LOG OF BORING B-04

Rubino Job No.:	G16.161	Drilling Method:	3 ¼" Hollow Stem Auger
Project:	Alexander Lumber Site - Due Diligence	Sampling Method:	Split Spoon
Location:	59 South Adams Street	Hammer Type:	Automatic
City, State:	Oswego, Illinois	Boring Location:	Alexander Lumber Site, Oswego, Illinois
Client:	Village of Oswego		

WATER LEVELS

While Drilling	N/A FT
Upon Completion	N/A FT
Delay	N/A FT

Station: N/A
Offset: N/A

Elevation (feet)	Depth, (feet)	Graphic Log	Sample Type	Sample No.	Recovery (inches)	MATERIAL DESCRIPTION	USCS Classification	SPT Blows per 6-inch (SS)	Moisture, %	STANDARD PENETRATION TEST DATA (Moisture, PL, LL; 0–25–50) / STRENGTH, tsf (Qu, Qp; 0–2.0–4.0)	Additional Remarks
	0					Approximately 4 inches of GRAVEL BASE					
						Weathered LIMESTONE with green clay					
				1	12			12,18,50/4"			
				2	6			40,50/1"			
						Auger and spoon refusal at approximately 4 feet. No free standing groundwater encountered during drilling operations.					

Completion Depth:	3.8 ft
Date Boring Started:	12/7/16
Date Boring Completed:	12/7/16
Logged By:	J.W
Drilling Contractor:	Rubino Engineering, Inc.

Sample Types:
Auger Cutting, Split-Spoon, Rock Core, Shelby Tube, Hand Auger, Texas Cone

Latitude: 41°41'3.43"N
Longitude: 88°21'13.69"W
Drill Rig: Geoprobe 7822DT
Remarks:

The stratification lines represent approximate boundaries. The transition may be gradual.

Rubino Engineering, Inc.
665 Tollgate Road, Unit H
Elgin, IL 60123
Telephone: 847-931-1555
Fax: 847-931-1560

LOG OF BORING B-05

Rubino Job No.:	G16.161	Drilling Method:	3 ¼" Hollow Stem Auger
Project:	Alexander Lumber Site - Due Diligence	Sampling Method:	Split Spoon
Location:	59 South Adams Street	Hammer Type:	Automatic
City, State:	Oswego, Illinois	Boring Location:	Alexander Lumber Site, Oswego, Illinois
Client:	Village of Oswego		

WATER LEVELS

While Drilling	N/A FT
Upon Completion	N/A FT
Delay	N/A FT

Station: N/A
Offset: N/A

Elevation (feet)	Depth, (feet)	Graphic Log	Sample Type	Sample No.	Recovery (inches)	MATERIAL DESCRIPTION	USCS Classification	SPT Blows per 6-inch (SS)	Moisture, %	Additional Remarks
	0					Approximately 4 inches of GRAVEL BASE				
						FILL: Black, brown, and gray silty CLAY with sand and gravel				
				1	12			2,3,3 N=6	28	Qp=2.5 tsf 5% Organic Content
				2	16			11,7,5 N=12	17	Qp=2.5 tsf 18% Organic Content
	5									
				3	14			2,2,1 N=3	25	Qp=0.5 tsf 4% Organic Content
				4	3	Weathered LIMESTONE		50/4"		
						Auger and spoon refusal at approximately 8 ½ feet. No free groundwater encountered during drilling operations.				

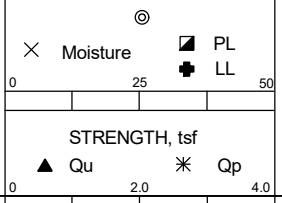

Completion Depth:	8.8 ft	Sample Types:	Latitude: 41°41'5.05"N
Date Boring Started:	12/7/16	Auger Cutting / Shelby Tube	Longitude: 88°21'13.94"W
Date Boring Completed:	12/7/16	Split-Spoon / Hand Auger	Drill Rig: Geoprobe 7822DT
Logged By:	J.W	Rock Core / Texas Cone	Remarks:
Drilling Contractor:	Rubino Engineering, Inc.		

The stratification lines represent approximate boundaries. The transition may be gradual.

Rubino Engineering, Inc.
665 Tollgate Road, Unit H
Elgin, IL 60123
Telephone: 847-931-1555
Fax: 847-931-1560

LOG OF BORING B-06

Rubino Job No.:	G16.161	Drilling Method:	3 ¼" Hollow Stem Auger
Project:	Alexander Lumber Site - Due Diligence	Sampling Method:	Split Spoon
Location:	59 South Adams Street	Hammer Type:	Automatic
City, State:	Oswego, Illinois	Boring Location:	Alexander Lumber Site, Oswego, Illinois
Client:	Village of Oswego		

WATER LEVELS

While Drilling	N/A FT
Upon Completion	N/A FT
Delay	N/A FT

Station: N/A
Offset: N/A

Elevation (feet)	Depth, (feet)	Graphic Log	Sample Type	Sample No.	Recovery (inches)	MATERIAL DESCRIPTION	USCS Classification	SPT Blows per 6-inch (SS)	Moisture, %	STANDARD PENETRATION TEST DATA (Moisture, PL, LL; 0–25–50)	STRENGTH, tsf (Qu, Qp; 0–2.0–4.0)	Additional Remarks
	0					FILL: Black, brown, and gray gravelly SAND with fines						
						Weathered LIMESTONE						
				1	12			12,8,9 N=17				
				2	9			35,50/3"				
						Auger and spoon refusal at approximately 4 feet. No free groundwater encountered during drilling operations.						

Completion Depth:	4.3 ft
Date Boring Started:	12/7/16
Date Boring Completed:	12/7/16
Logged By:	J.W
Drilling Contractor:	Rubino Engineering, Inc.

Sample Types:
Auger Cutting, Split-Spoon, Rock Core, Shelby Tube, Hand Auger, Texas Cone

Latitude: 41°41'8.37"N
Longitude: 88°21'12.44"W
Drill Rig: Geoprobe 7822DT
Remarks:

The stratification lines represent approximate boundaries. The transition may be gradual.

December 22, 2016

Michelle Lipinski
Rubino Engineering, Inc.
665 Tollgate Road, Unit H
Elgin, Illinois 60123

Re: Environmental Services Agreement, Potential Property Acquisition
59 South Adams Street; Oswego, Illinois

Dear Ms. Lipinski:

This letter report summarizes the findings of a limited sub-surface soil sampling conducted for the potential property acquisition at 59 South Adams Street. The property consists of two parcels in Oswego, Kendall County, Illinois. The north parcel is the northeast corner of Harrison Street and Jackson Street, and the south parcel is the northeast corner of Harrison Street and Washington Street. The site is located in Section 17, Township 37 North, Range 8 East of the Third Principal Meridian.

Due to the existence of the railroad ROW adjacent to the subject site, limited sub-surface soil sampling was conducted for a preliminary contamination screening. Seven samples were taken and analyzed. The location of the borings are shown in Figure 1.

Testing performed on the soil samples includes:

Analysis for volatile and semi-volatile organic compounds associated with petroleum derivatives, which includes polycyclic aromatic hydrocarbons (PNAs). PNAs are found in oil, coal, and tar deposits, and are produced as byproducts of fuel burning.

- RCRA (Resource Conservation and Recovery Act) list of metals, including arsenic, barium, cadmium, chromium, lead, mercury, selenium and silver.
- Polychlorinated biphenyls (PCBs), historically used in electrical equipment such as transformers and capacitors.
- Soil pH

The laboratory analysis results were compared to the IEPA Section 742 Tier 1 Soil Remediation Objections for Industrial/Commercial Usage as well as to the Clean Construction Demolition Debris (CCDD) Maximum Allowable Concentration (MAC) tables. A Tier 1 evaluation compares the concentrations within the collected sample against baseline remediation objectives. These criteria establish Illinois Environmental Protection Agency (IEPA) clean-up objectives; disposal criteria may vary from location to location. The MAC tables set limits for what materials can be deposited as CCDD. Soil sampling results can be found within Appendix A of this report.

The sample locations were determined based on the potential for contamination from the railroad ROW and the depth of bedrock within the site. The sample collection sites were spaced evenly through each of the two parcels. The samples were collected from between three to six feet below the existing ground surface. Please review Figure 1 for sampling locations.

Conclusions:

Sample 2 exceeds Tier 1 Values for Benzo(a)pyre. Benzo(a)pyrene is found in coal tar, in combustion engine exhaust fumes, especially from diesel engines, and in all smoke resulting from the combustion of organic material. Sample 2 was taken from the northeast comer of the south parcel, approximately 100 feet west of the railroad ROW and 20 feet south of the north property boundary. The Sample 2 area includes contaminants above the allowable objective, which may require special disposal processes.

Samples 1 and 3 exceed Tier 1 Values for total mercury. Mercury is naturally occurring within the earth's crust and is also generated as a byproduct of various industrial processes including mining, waste combustion, and manufacturing. Sample 1 was taken from the northwest corner of the south parcel, approximately 20 feet from the north and west property lines. Sample 3 was taken from the southwest corner of the south parcel, approximately 20 feet from the west property line and 35 feet from the south property line. The two samples were analyzed for Toxicity Characteristic Leaching Procedure (TCLP) for mercury to determine if they would meet the MAC table levels. The TCLP analysis results for both samples were under the detectable limit, therefore those areas would meet the criteria to be disposed of at a CCDD facility.

Our results should be reviewed and utilized as a part of the off-site disposal mechanics prior to completion of any site improvement activities. Any soil removal from this area will need to be monitored and disposed of properly. Additional sampling and analysis may be beneficial or required prior to soil excavation or removal from the subject site, to determine contamination boundaries. Generally, soil analysis results are only accepted by CCDD or waste management facilities within 12 months of the date of testing. If construction or disposal will occur after December 2017, additional analysis will be required. The scope constituents tested may potentially be reduced depending on the project scope and disposal facility requirements,
If you should have any questions regarding this information, please do not hesitate to contact me.

Yours truly,
HAMPTON, LENZINI AND RENWICK, INC.

By: Karen Kase

Karen Kase
Natural Resources Manager

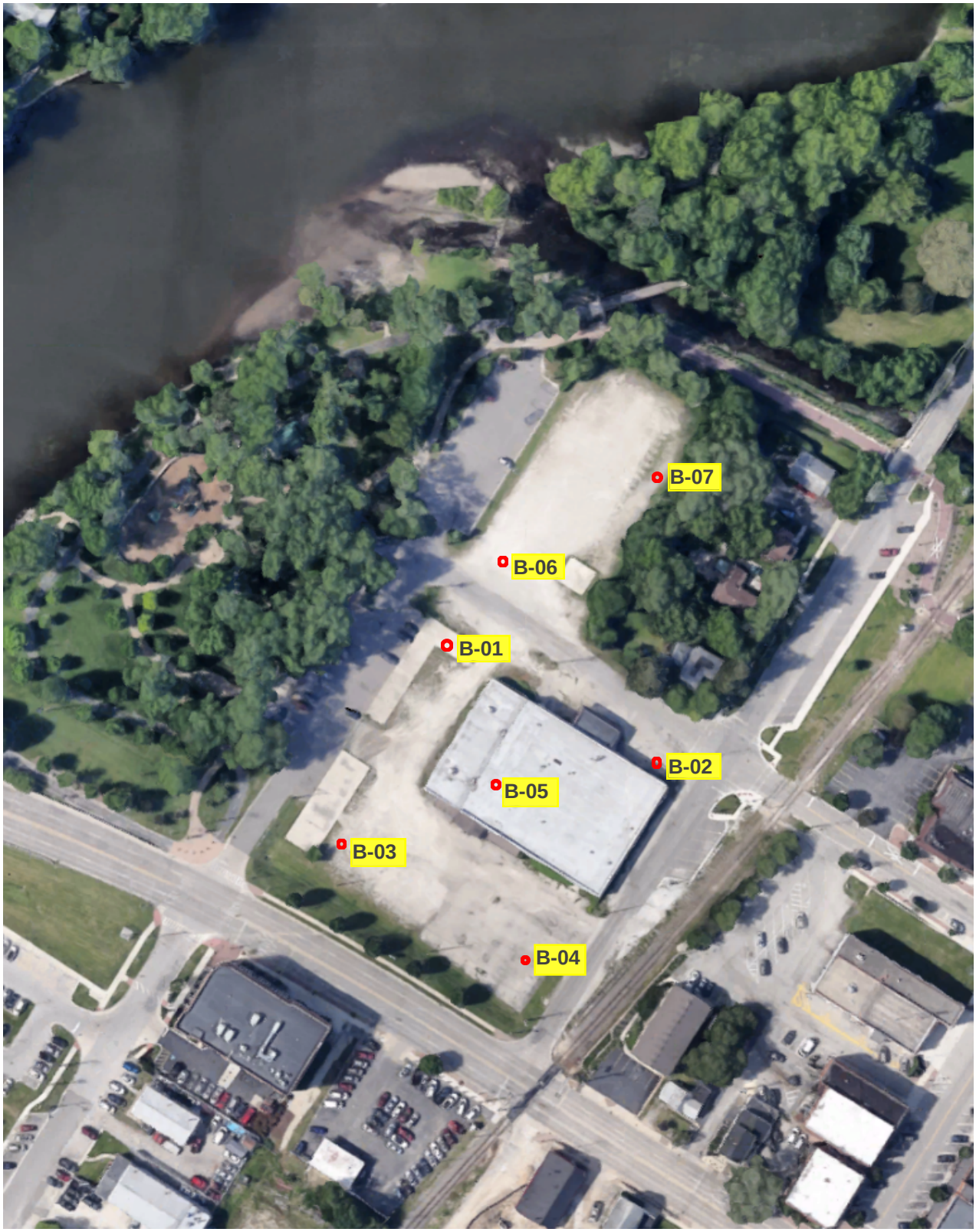

Legend

Approximate Soil Sampling Points

Figure 1

Alexander Lumber Comany

Soil Sampling Locations

Scale: NTS

Hampton, Lenzini and Renwick, inc.
Civil & Structural Engineers . Land Surveyors . Environmental Services
ELGIN . SPRINGFIELD . WOODRIDGE
www.hlrengineering.com

N

Hampton, Lenzini and Renwick, Inc.
Project: 16.0805 Alexander Lun
Work Order: 16L0223

Prairie Analytical Systems, INCORPORATED

	CCDD Limits	16L0223-01	16L0223-02	16L0223-03	16L0223-04	16L0223-05	16L0223-06	16L0223-07
Chemical Name	Limits	B-01 3.5	B-02 5.1	B-03 5.0	B-04 3.0	B-05 6.0	B-06 3.0	B-07 3.0
		12/07/2016	12/07/2016	12/07/2016	12/07/2016	12/07/2016	12/07/2016	12/07/2016
VOAs								
SW8260B Rev2 1996 (mg/Kg dry)								
Acetone	25	< 0.226	< 0.0957	< 0.0911	< 0.0704	< 0.0514	0.329	< 0.0466
Benzene	0.03	< 0.00451	< 0.00479	< 0.00456	< 0.00352	< 0.00514	< 0.00500	< 0.00458
Bromodichloromethane	0.6	< 0.00451	< 0.00479	< 0.00456	< 0.00352	< 0.00514	< 0.00500	< 0.00458
Bromoform	0.8	< 0.00451	< 0.00479	< 0.00456	< 0.00352	< 0.00514	< 0.00500	< 0.00458
Bromomethane	0.2	< 0.00903	< 0.00957	< 0.00911	< 0.00704	< 0.0103	< 0.0100	< 0.00916
2-Butanone	17	< 0.0451	< 0.00957	< 0.00911	< 0.00704	< 0.0103	< 0.0851	< 0.0128
Carbon disulfide	9	< 0.00903	< 0.00957	< 0.00911	< 0.00704	< 0.0103	< 0.0100	< 0.00916
Carbon tetrachloride	0.07	< 0.00451	< 0.00479	< 0.00456	< 0.00352	< 0.00514	< 0.00500	< 0.00458
Chlorobenzene	1	< 0.00451	< 0.00479	< 0.00456	< 0.00352	< 0.00514	< 0.00500	< 0.00458
Chloroethane	~	< 0.00903	< 0.00957	< 0.00911	< 0.00704	< 0.0103	< 0.0100	< 0.00916
Chloroform	0.3	< 0.00451	< 0.00479	< 0.00456	< 0.00352	0.00547	< 0.00500	< 0.00458
Chloromethane	~	< 0.00903	< 0.00957	< 0.00911	< 0.00704	< 0.0103	< 0.0100	< 0.00916
Dibromochloromethane	0.4	< 0.00451	< 0.00479	< 0.00456	< 0.00352	< 0.00514	< 0.00500	< 0.00458
1,1-Dichloroethane	23	< 0.00451	< 0.00479	< 0.00456	< 0.00352	< 0.00514	< 0.00500	< 0.00458
1,2-Dichloroethane	0.02	< 0.00451	< 0.00479	< 0.00456	< 0.00352	< 0.00514	< 0.00500	< 0.00458
1,1-Dichloroethene	0.06	< 0.00451	< 0.00479	< 0.00456	< 0.00352	< 0.00514	< 0.00500	< 0.00458
cis-1,2-Dichloroethene	0.4	< 0.00451	< 0.00479	< 0.00456	< 0.00352	< 0.00514	< 0.00500	< 0.00458
trans-1,2-Dichloroethene	0.7	< 0.00451	< 0.00479	< 0.00456	< 0.00352	< 0.00514	< 0.00500	< 0.00458
1,2-Dichloropropane	0.03	< 0.00451	< 0.00479	< 0.00456	< 0.00352	< 0.00514	< 0.00500	< 0.00458
cis-1,3-Dichloropropene	0.005	< 0.00271	< 0.00287	< 0.00273	< 0.00211	< 0.00308	< 0.00300	< 0.00275
trans-1,3-Dichloropropene	0.005	< 0.00271	< 0.00287	< 0.00273	< 0.00211	< 0.00308	< 0.00300	< 0.00275
Ethylbenzene	13	< 0.00451	< 0.00479	< 0.00456	< 0.00352	< 0.00514	< 0.00500	< 0.00458
2-Hexanone	~	< 0.00451	< 0.00479	< 0.00456	< 0.00352	< 0.00514	< 0.00500	< 0.00458
Methyl tert-butyl ether	0.32	< 0.00451	< 0.00479	< 0.00456	< 0.00352	< 0.00514	< 0.00500	< 0.00458
4-Methyl-2-pentanone	~	< 0.00451	< 0.00479	< 0.00456	< 0.00352	< 0.00514	< 0.00500	< 0.00458
Methylene chloride	0.02	< 0.00451	< 0.00479	< 0.00456	< 0.00352	0.00592	< 0.00500	< 0.00458

Styrene	4	< 0.00451	< 0.00479	< 0.00456	< 0.00352	< 0.00514	< 0.00500	< 0.00458
1,1,2,2-Tetrachloroethane	~	< 0.00181	< 0.00191	< 0.00182	< 0.00141	< 0.00206	< 0.00200	< 0.00183
Tetrachloroethene	0.06	< 0.00451	< 0.00479	< 0.00456	< 0.00352	< 0.00514	< 0.00500	< 0.00458
Toluene	12	< 0.00451	< 0.00479	< 0.00456	< 0.00352	< 0.00514	< 0.00500	< 0.00458
1,1,1-Trichloroethane	2	< 0.00451	< 0.00479	< 0.00456	< 0.00352	< 0.00514	< 0.00500	< 0.00458
1,1,2-Trichloroethane	0.02	< 0.00451	< 0.00479	< 0.00456	< 0.00352	< 0.00514	< 0.00500	< 0.00458
Trichloroethene	0.06	< 0.00451	< 0.00479	< 0.00456	< 0.00352	< 0.00514	< 0.00500	< 0.00458
Vinyl chloride	0.01	< 0.00451	< 0.00479	< 0.00456	< 0.00352	< 0.00514	< 0.00500	< 0.00458
Xylenes (total)	5100	< 0.0135	< 0.0144	< 0.0137	< 0.0106	< 0.0154	< 0.0150	< 0.0137
Notes:								
All results are reported as mg/kg-dry unless otherwise noted.								
Bold/Shaded results indicate concentrations exceeding CCDD MACS								

Hampton, Lenzini and Renwick, Inc.
Project: 16.0805 Alexander Lun
Work Order: 16L0223

Prairie Analytical Systems, INCORPORATED

	CCDD Limits	16L0223-01	16L0223-02	16L0223-03	16L0223-04	16L0223-05	16L0223-06	16L0223-07
Chemical Name	Limits	B-01 3.5	B-02 5.1	B-03 5.0	B-04 3.0	B-05 6.0	B-06 3.0	B-07 3.0
		12/07/2016	12/07/2016	12/07/2016	12/07/2016	12/07/2016	12/07/2016	12/07/2016
BNAs								
SW8270C (mg/Kg dry)								
Acenaphthene	570	< 0.394	< 0.369	< 0.416	< 0.356	< 0.406	< 0.384	< 0.360
Acenaphthylene	85	< 0.394	< 0.369	< 0.416	< 0.356	< 0.406	< 0.384	< 0.360
Anthracene	12000	< 0.394	< 0.369	< 0.416	< 0.356	< 0.406	< 0.384	< 0.360
Benzo(a)anthracene	0.9	< 0.394	< 0.369	< 0.416	< 0.356	< 0.406	< 0.384	< 0.360
Benzo(b)fluoranthene	0.9	< 0.394	< 0.369	< 0.416	< 0.356	< 0.406	< 0.384	< 0.360
Benzo(k)fluoranthene	9	< 0.394	< 0.369	< 0.416	< 0.356	< 0.406	< 0.384	< 0.360
Benzo(g,h,i)perylene	2300	< 0.394	< 0.369	< 0.416	< 0.356	< 0.406	< 0.384	< 0.360
Benzo(a)pyrene	0.09	< 0.0710	**0.115**	< 0.0750	< 0.0641	< 0.0731	< 0.0692	< 0.0648
Bis(2-chloroethoxy)methane	~	< 0.394	< 0.369	< 0.416	< 0.356	< 0.406	< 0.384	< 0.360
Bis(2-chloroethyl)ether	0.66	< 0.394	< 0.369	< 0.416	< 0.356	< 0.406	< 0.384	< 0.360
Bis(2-chloroisopropyl)ether	~	< 0.394	< 0.369	< 0.416	< 0.356	< 0.406	< 0.384	< 0.360
Bis(2-ethylhexyl)phthalate	46	< 0.394	< 0.369	< 0.416	< 0.356	< 0.406	< 0.384	< 0.360
4-Bromophenyl phenyl ether	~	< 0.394	< 0.369	< 0.416	< 0.356	< 0.406	< 0.384	< 0.360
Butyl benzyl phthalate	930	< 0.394	< 0.369	< 0.416	< 0.356	< 0.406	< 0.384	< 0.360
Carbazole	0.6	< 0.394	< 0.369	< 0.416	< 0.356	< 0.406	< 0.384	< 0.360
4-Chloro-3-methylphenol	~	< 0.788	< 0.737	< 0.833	< 0.712	< 0.812	< 0.768	< 0.720
4-Chloroaniline	0.7	< 0.621	< 0.581	< 0.656	< 0.561	< 0.640	< 0.605	< 0.567
2-Chloronaphthalene	~	< 0.394	< 0.369	< 0.416	< 0.356	< 0.406	< 0.384	< 0.360
2-Chlorophenol	1.5	< 0.394	< 0.369	< 0.416	< 0.356	< 0.406	< 0.384	< 0.360
4-Chlorophenyl phenyl ether	~	< 0.394	< 0.369	< 0.416	< 0.356	< 0.406	< 0.384	< 0.360
Chrysene	88	< 0.394	< 0.369	< 0.416	< 0.356	< 0.406	< 0.384	< 0.360
Di-n-butyl phthalate	2300	< 0.394	< 0.369	< 0.416	< 0.356	< 0.406	< 0.384	< 0.360
Di-n-octyl phthalate	1600	< 0.394	< 0.369	< 0.416	< 0.356	< 0.406	< 0.384	< 0.360
Dibenz(a,h)anthracene	0.09	< 0.0710	< 0.0664	< 0.0750	< 0.0641	< 0.0731	< 0.0692	< 0.0648
Dibenzofuran	~	< 1.97	< 1.84	< 2.08	< 1.78	< 2.03	< 1.92	< 1.80
1,2-Dichlorobenzene	17	< 0.394	< 0.369	< 0.416	< 0.356	< 0.406	< 0.384	< 0.360
1,3-Dichlorobenzene	~	< 0.118	< 0.111	< 0.125	< 0.107	< 0.122	< 0.115	< 0.108
1,4-Dichlorobenzene	2	< 0.394	< 0.369	< 0.416	< 0.356	< 0.406	< 0.384	< 0.360
3,3'-Dichlorobenzidine	1.3	< 0.00591	< 0.00553	< 0.00625	< 0.00534	< 0.00609	< 0.00576	< 0.00540

2,4-Dichlorophenol	0.48	< 0.394	< 0.369	< 0.416	< 0.356	< 0.406	< 0.384	< 0.360
Diethyl phthalate	470	< 0.394	< 0.369	< 0.416	< 0.356	< 0.406	< 0.384	< 0.360
Dimethyl phthalate	~	< 0.394	< 0.369	< 0.416	< 0.356	< 0.406	< 0.384	< 0.360
2,4-Dimethylphenol	9	< 0.394	< 0.369	< 0.416	< 0.356	< 0.406	< 0.384	< 0.360
4,6-Dinitro-2-methylphenol	~	< 0.0268	< 0.0251	< 0.0283	< 0.0242	< 0.0276	< 0.0261	< 0.0245
2,4-Dinitrophenol	3.3	< 0.118	< 0.111	< 0.125	< 0.107	< 0.122	< 0.115	< 0.108
2,4-Dinitrotoluene	0.25	< 0.118	< 0.111	< 0.125	< 0.107	< 0.122	< 0.115	< 0.108
2,6-Dinitrotoluene	0.26	< 0.118	< 0.111	< 0.125	< 0.107	< 0.122	< 0.115	< 0.108
Fluoranthene	3100	< 0.394	0.666	< 0.416	< 0.356	< 0.406	< 0.384	< 0.360
Fluorene	560	< 0.394	< 0.369	< 0.416	< 0.356	< 0.406	< 0.384	< 0.360
Hexachlorobenzene	0.4	< 0.118	< 0.111	< 0.125	< 0.107	< 0.122	< 0.115	< 0.108
Hexachlorobutadiene	~	< 0.394	< 0.369	< 0.416	< 0.356	< 0.406	< 0.384	< 0.360
Hexachlorocyclopentadiene	1.1	< 0.788	< 0.737	< 0.833	< 0.712	< 0.812	< 0.768	< 0.720
Hexachloroethane	0.5	< 0.394	< 0.369	< 0.416	< 0.356	< 0.406	< 0.384	< 0.360
Indeno(1,2,3-cd)pyrene	0.9	< 0.394	< 0.369	< 0.416	< 0.356	< 0.406	< 0.384	< 0.360
Isophorone	8	< 0.394	< 0.369	< 0.416	< 0.356	< 0.406	< 0.384	< 0.360
2-Methylnaphthalene	~	< 0.394	< 0.369	< 0.416	< 0.356	< 0.406	< 0.384	< 0.360
2-Methylphenol	15	< 0.394	< 0.369	< 0.416	< 0.356	< 0.406	< 0.384	< 0.360
3 & 4-Methylphenol	~	< 0.118	< 0.111	< 0.125	< 0.107	< 0.122	< 0.115	< 0.108
Naphthalene	1.8	< 0.394	< 0.369	< 0.416	< 0.356	< 0.406	< 0.384	< 0.360
2-Nitroaniline	~	< 0.118	< 0.111	< 0.125	< 0.107	< 0.122	< 0.115	< 0.108
3-Nitroaniline	~	< 0.00591	< 0.00553	< 0.00625	< 0.00534	< 0.00609	< 0.00576	< 0.00540
4-Nitroaniline	~	< 0.0710	< 0.0664	< 0.0750	< 0.0641	< 0.0731	< 0.0692	< 0.0648
Nitrobenzene	0.26	< 0.0710	< 0.0664	< 0.0750	< 0.0641	< 0.0731	< 0.0692	< 0.0648
2-Nitrophenol	~	< 0.394	< 0.369	< 0.416	< 0.356	< 0.406	< 0.384	< 0.360
4-Nitrophenol	~	< 1.97	< 1.84	< 2.08	< 1.78	< 2.03	< 1.92	< 1.80
N-Nitroso-di-n-propylamine	0.0018	< 0.000705	< 0.000660	< 0.000746	< 0.000637	< 0.000727	< 0.000688	< 0.000644
N-Nitrosodiphenylamine	1	< 0.394	< 0.369	< 0.416	< 0.356	< 0.406	< 0.384	< 0.360
Pentachlorophenol	0.02	< 0.0118	< 0.0111	< 0.0125	< 0.0107	< 0.0122	< 0.0115	< 0.0108
Phenanthrene	210	< 0.394	0.472	< 0.416	< 0.356	< 0.406	< 0.384	< 0.360
Phenol	100	< 0.394	< 0.369	< 0.416	< 0.356	< 0.406	< 0.384	< 0.360
Pyrene	2300	< 0.394	0.596	< 0.416	< 0.356	< 0.406	< 0.384	< 0.360
1,2,4-Trichlorobenzene	5	< 0.394	< 0.369	< 0.416	< 0.356	< 0.406	< 0.384	< 0.360
2,4,5-Trichlorophenol	26	< 0.394	< 0.369	< 0.416	< 0.356	< 0.406	< 0.384	< 0.360
2,4,6-Trichlorophenol	0.66	< 0.118	< 0.111	< 0.125	< 0.107	< 0.122	< 0.115	< 0.108
Notes:								
All results are reported as mg/kg-dry unless otherwise noted.								
Bold/Shaded results indicate concentrations exceeding CCDD MACS								

Hampton, Lenzini and Renwick, Inc.
Project: 16.0805 Alexander Lun
Work Order: 16L0223

Prairie Analytical Systems, INCORPORATED

	CCDD Limits	16L0223-01	16L0223-02	16L0223-03	16L0223-04	16L0223-05	16L0223-06	16L0223-07
Chemical Name	Limits	B-01 3.5	B-02 5.1	B-03 5.0	B-04 3.0	B-05 6.0	B-06 3.0	B-07 3.0
		12/07/2016	12/07/2016	12/07/2016	12/07/2016	12/07/2016	12/07/2016	12/07/2016
OTHER ORG								
SW8082 (mg/Kg dry)								
Aroclor 1016	1	< 0.0394	< 0.0364	< 0.0416	< 0.0360	< 0.0405	< 0.0387	< 0.0359
Aroclor 1221		< 0.0394	< 0.0364	< 0.0416	< 0.0360	< 0.0405	< 0.0387	< 0.0359
Aroclor 1232		< 0.0394	< 0.0364	< 0.0416	< 0.0360	< 0.0405	< 0.0387	< 0.0359
Aroclor 1242		< 0.0394	< 0.0364	< 0.0416	< 0.0360	< 0.0405	< 0.0387	< 0.0359
Aroclor 1248		< 0.0394	< 0.0364	< 0.0416	< 0.0360	< 0.0405	< 0.0387	< 0.0359
Aroclor 1254		< 0.0394	< 0.0364	< 0.0416	< 0.0360	< 0.0405	< 0.0387	< 0.0359
Aroclor 1260		< 0.0394	< 0.0364	< 0.0416	< 0.0360	< 0.0405	< 0.0387	< 0.0359

Notes:
All results are reported as mg/kg-dry unless otherwise noted.
Bold/Shaded results indicate concentrations exceeding CCDD MACS

Hampton, Lenzini and Renwick, Inc.
Project: 16.0805 Alexander Lun
Work Order: 16L0223

Prairie Analytical Systems, INCORPORATED

	CCDD Limits	16L0223-01	16L0223-02	16L0223-03	16L0223-04	16L0223-05	16L0223-06	16L0223-07
Chemical Name	Limits	B-01 3.5	B-02 5.1	B-03 5.0	B-04 3.0	B-05 6.0	B-06 3.0	B-07 3.0
		12/07/2016	12/07/2016	12/07/2016	12/07/2016	12/07/2016	12/07/2016	12/07/2016
INORG								
ASTM D2974 (%)								
Percent Solids	~	84.0	90.2	80.0	91.7	81.5	85.9	92.5
SW6010B (mg/Kg dry)								
Arsenic	11.3	5.54	6.45	8.94	6.50	7.53	5.10	2.80
Barium	1500	87.3	35.3	118	73.2	83.0	88.6	14.8
Cadmium	5.2	0.603	0.454	1.41	0.417	0.500	0.516	0.270
Chromium	21	10.2	10.0	10.9	15.3	15.2	10.8	4.12
Lead	107	32.7	13.2	51.2	8.96	14.4	14.1	12.8
SW6020A (mg/Kg dry)								
Mercury	0.1	**0.108**	< 0.0822	**0.174**	< 0.0819	< 0.0937	< 0.0930	< 0.0837
Selenium	1.3	< 0.594	< 0.514	< 0.596	< 0.512	< 0.586	< 0.581	< 0.523
Silver	4.4	< 0.594	< 0.514	< 0.596	< 0.512	< 0.586	< 0.581	< 0.523
SW9045C (pH Units)								
pH	9	7.9	8.3	7.8	8.1	8.5	7.9	7.8
TCLP Mercury	0.002	<0.000600		<0.000600				

Notes:
All results are reported as mg/kg-dry unless otherwise noted.
Bold/Shaded results indicate concentrations exceeding CCDD MACS
Blue results are the alternative analysis and supercede any totals results

Wednesday, December 21, 2016

Karen Kase

Hampton, Lenzini and Renwick, Inc.
380 Shepard Drive
Elgin, IL 60123

TEL: (847) 697-6700

FAX: (847) 697-6753

RE: 16.0805 Alexander Lumber Co Oswego AMENDED REPORT PAS WO: 16L0223

Prairie Analytical Systems, Inc. received 7 sample(s) on 12/7/2016 for the analyses presented in the following report.

All applicable quality control procedures met method specific acceptance criteria unless otherwise noted.

This is an AMENDED REPORT issued subsequent to the orginal report. Please see the case narrative for the nature of the amendment.

This report shall not be reproduced, except in full, without the prior written consent of Prairie Analytical Systems, Inc.

If you have any questions, please feel free to contact me at (217) 753-1148.

Respectfully submitted,

Kristen A. Potter

Project Manager

Certifications: NELAP/NELAC - IL #100323

Prairie Analytical Systems, Inc. **Date:** 12/21/2016

LABORATORY RESULTS

Client: Hampton, Lenzini and Renwick, Inc.
Project: 16.0805 Alexander Lumber Co Oswego **Lab Order:** 16L0223

Case Narrative

This report was originally issued on 12/19/16. Since then the client requested that samples B-01 and B-03 be analyzed for TCLP mercury. This amended report includes the additional data.

Prairie Analytical Systems, Inc. **Date:** 12/21/2016

LABORATORY RESULTS

Client: Hampton, Lenzini and Renwick, Inc.
Project: 16.0805 Alexander Lumber Co Oswego **Lab Order:** 16L0223
Client Sample ID: B-01 3.5 **Lab ID:** 16L0223-01
Collection Date: 12/7/16 10:10 **Matrix:** Solid

Analyses	Result	Limit	Qual	Units	DF	Date Prepared	Date Analyzed	Method	Analyst
Volatile Organic Compounds by GC-MS									
*Acetone	U	0.226		mg/Kg dry	1	12/14/16 10:26	12/14/16 19:11	SW8260B Re	JLS
*Benzene	U	0.00451		mg/Kg dry	1	12/14/16 10:26	12/14/16 19:11	SW8260B Re	JLS
*Bromodichloromethane	U	0.00451		mg/Kg dry	1	12/14/16 10:26	12/14/16 19:11	SW8260B Re	JLS
*Bromoform	U	0.00451		mg/Kg dry	1	12/14/16 10:26	12/14/16 19:11	SW8260B Re	JLS
*Bromomethane	U	0.00903		mg/Kg dry	1	12/14/16 10:26	12/14/16 19:11	SW8260B Re	JLS
*2-Butanone	U	0.0451		mg/Kg dry	1	12/14/16 10:26	12/14/16 19:11	SW8260B Re	JLS
*Carbon disulfide	U	0.00903		mg/Kg dry	1	12/14/16 10:26	12/14/16 19:11	SW8260B Re	JLS
*Carbon tetrachloride	U	0.00451		mg/Kg dry	1	12/14/16 10:26	12/14/16 19:11	SW8260B Re	JLS
*Chlorobenzene	U	0.00451		mg/Kg dry	1	12/14/16 10:26	12/14/16 19:11	SW8260B Re	JLS
*Chloroethane	U	0.00903		mg/Kg dry	1	12/14/16 10:26	12/14/16 19:11	SW8260B Re	JLS
*Chloroform	U	0.00451		mg/Kg dry	1	12/14/16 10:26	12/14/16 19:11	SW8260B Re	JLS
*Chloromethane	U	0.00903		mg/Kg dry	1	12/14/16 10:26	12/14/16 19:11	SW8260B Re	JLS
*Dibromochloromethane	U	0.00451		mg/Kg dry	1	12/14/16 10:26	12/14/16 19:11	SW8260B Re	JLS
*1,1-Dichloroethane	U	0.00451		mg/Kg dry	1	12/14/16 10:26	12/14/16 19:11	SW8260B Re	JLS
*1,2-Dichloroethane	U	0.00451		mg/Kg dry	1	12/14/16 10:26	12/14/16 19:11	SW8260B Re	JLS
*1,1-Dichloroethene	U	0.00451		mg/Kg dry	1	12/14/16 10:26	12/14/16 19:11	SW8260B Re	JLS
*cis-1,2-Dichloroethene	U	0.00451		mg/Kg dry	1	12/14/16 10:26	12/14/16 19:11	SW8260B Re	JLS
trans-1,2-Dichloroethene	U	0.00451		mg/Kg dry	1	12/14/16 10:26	12/14/16 19:11	SW8260B Re	JLS
*1,2-Dichloropropane	U	0.00451		mg/Kg dry	1	12/14/16 10:26	12/14/16 19:11	SW8260B Re	JLS
*cis-1,3-Dichloropropene	U	0.00271		mg/Kg dry	1	12/14/16 10:26	12/14/16 19:11	SW8260B Re	JLS
*trans-1,3-Dichloropropene	U	0.00271		mg/Kg dry	1	12/14/16 10:26	12/14/16 19:11	SW8260B Re	JLS
*Ethylbenzene	U	0.00451		mg/Kg dry	1	12/14/16 10:26	12/14/16 19:11	SW8260B Re	JLS
*2-Hexanone	U	0.00451		mg/Kg dry	1	12/14/16 10:26	12/14/16 19:11	SW8260B Re	JLS
*Methyl tert-butyl ether	U	0.00451		mg/Kg dry	1	12/14/16 10:26	12/14/16 19:11	SW8260B Re	JLS
*4-Methyl-2-pentanone	U	0.00451		mg/Kg dry	1	12/14/16 10:26	12/14/16 19:11	SW8260B Re	JLS
*Methylene chloride	U	0.00451		mg/Kg dry	1	12/14/16 10:26	12/14/16 19:11	SW8260B Re	JLS
*Styrene	U	0.00451		mg/Kg dry	1	12/14/16 10:26	12/14/16 19:11	SW8260B Re	JLS
*1,1,2,2-Tetrachloroethane	U	0.00181		mg/Kg dry	1	12/14/16 10:26	12/14/16 19:11	SW8260B Re	JLS
*Tetrachloroethene	U	0.00451		mg/Kg dry	1	12/14/16 10:26	12/14/16 19:11	SW8260B Re	JLS
*Toluene	U	0.00451		mg/Kg dry	1	12/14/16 10:26	12/14/16 19:11	SW8260B Re	JLS
*1,1,1-Trichloroethane	U	0.00451		mg/Kg dry	1	12/14/16 10:26	12/14/16 19:11	SW8260B Re	JLS
*1,1,2-Trichloroethane	U	0.00451		mg/Kg dry	1	12/14/16 10:26	12/14/16 19:11	SW8260B Re	JLS
Trichloroethene	U	0.00451		mg/Kg dry	1	12/14/16 10:26	12/14/16 19:11	SW8260B Re	JLS
*Vinyl chloride	U	0.00451		mg/Kg dry	1	12/14/16 10:26	12/14/16 19:11	SW8260B Re	JLS
*Xylenes (total)	U	0.0135		mg/Kg dry	1	12/14/16 10:26	12/14/16 19:11	SW8260B Re	JLS
Surrogate: 4-Bromofluorobenzene		*83 %*		*75-120*		12/14/16 10:26	12/14/16 19:11	SW8260B Re	JLS
Surrogate: 1,2-Dichloroethane-d4		*81 %*		*75-119*		12/14/16 10:26	12/14/16 19:11	SW8260B Re	JLS
Surrogate: Toluene-d8		*100 %*		*78-114*		12/14/16 10:26	12/14/16 19:11	SW8260B Re	JLS
Semi-Volatile Organic Compounds by GC-MS									
*Acenaphthene	U	0.394		mg/Kg dry	1	12/9/16 12:34	12/14/16 1:12	SW8270C	JKA
*Acenaphthylene	U	0.394		mg/Kg dry	1	12/9/16 12:34	12/14/16 1:12	SW8270C	JKA
*Anthracene	U	0.394		mg/Kg dry	1	12/9/16 12:34	12/14/16 1:12	SW8270C	JKA
*Benzo(a)anthracene	U	0.394		mg/Kg dry	1	12/9/16 12:34	12/14/16 1:12	SW8270C	JKA
*Benzo(b)fluoranthene	U	0.394		mg/Kg dry	1	12/9/16 12:34	12/14/16 1:12	SW8270C	JKA
*Benzo(k)fluoranthene	U	0.394		mg/Kg dry	1	12/9/16 12:34	12/14/16 1:12	SW8270C	JKA
*Benzo(g,h,i)perylene	U	0.394		mg/Kg dry	1	12/9/16 12:34	12/14/16 1:12	SW8270C	JKA
*Benzo(a)pyrene	U	0.0710		mg/Kg dry	1	12/9/16 12:34	12/14/16 1:12	SW8270C	JKA
*Bis(2-chloroethoxy)methane	U	0.394		mg/Kg dry	1	12/9/16 12:34	12/14/16 1:12	SW8270C	JKA

Prairie Analytical Systems, Inc. **Date:** 12/21/2016

LABORATORY RESULTS

Client: Hampton, Lenzini and Renwick, Inc.
Project: 16.0805 Alexander Lumber Co Oswego **Lab Order:** 16L0223
Client Sample ID: B-01 3.5 **Lab ID:** 16L0223-01
Collection Date: 12/7/16 10:10 **Matrix:** Solid

Analyses	Result	Limit	Qual	Units	DF	Date Prepared	Date Analyzed	Method	Analyst
*Bis(2-chloroethyl)ether	U	0.394		mg/Kg dry	1	12/9/16 12:34	12/14/16 1:12	SW8270C	JKA
*Bis(2-chloroisopropyl)ether	U	0.394		mg/Kg dry	1	12/9/16 12:34	12/14/16 1:12	SW8270C	JKA
*Bis(2-ethylhexyl)phthalate	U	0.394		mg/Kg dry	1	12/9/16 12:34	12/14/16 1:12	SW8270C	JKA
*4-Bromophenyl phenyl ether	U	0.394		mg/Kg dry	1	12/9/16 12:34	12/14/16 1:12	SW8270C	JKA
*Butyl benzyl phthalate	U	0.394		mg/Kg dry	1	12/9/16 12:34	12/14/16 1:12	SW8270C	JKA
*Carbazole	U	0.394		mg/Kg dry	1	12/9/16 12:34	12/14/16 1:12	SW8270C	JKA
*4-Chloro-3-methylphenol	U	0.788		mg/Kg dry	1	12/9/16 12:34	12/14/16 1:12	SW8270C	JKA
*4-Chloroaniline	U	0.621		mg/Kg dry	1	12/9/16 12:34	12/14/16 1:12	SW8270C	JKA
*2-Chloronaphthalene	U	0.394		mg/Kg dry	1	12/9/16 12:34	12/14/16 1:12	SW8270C	JKA
*2-Chlorophenol	U	0.394		mg/Kg dry	1	12/9/16 12:34	12/14/16 1:12	SW8270C	JKA
*4-Chlorophenyl phenyl ether	U	0.394		mg/Kg dry	1	12/9/16 12:34	12/14/16 1:12	SW8270C	JKA
*Chrysene	U	0.394		mg/Kg dry	1	12/9/16 12:34	12/14/16 1:12	SW8270C	JKA
*Di-n-butyl phthalate	U	0.394		mg/Kg dry	1	12/9/16 12:34	12/14/16 1:12	SW8270C	JKA
*Di-n-octyl phthalate	U	0.394		mg/Kg dry	1	12/9/16 12:34	12/14/16 1:12	SW8270C	JKA
*Dibenz(a,h)anthracene	U	0.0710		mg/Kg dry	1	12/9/16 12:34	12/14/16 1:12	SW8270C	JKA
*Dibenzofuran	U	1.97		mg/Kg dry	1	12/9/16 12:34	12/14/16 1:12	SW8270C	JKA
*1,2-Dichlorobenzene	U	0.394		mg/Kg dry	1	12/9/16 12:34	12/14/16 1:12	SW8270C	JKA
*1,3-Dichlorobenzene	U	0.118		mg/Kg dry	1	12/9/16 12:34	12/14/16 1:12	SW8270C	JKA
*1,4-Dichlorobenzene	U	0.394		mg/Kg dry	1	12/9/16 12:34	12/14/16 1:12	SW8270C	JKA
*3,3'-Dichlorobenzidine	U	0.00591		mg/Kg dry	1	12/9/16 12:34	12/14/16 1:12	SW8270C	JKA
*2,4-Dichlorophenol	U	0.394		mg/Kg dry	1	12/9/16 12:34	12/14/16 1:12	SW8270C	JKA
*Diethyl phthalate	U	0.394		mg/Kg dry	1	12/9/16 12:34	12/14/16 1:12	SW8270C	JKA
*Dimethyl phthalate	U	0.394		mg/Kg dry	1	12/9/16 12:34	12/14/16 1:12	SW8270C	JKA
*2,4-Dimethylphenol	U	0.394		mg/Kg dry	1	12/9/16 12:34	12/14/16 1:12	SW8270C	JKA
*4,6-Dinitro-2-methylphenol	U	0.0268	M	mg/Kg dry	1	12/9/16 12:34	12/14/16 1:12	SW8270C	JKA
*2,4-Dinitrophenol	U	0.118		mg/Kg dry	1	12/9/16 12:34	12/14/16 1:12	SW8270C	JKA
*2,4-Dinitrotoluene	U	0.118		mg/Kg dry	1	12/9/16 12:34	12/14/16 1:12	SW8270C	JKA
*2,6-Dinitrotoluene	U	0.118		mg/Kg dry	1	12/9/16 12:34	12/14/16 1:12	SW8270C	JKA
*Fluoranthene	U	0.394		mg/Kg dry	1	12/9/16 12:34	12/14/16 1:12	SW8270C	JKA
*Fluorene	U	0.394		mg/Kg dry	1	12/9/16 12:34	12/14/16 1:12	SW8270C	JKA
*Hexachlorobenzene	U	0.118		mg/Kg dry	1	12/9/16 12:34	12/14/16 1:12	SW8270C	JKA
*Hexachlorobutadiene	U	0.394		mg/Kg dry	1	12/9/16 12:34	12/14/16 1:12	SW8270C	JKA
*Hexachlorocyclopentadiene	U	0.788		mg/Kg dry	1	12/9/16 12:34	12/14/16 1:12	SW8270C	JKA
*Hexachloroethane	U	0.394		mg/Kg dry	1	12/9/16 12:34	12/14/16 1:12	SW8270C	JKA
*Indeno(1,2,3-cd)pyrene	U	0.394		mg/Kg dry	1	12/9/16 12:34	12/14/16 1:12	SW8270C	JKA
*Isophorone	U	0.394		mg/Kg dry	1	12/9/16 12:34	12/14/16 1:12	SW8270C	JKA
*2-Methylnaphthalene	U	0.394		mg/Kg dry	1	12/9/16 12:34	12/14/16 1:12	SW8270C	JKA
*2-Methylphenol	U	0.394		mg/Kg dry	1	12/9/16 12:34	12/14/16 1:12	SW8270C	JKA
3 & 4-Methylphenol	U	0.118		mg/Kg dry	1	12/9/16 12:34	12/14/16 1:12	SW8270C	JKA
*Naphthalene	U	0.394		mg/Kg dry	1	12/9/16 12:34	12/14/16 1:12	SW8270C	JKA
*2-Nitroaniline	U	0.118		mg/Kg dry	1	12/9/16 12:34	12/14/16 1:12	SW8270C	JKA
*3-Nitroaniline	U	0.00591		mg/Kg dry	1	12/9/16 12:34	12/14/16 1:12	SW8270C	JKA
*4-Nitroaniline	U	0.0710		mg/Kg dry	1	12/9/16 12:34	12/14/16 1:12	SW8270C	JKA
*Nitrobenzene	U	0.0710		mg/Kg dry	1	12/9/16 12:34	12/14/16 1:12	SW8270C	JKA
*2-Nitrophenol	U	0.394		mg/Kg dry	1	12/9/16 12:34	12/14/16 1:12	SW8270C	JKA
*4-Nitrophenol	U	1.97		mg/Kg dry	1	12/9/16 12:34	12/14/16 1:12	SW8270C	JKA
*N-Nitroso-di-n-propylamine	U	0.000705	M	mg/Kg dry	1	12/9/16 12:34	12/14/16 1:12	SW8270C	JKA
*N-Nitrosodiphenylamine	U	0.394		mg/Kg dry	1	12/9/16 12:34	12/14/16 1:12	SW8270C	JKA
*Pentachlorophenol	U	0.0118		mg/Kg dry	1	12/9/16 12:34	12/14/16 1:12	SW8270C	JKA
*Phenanthrene	U	0.394		mg/Kg dry	1	12/9/16 12:34	12/14/16 1:12	SW8270C	JKA

Prairie Analytical Systems, Inc. **Date:** 12/21/2016

LABORATORY RESULTS

Client: Hampton, Lenzini and Renwick, Inc.
Project: 16.0805 Alexander Lumber Co Oswego **Lab Order:** 16L0223
Client Sample ID: B-01 3.5 **Lab ID:** 16L0223-01
Collection Date: 12/7/16 10:10 **Matrix:** Solid

Analyses	Result	Limit	Qual	Units	DF	Date Prepared	Date Analyzed	Method	Analyst
*Phenol	U	0.394		mg/Kg dry	1	12/9/16 12:34	12/14/16 1:12	SW8270C	JKA
*Pyrene	U	0.394		mg/Kg dry	1	12/9/16 12:34	12/14/16 1:12	SW8270C	JKA
*1,2,4-Trichlorobenzene	U	0.394		mg/Kg dry	1	12/9/16 12:34	12/14/16 1:12	SW8270C	JKA
*2,4,5-Trichlorophenol	U	0.394		mg/Kg dry	1	12/9/16 12:34	12/14/16 1:12	SW8270C	JKA
*2,4,6-Trichlorophenol	U	0.118		mg/Kg dry	1	12/9/16 12:34	12/14/16 1:12	SW8270C	JKA
Surrogate: 2-Fluorobiphenyl		*86 %*		*40-120*		12/9/16 12:34	12/14/16 1:12	SW8270C	JKA
Surrogate: 2-Fluorophenol		*59 %*		*20-115*		12/9/16 12:34	12/14/16 1:12	SW8270C	JKA
Surrogate: Nitrobenzene-d5		*117 %*		*45-135*		12/9/16 12:34	12/14/16 1:12	SW8270C	JKA
Surrogate: Phenol-d6		*71 %*		*20-100*		12/9/16 12:34	12/14/16 1:12	SW8270C	JKA
Surrogate: 4-Terphenyl-d14		*99 %*		*60-130*		12/9/16 12:34	12/14/16 1:12	SW8270C	JKA
Surrogate: 2,4,6-Tribromophenol		*74 %*		*30-100*		12/9/16 12:34	12/14/16 1:12	SW8270C	JKA
Polychlorinated Biphenyls by GC-ECD									
*Aroclor 1016	U	0.0394		mg/Kg dry	1	12/12/16 10:33	12/12/16 19:40	SW8082	AJD
*Aroclor 1221	U	0.0394		mg/Kg dry	1	12/12/16 10:33	12/12/16 19:40	SW8082	AJD
Aroclor 1232	U	0.0394		mg/Kg dry	1	12/12/16 10:33	12/12/16 19:40	SW8082	AJD
*Aroclor 1242	U	0.0394		mg/Kg dry	1	12/12/16 10:33	12/12/16 19:40	SW8082	AJD
*Aroclor 1248	U	0.0394		mg/Kg dry	1	12/12/16 10:33	12/12/16 19:40	SW8082	AJD
*Aroclor 1254	U	0.0394		mg/Kg dry	1	12/12/16 10:33	12/12/16 19:40	SW8082	AJD
*Aroclor 1260	U	0.0394		mg/Kg dry	1	12/12/16 10:33	12/12/16 19:40	SW8082	AJD
Surrogate: Decachlorobiphenyl		*84 %*		*60-140*		12/12/16 10:33	12/12/16 19:40	SW8082	AJD
Surrogate: Tetrachloro-m-xylene		*82 %*		*60-140*		12/12/16 10:33	12/12/16 19:40	SW8082	AJD
Metals by ICP-MS									
***Mercury**	**0.108**	0.0951		mg/Kg dry	2	12/9/16 9:10	12/9/16 14:27	SW6020A	CCD
*Selenium	U	0.594		mg/Kg dry	2	12/9/16 9:10	12/9/16 14:27	SW6020A	CCD
*Silver	U	0.594		mg/Kg dry	2	12/9/16 9:10	12/9/16 14:27	SW6020A	CCD
TCLP Metals by ICP-MS									
*Mercury	U	0.000600		mg/L	3	12/21/16 9:30	12/21/16 14:17	SW6020A	CCD
Metals by ICP									
***Arsenic**	**5.54**	0.594		mg/Kg dry	1	12/9/16 9:10	12/12/16 13:02	SW6010B	JTC
***Barium**	**87.3**	0.297		mg/Kg dry	1	12/9/16 9:10	12/12/16 13:02	SW6010B	JTC
***Cadmium**	**0.603**	0.297		mg/Kg dry	1	12/9/16 9:10	12/12/16 13:02	SW6010B	JTC
***Chromium**	**10.2**	0.297		mg/Kg dry	1	12/9/16 9:10	12/12/16 13:02	SW6010B	JTC
***Lead**	**32.7**	0.297		mg/Kg dry	1	12/9/16 9:10	12/12/16 13:02	SW6010B	JTC
Conventional Chemistry Parameters									
***pH**	**7.9**	0.010		pH Units	1	12/13/16 10:30	12/13/16 16:39	SW9045C	LAH
Percent Solids	**84.0**	0.100		%	1	12/13/16 14:00	12/14/16 12:19	ASTM D2974	LAH

Prairie Analytical Systems, Inc. **Date:** 12/21/2016

LABORATORY RESULTS

Client: Hampton, Lenzini and Renwick, Inc.
Project: 16.0805 Alexander Lumber Co Oswego **Lab Order:** 16L0223
Client Sample ID: B-02 5.1 **Lab ID:** 16L0223-02
Collection Date: 12/7/16 9:30 **Matrix:** Solid

Analyses	Result	Limit	Qual	Units	DF	Date Prepared	Date Analyzed	Method	Analyst
Volatile Organic Compounds by GC-MS									
*Acetone	U	0.0957		mg/Kg dry	1	12/14/16 10:26	12/14/16 19:41	SW8260B Re	JLS
*Benzene	U	0.00479		mg/Kg dry	1	12/14/16 10:26	12/14/16 19:41	SW8260B Re	JLS
*Bromodichloromethane	U	0.00479		mg/Kg dry	1	12/14/16 10:26	12/14/16 19:41	SW8260B Re	JLS
*Bromoform	U	0.00479		mg/Kg dry	1	12/14/16 10:26	12/14/16 19:41	SW8260B Re	JLS
*Bromomethane	U	0.00957		mg/Kg dry	1	12/14/16 10:26	12/14/16 19:41	SW8260B Re	JLS
*2-Butanone	U	0.00957		mg/Kg dry	1	12/14/16 10:26	12/14/16 19:41	SW8260B Re	JLS
*Carbon disulfide	U	0.00957		mg/Kg dry	1	12/14/16 10:26	12/14/16 19:41	SW8260B Re	JLS
*Carbon tetrachloride	U	0.00479		mg/Kg dry	1	12/14/16 10:26	12/14/16 19:41	SW8260B Re	JLS
*Chlorobenzene	U	0.00479		mg/Kg dry	1	12/14/16 10:26	12/14/16 19:41	SW8260B Re	JLS
*Chloroethane	U	0.00957		mg/Kg dry	1	12/14/16 10:26	12/14/16 19:41	SW8260B Re	JLS
*Chloroform	U	0.00479		mg/Kg dry	1	12/14/16 10:26	12/14/16 19:41	SW8260B Re	JLS
*Chloromethane	U	0.00957		mg/Kg dry	1	12/14/16 10:26	12/14/16 19:41	SW8260B Re	JLS
*Dibromochloromethane	U	0.00479		mg/Kg dry	1	12/14/16 10:26	12/14/16 19:41	SW8260B Re	JLS
*1,1-Dichloroethane	U	0.00479		mg/Kg dry	1	12/14/16 10:26	12/14/16 19:41	SW8260B Re	JLS
*1,2-Dichloroethane	U	0.00479		mg/Kg dry	1	12/14/16 10:26	12/14/16 19:41	SW8260B Re	JLS
*1,1-Dichloroethene	U	0.00479		mg/Kg dry	1	12/14/16 10:26	12/14/16 19:41	SW8260B Re	JLS
*cis-1,2-Dichloroethene	U	0.00479		mg/Kg dry	1	12/14/16 10:26	12/14/16 19:41	SW8260B Re	JLS
trans-1,2-Dichloroethene	U	0.00479		mg/Kg dry	1	12/14/16 10:26	12/14/16 19:41	SW8260B Re	JLS
*1,2-Dichloropropane	U	0.00479		mg/Kg dry	1	12/14/16 10:26	12/14/16 19:41	SW8260B Re	JLS
*cis-1,3-Dichloropropene	U	0.00287		mg/Kg dry	1	12/14/16 10:26	12/14/16 19:41	SW8260B Re	JLS
*trans-1,3-Dichloropropene	U	0.00287		mg/Kg dry	1	12/14/16 10:26	12/14/16 19:41	SW8260B Re	JLS
*Ethylbenzene	U	0.00479		mg/Kg dry	1	12/14/16 10:26	12/14/16 19:41	SW8260B Re	JLS
*2-Hexanone	U	0.00479		mg/Kg dry	1	12/14/16 10:26	12/14/16 19:41	SW8260B Re	JLS
*Methyl tert-butyl ether	U	0.00479		mg/Kg dry	1	12/14/16 10:26	12/14/16 19:41	SW8260B Re	JLS
*4-Methyl-2-pentanone	U	0.00479		mg/Kg dry	1	12/14/16 10:26	12/14/16 19:41	SW8260B Re	JLS
*Methylene chloride	U	0.00479		mg/Kg dry	1	12/14/16 10:26	12/14/16 19:41	SW8260B Re	JLS
*Styrene	U	0.00479		mg/Kg dry	1	12/14/16 10:26	12/14/16 19:41	SW8260B Re	JLS
*1,1,2,2-Tetrachloroethane	U	0.00191		mg/Kg dry	1	12/14/16 10:26	12/14/16 19:41	SW8260B Re	JLS
*Tetrachloroethene	U	0.00479		mg/Kg dry	1	12/14/16 10:26	12/14/16 19:41	SW8260B Re	JLS
*Toluene	U	0.00479		mg/Kg dry	1	12/14/16 10:26	12/14/16 19:41	SW8260B Re	JLS
*1,1,1-Trichloroethane	U	0.00479		mg/Kg dry	1	12/14/16 10:26	12/14/16 19:41	SW8260B Re	JLS
*1,1,2-Trichloroethane	U	0.00479		mg/Kg dry	1	12/14/16 10:26	12/14/16 19:41	SW8260B Re	JLS
Trichloroethene	U	0.00479		mg/Kg dry	1	12/14/16 10:26	12/14/16 19:41	SW8260B Re	JLS
*Vinyl chloride	U	0.00479		mg/Kg dry	1	12/14/16 10:26	12/14/16 19:41	SW8260B Re	JLS
*Xylenes (total)	U	0.0144		mg/Kg dry	1	12/14/16 10:26	12/14/16 19:41	SW8260B Re	JLS
Surrogate: 4-Bromofluorobenzene		*75 %*		*75-120*		12/14/16 10:26	12/14/16 19:41	SW8260B Re	JLS
Surrogate: 1,2-Dichloroethane-d4		*75 %*		*75-119*		12/14/16 10:26	12/14/16 19:41	SW8260B Re	JLS
Surrogate: Toluene-d8		*112 %*		*78-114*		12/14/16 10:26	12/14/16 19:41	SW8260B Re	JLS
Semi-Volatile Organic Compounds by GC-MS									
*Acenaphthene	U	0.369		mg/Kg dry	1	12/9/16 12:34	12/14/16 1:45	SW8270C	JKA
*Acenaphthylene	U	0.369		mg/Kg dry	1	12/9/16 12:34	12/14/16 1:45	SW8270C	JKA
*Anthracene	U	0.369		mg/Kg dry	1	12/9/16 12:34	12/14/16 1:45	SW8270C	JKA
*Benzo(a)anthracene	U	0.369		mg/Kg dry	1	12/9/16 12:34	12/14/16 1:45	SW8270C	JKA
*Benzo(b)fluoranthene	U	0.369		mg/Kg dry	1	12/9/16 12:34	12/14/16 1:45	SW8270C	JKA
*Benzo(k)fluoranthene	U	0.369		mg/Kg dry	1	12/9/16 12:34	12/14/16 1:45	SW8270C	JKA
*Benzo(g,h,i)perylene	U	0.369		mg/Kg dry	1	12/9/16 12:34	12/14/16 1:45	SW8270C	JKA
***Benzo(a)pyrene**	**0.115**	0.0664		mg/Kg dry	1	12/9/16 12:34	12/14/16 1:45	SW8270C	JKA
*Bis(2-chloroethoxy)methane	U	0.369		mg/Kg dry	1	12/9/16 12:34	12/14/16 1:45	SW8270C	JKA

Prairie Analytical Systems, Inc. **Date:** 12/21/2016

LABORATORY RESULTS

Client: Hampton, Lenzini and Renwick, Inc.
Project: 16.0805 Alexander Lumber Co Oswego **Lab Order:** 16L0223
Client Sample ID: B-02 5.1 **Lab ID:** 16L0223-02
Collection Date: 12/7/16 9:30 **Matrix:** Solid

Analyses	Result	Limit	Qual	Units	DF	Date Prepared	Date Analyzed	Method	Analyst
*Bis(2-chloroethyl)ether	U	0.369		mg/Kg dry	1	12/9/16 12:34	12/14/16 1:45	SW8270C	JKA
*Bis(2-chloroisopropyl)ether	U	0.369		mg/Kg dry	1	12/9/16 12:34	12/14/16 1:45	SW8270C	JKA
*Bis(2-ethylhexyl)phthalate	U	0.369		mg/Kg dry	1	12/9/16 12:34	12/14/16 1:45	SW8270C	JKA
*4-Bromophenyl phenyl ether	U	0.369		mg/Kg dry	1	12/9/16 12:34	12/14/16 1:45	SW8270C	JKA
*Butyl benzyl phthalate	U	0.369		mg/Kg dry	1	12/9/16 12:34	12/14/16 1:45	SW8270C	JKA
*Carbazole	U	0.369		mg/Kg dry	1	12/9/16 12:34	12/14/16 1:45	SW8270C	JKA
*4-Chloro-3-methylphenol	U	0.737		mg/Kg dry	1	12/9/16 12:34	12/14/16 1:45	SW8270C	JKA
*4-Chloroaniline	U	0.581		mg/Kg dry	1	12/9/16 12:34	12/14/16 1:45	SW8270C	JKA
*2-Chloronaphthalene	U	0.369		mg/Kg dry	1	12/9/16 12:34	12/14/16 1:45	SW8270C	JKA
*2-Chlorophenol	U	0.369		mg/Kg dry	1	12/9/16 12:34	12/14/16 1:45	SW8270C	JKA
*4-Chlorophenyl phenyl ether	U	0.369		mg/Kg dry	1	12/9/16 12:34	12/14/16 1:45	SW8270C	JKA
*Chrysene	U	0.369		mg/Kg dry	1	12/9/16 12:34	12/14/16 1:45	SW8270C	JKA
*Di-n-butyl phthalate	U	0.369		mg/Kg dry	1	12/9/16 12:34	12/14/16 1:45	SW8270C	JKA
*Di-n-octyl phthalate	U	0.369		mg/Kg dry	1	12/9/16 12:34	12/14/16 1:45	SW8270C	JKA
*Dibenz(a,h)anthracene	U	0.0664		mg/Kg dry	1	12/9/16 12:34	12/14/16 1:45	SW8270C	JKA
*Dibenzofuran	U	1.84		mg/Kg dry	1	12/9/16 12:34	12/14/16 1:45	SW8270C	JKA
*1,2-Dichlorobenzene	U	0.369		mg/Kg dry	1	12/9/16 12:34	12/14/16 1:45	SW8270C	JKA
*1,3-Dichlorobenzene	U	0.111		mg/Kg dry	1	12/9/16 12:34	12/14/16 1:45	SW8270C	JKA
*1,4-Dichlorobenzene	U	0.369		mg/Kg dry	1	12/9/16 12:34	12/14/16 1:45	SW8270C	JKA
*3,3'-Dichlorobenzidine	U	0.00553		mg/Kg dry	1	12/9/16 12:34	12/14/16 1:45	SW8270C	JKA
*2,4-Dichlorophenol	U	0.369		mg/Kg dry	1	12/9/16 12:34	12/14/16 1:45	SW8270C	JKA
*Diethyl phthalate	U	0.369		mg/Kg dry	1	12/9/16 12:34	12/14/16 1:45	SW8270C	JKA
*Dimethyl phthalate	U	0.369		mg/Kg dry	1	12/9/16 12:34	12/14/16 1:45	SW8270C	JKA
*2,4-Dimethylphenol	U	0.369		mg/Kg dry	1	12/9/16 12:34	12/14/16 1:45	SW8270C	JKA
*4,6-Dinitro-2-methylphenol	U	0.0251	M	mg/Kg dry	1	12/9/16 12:34	12/14/16 1:45	SW8270C	JKA
*2,4-Dinitrophenol	U	0.111		mg/Kg dry	1	12/9/16 12:34	12/14/16 1:45	SW8270C	JKA
*2,4-Dinitrotoluene	U	0.111		mg/Kg dry	1	12/9/16 12:34	12/14/16 1:45	SW8270C	JKA
*2,6-Dinitrotoluene	U	0.111		mg/Kg dry	1	12/9/16 12:34	12/14/16 1:45	SW8270C	JKA
***Fluoranthene**	**0.666**	0.369		mg/Kg dry	1	12/9/16 12:34	12/14/16 1:45	SW8270C	JKA
*Fluorene	U	0.369		mg/Kg dry	1	12/9/16 12:34	12/14/16 1:45	SW8270C	JKA
*Hexachlorobenzene	U	0.111		mg/Kg dry	1	12/9/16 12:34	12/14/16 1:45	SW8270C	JKA
*Hexachlorobutadiene	U	0.369		mg/Kg dry	1	12/9/16 12:34	12/14/16 1:45	SW8270C	JKA
*Hexachlorocyclopentadiene	U	0.737		mg/Kg dry	1	12/9/16 12:34	12/14/16 1:45	SW8270C	JKA
*Hexachloroethane	U	0.369		mg/Kg dry	1	12/9/16 12:34	12/14/16 1:45	SW8270C	JKA
*Indeno(1,2,3-cd)pyrene	U	0.369		mg/Kg dry	1	12/9/16 12:34	12/14/16 1:45	SW8270C	JKA
*Isophorone	U	0.369		mg/Kg dry	1	12/9/16 12:34	12/14/16 1:45	SW8270C	JKA
*2-Methylnaphthalene	U	0.369		mg/Kg dry	1	12/9/16 12:34	12/14/16 1:45	SW8270C	JKA
*2-Methylphenol	U	0.369		mg/Kg dry	1	12/9/16 12:34	12/14/16 1:45	SW8270C	JKA
3 & 4-Methylphenol	U	0.111		mg/Kg dry	1	12/9/16 12:34	12/14/16 1:45	SW8270C	JKA
*Naphthalene	U	0.369		mg/Kg dry	1	12/9/16 12:34	12/14/16 1:45	SW8270C	JKA
*2-Nitroaniline	U	0.111		mg/Kg dry	1	12/9/16 12:34	12/14/16 1:45	SW8270C	JKA
*3-Nitroaniline	U	0.00553		mg/Kg dry	1	12/9/16 12:34	12/14/16 1:45	SW8270C	JKA
*4-Nitroaniline	U	0.0664		mg/Kg dry	1	12/9/16 12:34	12/14/16 1:45	SW8270C	JKA
*Nitrobenzene	U	0.0664		mg/Kg dry	1	12/9/16 12:34	12/14/16 1:45	SW8270C	JKA
*2-Nitrophenol	U	0.369		mg/Kg dry	1	12/9/16 12:34	12/14/16 1:45	SW8270C	JKA
*4-Nitrophenol	U	1.84		mg/Kg dry	1	12/9/16 12:34	12/14/16 1:45	SW8270C	JKA
*N-Nitroso-di-n-propylamine	U	0.000660	M	mg/Kg dry	1	12/9/16 12:34	12/14/16 1:45	SW8270C	JKA
*N-Nitrosodiphenylamine	U	0.369		mg/Kg dry	1	12/9/16 12:34	12/14/16 1:45	SW8270C	JKA
*Pentachlorophenol	U	0.0111		mg/Kg dry	1	12/9/16 12:34	12/14/16 1:45	SW8270C	JKA
***Phenanthrene**	**0.472**	0.369		mg/Kg dry	1	12/9/16 12:34	12/14/16 1:45	SW8270C	JKA

Prairie Analytical Systems, Inc. **Date:** 12/21/2016

LABORATORY RESULTS

Client: Hampton, Lenzini and Renwick, Inc.
Project: 16.0805 Alexander Lumber Co Oswego **Lab Order:** 16L0223
Client Sample ID: B-02 5.1 **Lab ID:** 16L0223-02
Collection Date: 12/7/16 9:30 **Matrix:** Solid

Analyses	Result	Limit	Qual	Units	DF	Date Prepared	Date Analyzed	Method	Analyst
*Phenol	U	0.369		mg/Kg dry	1	12/9/16 12:34	12/14/16 1:45	SW8270C	JKA
***Pyrene**	**0.596**	0.369		mg/Kg dry	1	12/9/16 12:34	12/14/16 1:45	SW8270C	JKA
*1,2,4-Trichlorobenzene	U	0.369		mg/Kg dry	1	12/9/16 12:34	12/14/16 1:45	SW8270C	JKA
*2,4,5-Trichlorophenol	U	0.369		mg/Kg dry	1	12/9/16 12:34	12/14/16 1:45	SW8270C	JKA
*2,4,6-Trichlorophenol	U	0.111		mg/Kg dry	1	12/9/16 12:34	12/14/16 1:45	SW8270C	JKA
Surrogate: 2-Fluorobiphenyl		*84 %*		*40-120*		12/9/16 12:34	12/14/16 1:45	SW8270C	JKA
Surrogate: 2-Fluorophenol		*63 %*		*20-115*		12/9/16 12:34	12/14/16 1:45	SW8270C	JKA
Surrogate: Nitrobenzene-d5		*115 %*		*45-135*		12/9/16 12:34	12/14/16 1:45	SW8270C	JKA
Surrogate: Phenol-d6		*60 %*		*20-100*		12/9/16 12:34	12/14/16 1:45	SW8270C	JKA
Surrogate: 4-Terphenyl-d14		*73 %*		*60-130*		12/9/16 12:34	12/14/16 1:45	SW8270C	JKA
Surrogate: 2,4,6-Tribromophenol		*48 %*		*30-100*		12/9/16 12:34	12/14/16 1:45	SW8270C	JKA
Polychlorinated Biphenyls by GC-ECD									
*Aroclor 1016	U	0.0364		mg/Kg dry	1	12/12/16 10:33	12/12/16 20:02	SW8082	AJD
*Aroclor 1221	U	0.0364		mg/Kg dry	1	12/12/16 10:33	12/12/16 20:02	SW8082	AJD
Aroclor 1232	U	0.0364		mg/Kg dry	1	12/12/16 10:33	12/12/16 20:02	SW8082	AJD
*Aroclor 1242	U	0.0364		mg/Kg dry	1	12/12/16 10:33	12/12/16 20:02	SW8082	AJD
*Aroclor 1248	U	0.0364		mg/Kg dry	1	12/12/16 10:33	12/12/16 20:02	SW8082	AJD
*Aroclor 1254	U	0.0364		mg/Kg dry	1	12/12/16 10:33	12/12/16 20:02	SW8082	AJD
*Aroclor 1260	U	0.0364		mg/Kg dry	1	12/12/16 10:33	12/12/16 20:02	SW8082	AJD
Surrogate: Decachlorobiphenyl		*44 %*	S	*60-140*		12/12/16 10:33	12/12/16 20:02	SW8082	AJD
Surrogate: Tetrachloro-m-xylene		*81 %*		*60-140*		12/12/16 10:33	12/12/16 20:02	SW8082	AJD
Metals by ICP-MS									
*Mercury	U	0.0822		mg/Kg dry	2	12/9/16 9:10	12/9/16 14:35	SW6020A	CCD
*Selenium	U	0.514		mg/Kg dry	2	12/9/16 9:10	12/9/16 14:35	SW6020A	CCD
*Silver	U	0.514		mg/Kg dry	2	12/9/16 9:10	12/9/16 14:35	SW6020A	CCD
Metals by ICP									
***Arsenic**	**6.45**	0.514		mg/Kg dry	1	12/9/16 9:10	12/12/16 13:48	SW6010B	JTC
***Barium**	**35.3**	0.257		mg/Kg dry	1	12/9/16 9:10	12/12/16 13:48	SW6010B	JTC
***Cadmium**	**0.454**	0.257		mg/Kg dry	1	12/9/16 9:10	12/12/16 13:48	SW6010B	JTC
***Chromium**	**10.0**	0.257		mg/Kg dry	1	12/9/16 9:10	12/12/16 13:48	SW6010B	JTC
***Lead**	**13.2**	0.257		mg/Kg dry	1	12/9/16 9:10	12/12/16 13:48	SW6010B	JTC
Conventional Chemistry Parameters									
***pH**	**8.3**	0.010		pH Units	1	12/13/16 10:30	12/13/16 16:39	SW9045C	LAH
Percent Solids	**90.2**	0.100		%	1	12/13/16 14:00	12/14/16 12:19	ASTM D2974	LAH

Prairie Analytical Systems, Inc. **Date:** 12/21/2016

LABORATORY RESULTS

Client: Hampton, Lenzini and Renwick, Inc.
Project: 16.0805 Alexander Lumber Co Oswego **Lab Order:** 16L0223
Client Sample ID: B-03 5.0 **Lab ID:** 16L0223-03
Collection Date: 12/7/16 11:45 **Matrix:** Solid

Analyses	Result	Limit	Qual	Units	DF	Date Prepared	Date Analyzed	Method	Analyst
Volatile Organic Compounds by GC-MS									
*Acetone	U	0.0911		mg/Kg dry	1	12/14/16 10:26	12/14/16 20:10	SW8260B Re	JLS
*Benzene	U	0.00456		mg/Kg dry	1	12/14/16 10:26	12/14/16 20:10	SW8260B Re	JLS
*Bromodichloromethane	U	0.00456		mg/Kg dry	1	12/14/16 10:26	12/14/16 20:10	SW8260B Re	JLS
*Bromoform	U	0.00456		mg/Kg dry	1	12/14/16 10:26	12/14/16 20:10	SW8260B Re	JLS
*Bromomethane	U	0.00911		mg/Kg dry	1	12/14/16 10:26	12/14/16 20:10	SW8260B Re	JLS
*2-Butanone	U	0.00911		mg/Kg dry	1	12/14/16 10:26	12/14/16 20:10	SW8260B Re	JLS
*Carbon disulfide	U	0.00911		mg/Kg dry	1	12/14/16 10:26	12/14/16 20:10	SW8260B Re	JLS
*Carbon tetrachloride	U	0.00456		mg/Kg dry	1	12/14/16 10:26	12/14/16 20:10	SW8260B Re	JLS
*Chlorobenzene	U	0.00456		mg/Kg dry	1	12/14/16 10:26	12/14/16 20:10	SW8260B Re	JLS
*Chloroethane	U	0.00911		mg/Kg dry	1	12/14/16 10:26	12/14/16 20:10	SW8260B Re	JLS
*Chloroform	U	0.00456		mg/Kg dry	1	12/14/16 10:26	12/14/16 20:10	SW8260B Re	JLS
*Chloromethane	U	0.00911		mg/Kg dry	1	12/14/16 10:26	12/14/16 20:10	SW8260B Re	JLS
*Dibromochloromethane	U	0.00456		mg/Kg dry	1	12/14/16 10:26	12/14/16 20:10	SW8260B Re	JLS
*1,1-Dichloroethane	U	0.00456		mg/Kg dry	1	12/14/16 10:26	12/14/16 20:10	SW8260B Re	JLS
*1,2-Dichloroethane	U	0.00456		mg/Kg dry	1	12/14/16 10:26	12/14/16 20:10	SW8260B Re	JLS
*1,1-Dichloroethene	U	0.00456		mg/Kg dry	1	12/14/16 10:26	12/14/16 20:10	SW8260B Re	JLS
*cis-1,2-Dichloroethene	U	0.00456		mg/Kg dry	1	12/14/16 10:26	12/14/16 20:10	SW8260B Re	JLS
trans-1,2-Dichloroethene	U	0.00456		mg/Kg dry	1	12/14/16 10:26	12/14/16 20:10	SW8260B Re	JLS
*1,2-Dichloropropane	U	0.00456		mg/Kg dry	1	12/14/16 10:26	12/14/16 20:10	SW8260B Re	JLS
*cis-1,3-Dichloropropene	U	0.00273		mg/Kg dry	1	12/14/16 10:26	12/14/16 20:10	SW8260B Re	JLS
*trans-1,3-Dichloropropene	U	0.00273		mg/Kg dry	1	12/14/16 10:26	12/14/16 20:10	SW8260B Re	JLS
*Ethylbenzene	U	0.00456		mg/Kg dry	1	12/14/16 10:26	12/14/16 20:10	SW8260B Re	JLS
*2-Hexanone	U	0.00456		mg/Kg dry	1	12/14/16 10:26	12/14/16 20:10	SW8260B Re	JLS
*Methyl tert-butyl ether	U	0.00456		mg/Kg dry	1	12/14/16 10:26	12/14/16 20:10	SW8260B Re	JLS
*4-Methyl-2-pentanone	U	0.00456		mg/Kg dry	1	12/14/16 10:26	12/14/16 20:10	SW8260B Re	JLS
*Methylene chloride	U	0.00456		mg/Kg dry	1	12/14/16 10:26	12/14/16 20:10	SW8260B Re	JLS
*Styrene	U	0.00456		mg/Kg dry	1	12/14/16 10:26	12/14/16 20:10	SW8260B Re	JLS
*1,1,2,2-Tetrachloroethane	U	0.00182		mg/Kg dry	1	12/14/16 10:26	12/14/16 20:10	SW8260B Re	JLS
*Tetrachloroethene	U	0.00456		mg/Kg dry	1	12/14/16 10:26	12/14/16 20:10	SW8260B Re	JLS
*Toluene	U	0.00456		mg/Kg dry	1	12/14/16 10:26	12/14/16 20:10	SW8260B Re	JLS
*1,1,1-Trichloroethane	U	0.00456		mg/Kg dry	1	12/14/16 10:26	12/14/16 20:10	SW8260B Re	JLS
*1,1,2-Trichloroethane	U	0.00456		mg/Kg dry	1	12/14/16 10:26	12/14/16 20:10	SW8260B Re	JLS
Trichloroethene	U	0.00456		mg/Kg dry	1	12/14/16 10:26	12/14/16 20:10	SW8260B Re	JLS
*Vinyl chloride	U	0.00456		mg/Kg dry	1	12/14/16 10:26	12/14/16 20:10	SW8260B Re	JLS
*Xylenes (total)	U	0.0137		mg/Kg dry	1	12/14/16 10:26	12/14/16 20:10	SW8260B Re	JLS
Surrogate: 4-Bromofluorobenzene		*78 %*		*75-120*		12/14/16 10:26	12/14/16 20:10	SW8260B Re	JLS
Surrogate: 1,2-Dichloroethane-d4		*75 %*		*75-119*		12/14/16 10:26	12/14/16 20:10	SW8260B Re	JLS
Surrogate: Toluene-d8		*108 %*		*78-114*		12/14/16 10:26	12/14/16 20:10	SW8260B Re	JLS
Semi-Volatile Organic Compounds by GC-MS									
*Acenaphthene	U	0.416		mg/Kg dry	1	12/9/16 12:34	12/14/16 2:18	SW8270C	JKA
*Acenaphthylene	U	0.416		mg/Kg dry	1	12/9/16 12:34	12/14/16 2:18	SW8270C	JKA
*Anthracene	U	0.416		mg/Kg dry	1	12/9/16 12:34	12/14/16 2:18	SW8270C	JKA
*Benzo(a)anthracene	U	0.416		mg/Kg dry	1	12/9/16 12:34	12/14/16 2:18	SW8270C	JKA
*Benzo(b)fluoranthene	U	0.416		mg/Kg dry	1	12/9/16 12:34	12/14/16 2:18	SW8270C	JKA
*Benzo(k)fluoranthene	U	0.416		mg/Kg dry	1	12/9/16 12:34	12/14/16 2:18	SW8270C	JKA
*Benzo(g,h,i)perylene	U	0.416		mg/Kg dry	1	12/9/16 12:34	12/14/16 2:18	SW8270C	JKA
*Benzo(a)pyrene	U	0.0750		mg/Kg dry	1	12/9/16 12:34	12/14/16 2:18	SW8270C	JKA
*Bis(2-chloroethoxy)methane	U	0.416		mg/Kg dry	1	12/9/16 12:34	12/14/16 2:18	SW8270C	JKA

Prairie Analytical Systems, Inc. **Date:** 12/21/2016

LABORATORY RESULTS

Client: Hampton, Lenzini and Renwick, Inc.
Project: 16.0805 Alexander Lumber Co Oswego **Lab Order:** 16L0223
Client Sample ID: B-03 5.0 **Lab ID:** 16L0223-03
Collection Date: 12/7/16 11:45 **Matrix:** Solid

Analyses	Result	Limit	Qual	Units	DF	Date Prepared	Date Analyzed	Method	Analyst
*Bis(2-chloroethyl)ether	U	0.416		mg/Kg dry	1	12/9/16 12:34	12/14/16 2:18	SW8270C	JKA
*Bis(2-chloroisopropyl)ether	U	0.416		mg/Kg dry	1	12/9/16 12:34	12/14/16 2:18	SW8270C	JKA
*Bis(2-ethylhexyl)phthalate	U	0.416		mg/Kg dry	1	12/9/16 12:34	12/14/16 2:18	SW8270C	JKA
*4-Bromophenyl phenyl ether	U	0.416		mg/Kg dry	1	12/9/16 12:34	12/14/16 2:18	SW8270C	JKA
*Butyl benzyl phthalate	U	0.416		mg/Kg dry	1	12/9/16 12:34	12/14/16 2:18	SW8270C	JKA
*Carbazole	U	0.416		mg/Kg dry	1	12/9/16 12:34	12/14/16 2:18	SW8270C	JKA
*4-Chloro-3-methylphenol	U	0.833		mg/Kg dry	1	12/9/16 12:34	12/14/16 2:18	SW8270C	JKA
*4-Chloroaniline	U	0.656		mg/Kg dry	1	12/9/16 12:34	12/14/16 2:18	SW8270C	JKA
*2-Chloronaphthalene	U	0.416		mg/Kg dry	1	12/9/16 12:34	12/14/16 2:18	SW8270C	JKA
*2-Chlorophenol	U	0.416		mg/Kg dry	1	12/9/16 12:34	12/14/16 2:18	SW8270C	JKA
*4-Chlorophenyl phenyl ether	U	0.416		mg/Kg dry	1	12/9/16 12:34	12/14/16 2:18	SW8270C	JKA
*Chrysene	U	0.416		mg/Kg dry	1	12/9/16 12:34	12/14/16 2:18	SW8270C	JKA
*Di-n-butyl phthalate	U	0.416		mg/Kg dry	1	12/9/16 12:34	12/14/16 2:18	SW8270C	JKA
*Di-n-octyl phthalate	U	0.416		mg/Kg dry	1	12/9/16 12:34	12/14/16 2:18	SW8270C	JKA
*Dibenz(a,h)anthracene	U	0.0750		mg/Kg dry	1	12/9/16 12:34	12/14/16 2:18	SW8270C	JKA
*Dibenzofuran	U	2.08		mg/Kg dry	1	12/9/16 12:34	12/14/16 2:18	SW8270C	JKA
*1,2-Dichlorobenzene	U	0.416		mg/Kg dry	1	12/9/16 12:34	12/14/16 2:18	SW8270C	JKA
*1,3-Dichlorobenzene	U	0.125		mg/Kg dry	1	12/9/16 12:34	12/14/16 2:18	SW8270C	JKA
*1,4-Dichlorobenzene	U	0.416		mg/Kg dry	1	12/9/16 12:34	12/14/16 2:18	SW8270C	JKA
*3,3'-Dichlorobenzidine	U	0.00625		mg/Kg dry	1	12/9/16 12:34	12/14/16 2:18	SW8270C	JKA
*2,4-Dichlorophenol	U	0.416		mg/Kg dry	1	12/9/16 12:34	12/14/16 2:18	SW8270C	JKA
*Diethyl phthalate	U	0.416		mg/Kg dry	1	12/9/16 12:34	12/14/16 2:18	SW8270C	JKA
*Dimethyl phthalate	U	0.416		mg/Kg dry	1	12/9/16 12:34	12/14/16 2:18	SW8270C	JKA
*2,4-Dimethylphenol	U	0.416		mg/Kg dry	1	12/9/16 12:34	12/14/16 2:18	SW8270C	JKA
*4,6-Dinitro-2-methylphenol	U	0.0283	M	mg/Kg dry	1	12/9/16 12:34	12/14/16 2:18	SW8270C	JKA
*2,4-Dinitrophenol	U	0.125		mg/Kg dry	1	12/9/16 12:34	12/14/16 2:18	SW8270C	JKA
*2,4-Dinitrotoluene	U	0.125		mg/Kg dry	1	12/9/16 12:34	12/14/16 2:18	SW8270C	JKA
*2,6-Dinitrotoluene	U	0.125		mg/Kg dry	1	12/9/16 12:34	12/14/16 2:18	SW8270C	JKA
*Fluoranthene	U	0.416		mg/Kg dry	1	12/9/16 12:34	12/14/16 2:18	SW8270C	JKA
*Fluorene	U	0.416		mg/Kg dry	1	12/9/16 12:34	12/14/16 2:18	SW8270C	JKA
*Hexachlorobenzene	U	0.125		mg/Kg dry	1	12/9/16 12:34	12/14/16 2:18	SW8270C	JKA
*Hexachlorobutadiene	U	0.416		mg/Kg dry	1	12/9/16 12:34	12/14/16 2:18	SW8270C	JKA
*Hexachlorocyclopentadiene	U	0.833		mg/Kg dry	1	12/9/16 12:34	12/14/16 2:18	SW8270C	JKA
*Hexachloroethane	U	0.416		mg/Kg dry	1	12/9/16 12:34	12/14/16 2:18	SW8270C	JKA
*Indeno(1,2,3-cd)pyrene	U	0.416		mg/Kg dry	1	12/9/16 12:34	12/14/16 2:18	SW8270C	JKA
*Isophorone	U	0.416		mg/Kg dry	1	12/9/16 12:34	12/14/16 2:18	SW8270C	JKA
*2-Methylnaphthalene	U	0.416		mg/Kg dry	1	12/9/16 12:34	12/14/16 2:18	SW8270C	JKA
*2-Methylphenol	U	0.416		mg/Kg dry	1	12/9/16 12:34	12/14/16 2:18	SW8270C	JKA
3 & 4-Methylphenol	U	0.125		mg/Kg dry	1	12/9/16 12:34	12/14/16 2:18	SW8270C	JKA
*Naphthalene	U	0.416		mg/Kg dry	1	12/9/16 12:34	12/14/16 2:18	SW8270C	JKA
*2-Nitroaniline	U	0.125		mg/Kg dry	1	12/9/16 12:34	12/14/16 2:18	SW8270C	JKA
*3-Nitroaniline	U	0.00625		mg/Kg dry	1	12/9/16 12:34	12/14/16 2:18	SW8270C	JKA
*4-Nitroaniline	U	0.0750		mg/Kg dry	1	12/9/16 12:34	12/14/16 2:18	SW8270C	JKA
*Nitrobenzene	U	0.0750		mg/Kg dry	1	12/9/16 12:34	12/14/16 2:18	SW8270C	JKA
*2-Nitrophenol	U	0.416		mg/Kg dry	1	12/9/16 12:34	12/14/16 2:18	SW8270C	JKA
*4-Nitrophenol	U	2.08		mg/Kg dry	1	12/9/16 12:34	12/14/16 2:18	SW8270C	JKA
*N-Nitroso-di-n-propylamine	U	0.000746	M	mg/Kg dry	1	12/9/16 12:34	12/14/16 2:18	SW8270C	JKA
*N-Nitrosodiphenylamine	U	0.416		mg/Kg dry	1	12/9/16 12:34	12/14/16 2:18	SW8270C	JKA
*Pentachlorophenol	U	0.0125		mg/Kg dry	1	12/9/16 12:34	12/14/16 2:18	SW8270C	JKA
*Phenanthrene	U	0.416		mg/Kg dry	1	12/9/16 12:34	12/14/16 2:18	SW8270C	JKA

Prairie Analytical Systems, Inc. **Date:** 12/21/2016

LABORATORY RESULTS

Client: Hampton, Lenzini and Renwick, Inc.
Project: 16.0805 Alexander Lumber Co Oswego **Lab Order:** 16L0223
Client Sample ID: B-03 5.0 **Lab ID:** 16L0223-03
Collection Date: 12/7/16 11:45 **Matrix:** Solid

Analyses	Result	Limit	Qual	Units	DF	Date Prepared	Date Analyzed	Method	Analyst
*Phenol	U	0.416		mg/Kg dry	1	12/9/16 12:34	12/14/16 2:18	SW8270C	JKA
*Pyrene	U	0.416		mg/Kg dry	1	12/9/16 12:34	12/14/16 2:18	SW8270C	JKA
*1,2,4-Trichlorobenzene	U	0.416		mg/Kg dry	1	12/9/16 12:34	12/14/16 2:18	SW8270C	JKA
*2,4,5-Trichlorophenol	U	0.416		mg/Kg dry	1	12/9/16 12:34	12/14/16 2:18	SW8270C	JKA
*2,4,6-Trichlorophenol	U	0.125		mg/Kg dry	1	12/9/16 12:34	12/14/16 2:18	SW8270C	JKA
Surrogate: 2-Fluorobiphenyl		*80 %*		*40-120*		12/9/16 12:34	12/14/16 2:18	SW8270C	JKA
Surrogate: 2-Fluorophenol		*55 %*		*20-115*		12/9/16 12:34	12/14/16 2:18	SW8270C	JKA
Surrogate: Nitrobenzene-d5		*104 %*		*45-135*		12/9/16 12:34	12/14/16 2:18	SW8270C	JKA
Surrogate: Phenol-d6		*55 %*		*20-100*		12/9/16 12:34	12/14/16 2:18	SW8270C	JKA
Surrogate: 4-Terphenyl-d14		*73 %*		*60-130*		12/9/16 12:34	12/14/16 2:18	SW8270C	JKA
Surrogate: 2,4,6-Tribromophenol		*51 %*		*30-100*		12/9/16 12:34	12/14/16 2:18	SW8270C	JKA
Polychlorinated Biphenyls by GC-ECD									
*Aroclor 1016	U	0.0416		mg/Kg dry	1	12/12/16 10:33	12/12/16 20:24	SW8082	AJD
*Aroclor 1221	U	0.0416		mg/Kg dry	1	12/12/16 10:33	12/12/16 20:24	SW8082	AJD
Aroclor 1232	U	0.0416		mg/Kg dry	1	12/12/16 10:33	12/12/16 20:24	SW8082	AJD
*Aroclor 1242	U	0.0416		mg/Kg dry	1	12/12/16 10:33	12/12/16 20:24	SW8082	AJD
*Aroclor 1248	U	0.0416		mg/Kg dry	1	12/12/16 10:33	12/12/16 20:24	SW8082	AJD
*Aroclor 1254	U	0.0416		mg/Kg dry	1	12/12/16 10:33	12/12/16 20:24	SW8082	AJD
*Aroclor 1260	U	0.0416		mg/Kg dry	1	12/12/16 10:33	12/12/16 20:24	SW8082	AJD
Surrogate: Decachlorobiphenyl		*54 %*	S	*60-140*		12/12/16 10:33	12/12/16 20:24	SW8082	AJD
Surrogate: Tetrachloro-m-xylene		*81 %*		*60-140*		12/12/16 10:33	12/12/16 20:24	SW8082	AJD
Metals by ICP-MS									
***Mercury**	**0.174**	0.0954		mg/Kg dry	2	12/9/16 9:10	12/9/16 14:43	SW6020A	CCD
*Selenium	U	0.596		mg/Kg dry	2	12/9/16 9:10	12/9/16 14:43	SW6020A	CCD
*Silver	U	0.596		mg/Kg dry	2	12/9/16 9:10	12/9/16 14:43	SW6020A	CCD
TCLP Metals by ICP-MS									
*Mercury	U	0.000600		mg/L	3	12/21/16 9:30	12/21/16 14:25	SW6020A	CCD
Metals by ICP									
***Arsenic**	**8.94**	0.596		mg/Kg dry	1	12/9/16 9:10	12/12/16 13:53	SW6010B	JTC
***Barium**	**118**	0.298		mg/Kg dry	1	12/9/16 9:10	12/12/16 13:53	SW6010B	JTC
***Cadmium**	**1.41**	0.298		mg/Kg dry	1	12/9/16 9:10	12/12/16 13:53	SW6010B	JTC
***Chromium**	**10.9**	0.298		mg/Kg dry	1	12/9/16 9:10	12/12/16 13:53	SW6010B	JTC
***Lead**	**51.2**	0.298		mg/Kg dry	1	12/9/16 9:10	12/12/16 13:53	SW6010B	JTC
Conventional Chemistry Parameters									
***pH**	**7.8**	0.010		pH Units	1	12/13/16 10:30	12/13/16 16:39	SW9045C	LAH
Percent Solids	**80.0**	0.100		%	1	12/13/16 14:00	12/14/16 12:19	ASTM D2974	LAH

Prairie Analytical Systems, Inc. **Date:** 12/21/2016

LABORATORY RESULTS

Client: Hampton, Lenzini and Renwick, Inc.
Project: 16.0805 Alexander Lumber Co Oswego **Lab Order:** 16L0223
Client Sample ID: B-04 3.0 **Lab ID:** 16L0223-04
Collection Date: 12/7/16 9:15 **Matrix:** Solid

Analyses	Result	Limit	Qual	Units	DF	Date Prepared	Date Analyzed	Method	Analyst
Volatile Organic Compounds by GC-MS									
*Acetone	U	0.0704		mg/Kg dry	1	12/14/16 10:26	12/14/16 20:40	SW8260B Re	JLS
*Benzene	U	0.00352		mg/Kg dry	1	12/14/16 10:26	12/14/16 20:40	SW8260B Re	JLS
*Bromodichloromethane	U	0.00352		mg/Kg dry	1	12/14/16 10:26	12/14/16 20:40	SW8260B Re	JLS
*Bromoform	U	0.00352		mg/Kg dry	1	12/14/16 10:26	12/14/16 20:40	SW8260B Re	JLS
*Bromomethane	U	0.00704		mg/Kg dry	1	12/14/16 10:26	12/14/16 20:40	SW8260B Re	JLS
*2-Butanone	U	0.00704		mg/Kg dry	1	12/14/16 10:26	12/14/16 20:40	SW8260B Re	JLS
*Carbon disulfide	U	0.00704		mg/Kg dry	1	12/14/16 10:26	12/14/16 20:40	SW8260B Re	JLS
*Carbon tetrachloride	U	0.00352		mg/Kg dry	1	12/14/16 10:26	12/14/16 20:40	SW8260B Re	JLS
*Chlorobenzene	U	0.00352		mg/Kg dry	1	12/14/16 10:26	12/14/16 20:40	SW8260B Re	JLS
*Chloroethane	U	0.00704		mg/Kg dry	1	12/14/16 10:26	12/14/16 20:40	SW8260B Re	JLS
*Chloroform	U	0.00352		mg/Kg dry	1	12/14/16 10:26	12/14/16 20:40	SW8260B Re	JLS
*Chloromethane	U	0.00704		mg/Kg dry	1	12/14/16 10:26	12/14/16 20:40	SW8260B Re	JLS
*Dibromochloromethane	U	0.00352		mg/Kg dry	1	12/14/16 10:26	12/14/16 20:40	SW8260B Re	JLS
*1,1-Dichloroethane	U	0.00352		mg/Kg dry	1	12/14/16 10:26	12/14/16 20:40	SW8260B Re	JLS
*1,2-Dichloroethane	U	0.00352		mg/Kg dry	1	12/14/16 10:26	12/14/16 20:40	SW8260B Re	JLS
*1,1-Dichloroethene	U	0.00352		mg/Kg dry	1	12/14/16 10:26	12/14/16 20:40	SW8260B Re	JLS
*cis-1,2-Dichloroethene	U	0.00352		mg/Kg dry	1	12/14/16 10:26	12/14/16 20:40	SW8260B Re	JLS
trans-1,2-Dichloroethene	U	0.00352		mg/Kg dry	1	12/14/16 10:26	12/14/16 20:40	SW8260B Re	JLS
*1,2-Dichloropropane	U	0.00352		mg/Kg dry	1	12/14/16 10:26	12/14/16 20:40	SW8260B Re	JLS
*cis-1,3-Dichloropropene	U	0.00211		mg/Kg dry	1	12/14/16 10:26	12/14/16 20:40	SW8260B Re	JLS
*trans-1,3-Dichloropropene	U	0.00211		mg/Kg dry	1	12/14/16 10:26	12/14/16 20:40	SW8260B Re	JLS
*Ethylbenzene	U	0.00352		mg/Kg dry	1	12/14/16 10:26	12/14/16 20:40	SW8260B Re	JLS
*2-Hexanone	U	0.00352		mg/Kg dry	1	12/14/16 10:26	12/14/16 20:40	SW8260B Re	JLS
*Methyl tert-butyl ether	U	0.00352		mg/Kg dry	1	12/14/16 10:26	12/14/16 20:40	SW8260B Re	JLS
*4-Methyl-2-pentanone	U	0.00352		mg/Kg dry	1	12/14/16 10:26	12/14/16 20:40	SW8260B Re	JLS
*Methylene chloride	U	0.00352		mg/Kg dry	1	12/14/16 10:26	12/14/16 20:40	SW8260B Re	JLS
*Styrene	U	0.00352		mg/Kg dry	1	12/14/16 10:26	12/14/16 20:40	SW8260B Re	JLS
*1,1,2,2-Tetrachloroethane	U	0.00141		mg/Kg dry	1	12/14/16 10:26	12/14/16 20:40	SW8260B Re	JLS
*Tetrachloroethene	U	0.00352		mg/Kg dry	1	12/14/16 10:26	12/14/16 20:40	SW8260B Re	JLS
*Toluene	U	0.00352		mg/Kg dry	1	12/14/16 10:26	12/14/16 20:40	SW8260B Re	JLS
*1,1,1-Trichloroethane	U	0.00352		mg/Kg dry	1	12/14/16 10:26	12/14/16 20:40	SW8260B Re	JLS
*1,1,2-Trichloroethane	U	0.00352		mg/Kg dry	1	12/14/16 10:26	12/14/16 20:40	SW8260B Re	JLS
Trichloroethene	U	0.00352		mg/Kg dry	1	12/14/16 10:26	12/14/16 20:40	SW8260B Re	JLS
*Vinyl chloride	U	0.00352		mg/Kg dry	1	12/14/16 10:26	12/14/16 20:40	SW8260B Re	JLS
*Xylenes (total)	U	0.0106		mg/Kg dry	1	12/14/16 10:26	12/14/16 20:40	SW8260B Re	JLS
Surrogate: 4-Bromofluorobenzene		*93 %*		*75-120*		12/15/16 13:47	12/15/16 21:58	SW8260B Re	AJD
Surrogate: 4-Bromofluorobenzene		*77 %*		*75-120*		12/14/16 10:26	12/14/16 20:40	SW8260B Re	JLS
Surrogate: 1,2-Dichloroethane-d4		*77 %*		*75-119*		12/15/16 13:47	12/15/16 21:58	SW8260B Re	AJD
Surrogate: 1,2-Dichloroethane-d4		*73 %*	S	*75-119*		12/14/16 10:26	12/14/16 20:40	SW8260B Re	JLS
Surrogate: Toluene-d8		*106 %*		*78-114*		12/14/16 10:26	12/14/16 20:40	SW8260B Re	JLS
Surrogate: Toluene-d8		*98 %*		*78-114*		12/15/16 13:47	12/15/16 21:58	SW8260B Re	AJD
Semi-Volatile Organic Compounds by GC-MS									
*Acenaphthene	U	0.356		mg/Kg dry	1	12/9/16 12:34	12/14/16 2:51	SW8270C	JKA
*Acenaphthylene	U	0.356		mg/Kg dry	1	12/9/16 12:34	12/14/16 2:51	SW8270C	JKA
*Anthracene	U	0.356		mg/Kg dry	1	12/9/16 12:34	12/14/16 2:51	SW8270C	JKA
*Benzo(a)anthracene	U	0.356		mg/Kg dry	1	12/9/16 12:34	12/14/16 2:51	SW8270C	JKA
*Benzo(b)fluoranthene	U	0.356		mg/Kg dry	1	12/9/16 12:34	12/14/16 2:51	SW8270C	JKA
*Benzo(k)fluoranthene	U	0.356		mg/Kg dry	1	12/9/16 12:34	12/14/16 2:51	SW8270C	JKA

Prairie Analytical Systems, Inc. **Date:** 12/21/2016

LABORATORY RESULTS

Client: Hampton, Lenzini and Renwick, Inc.
Project: 16.0805 Alexander Lumber Co Oswego **Lab Order:** 16L0223
Client Sample ID: B-04 3.0 **Lab ID:** 16L0223-04
Collection Date: 12/7/16 9:15 **Matrix:** Solid

Analyses	Result	Limit	Qual	Units	DF	Date Prepared	Date Analyzed	Method	Analyst
*Benzo(g,h,i)perylene	U	0.356		mg/Kg dry	1	12/9/16 12:34	12/14/16 2:51	SW8270C	JKA
*Benzo(a)pyrene	U	0.0641		mg/Kg dry	1	12/9/16 12:34	12/14/16 2:51	SW8270C	JKA
*Bis(2-chloroethoxy)methane	U	0.356		mg/Kg dry	1	12/9/16 12:34	12/14/16 2:51	SW8270C	JKA
*Bis(2-chloroethyl)ether	U	0.356		mg/Kg dry	1	12/9/16 12:34	12/14/16 2:51	SW8270C	JKA
*Bis(2-chloroisopropyl)ether	U	0.356		mg/Kg dry	1	12/9/16 12:34	12/14/16 2:51	SW8270C	JKA
*Bis(2-ethylhexyl)phthalate	U	0.356		mg/Kg dry	1	12/9/16 12:34	12/14/16 2:51	SW8270C	JKA
*4-Bromophenyl phenyl ether	U	0.356		mg/Kg dry	1	12/9/16 12:34	12/14/16 2:51	SW8270C	JKA
*Butyl benzyl phthalate	U	0.356		mg/Kg dry	1	12/9/16 12:34	12/14/16 2:51	SW8270C	JKA
*Carbazole	U	0.356		mg/Kg dry	1	12/9/16 12:34	12/14/16 2:51	SW8270C	JKA
*4-Chloro-3-methylphenol	U	0.712		mg/Kg dry	1	12/9/16 12:34	12/14/16 2:51	SW8270C	JKA
*4-Chloroaniline	U	0.561		mg/Kg dry	1	12/9/16 12:34	12/14/16 2:51	SW8270C	JKA
*2-Chloronaphthalene	U	0.356		mg/Kg dry	1	12/9/16 12:34	12/14/16 2:51	SW8270C	JKA
*2-Chlorophenol	U	0.356		mg/Kg dry	1	12/9/16 12:34	12/14/16 2:51	SW8270C	JKA
*4-Chlorophenyl phenyl ether	U	0.356		mg/Kg dry	1	12/9/16 12:34	12/14/16 2:51	SW8270C	JKA
*Chrysene	U	0.356		mg/Kg dry	1	12/9/16 12:34	12/14/16 2:51	SW8270C	JKA
*Di-n-butyl phthalate	U	0.356		mg/Kg dry	1	12/9/16 12:34	12/14/16 2:51	SW8270C	JKA
*Di-n-octyl phthalate	U	0.356		mg/Kg dry	1	12/9/16 12:34	12/14/16 2:51	SW8270C	JKA
*Dibenz(a,h)anthracene	U	0.0641		mg/Kg dry	1	12/9/16 12:34	12/14/16 2:51	SW8270C	JKA
*Dibenzofuran	U	1.78		mg/Kg dry	1	12/9/16 12:34	12/14/16 2:51	SW8270C	JKA
*1,2-Dichlorobenzene	U	0.356		mg/Kg dry	1	12/9/16 12:34	12/14/16 2:51	SW8270C	JKA
*1,3-Dichlorobenzene	U	0.107		mg/Kg dry	1	12/9/16 12:34	12/14/16 2:51	SW8270C	JKA
*1,4-Dichlorobenzene	U	0.356		mg/Kg dry	1	12/9/16 12:34	12/14/16 2:51	SW8270C	JKA
*3,3'-Dichlorobenzidine	U	0.00534		mg/Kg dry	1	12/9/16 12:34	12/14/16 2:51	SW8270C	JKA
*2,4-Dichlorophenol	U	0.356		mg/Kg dry	1	12/9/16 12:34	12/14/16 2:51	SW8270C	JKA
*Diethyl phthalate	U	0.356		mg/Kg dry	1	12/9/16 12:34	12/14/16 2:51	SW8270C	JKA
*Dimethyl phthalate	U	0.356		mg/Kg dry	1	12/9/16 12:34	12/14/16 2:51	SW8270C	JKA
*2,4-Dimethylphenol	U	0.356		mg/Kg dry	1	12/9/16 12:34	12/14/16 2:51	SW8270C	JKA
*4,6-Dinitro-2-methylphenol	U	0.0242	M	mg/Kg dry	1	12/9/16 12:34	12/14/16 2:51	SW8270C	JKA
*2,4-Dinitrophenol	U	0.107		mg/Kg dry	1	12/9/16 12:34	12/14/16 2:51	SW8270C	JKA
*2,4-Dinitrotoluene	U	0.107		mg/Kg dry	1	12/9/16 12:34	12/14/16 2:51	SW8270C	JKA
*2,6-Dinitrotoluene	U	0.107		mg/Kg dry	1	12/9/16 12:34	12/14/16 2:51	SW8270C	JKA
*Fluoranthene	U	0.356		mg/Kg dry	1	12/9/16 12:34	12/14/16 2:51	SW8270C	JKA
*Fluorene	U	0.356		mg/Kg dry	1	12/9/16 12:34	12/14/16 2:51	SW8270C	JKA
*Hexachlorobenzene	U	0.107		mg/Kg dry	1	12/9/16 12:34	12/14/16 2:51	SW8270C	JKA
*Hexachlorobutadiene	U	0.356		mg/Kg dry	1	12/9/16 12:34	12/14/16 2:51	SW8270C	JKA
*Hexachlorocyclopentadiene	U	0.712		mg/Kg dry	1	12/9/16 12:34	12/14/16 2:51	SW8270C	JKA
*Hexachloroethane	U	0.356		mg/Kg dry	1	12/9/16 12:34	12/14/16 2:51	SW8270C	JKA
*Indeno(1,2,3-cd)pyrene	U	0.356		mg/Kg dry	1	12/9/16 12:34	12/14/16 2:51	SW8270C	JKA
*Isophorone	U	0.356		mg/Kg dry	1	12/9/16 12:34	12/14/16 2:51	SW8270C	JKA
*2-Methylnaphthalene	U	0.356		mg/Kg dry	1	12/9/16 12:34	12/14/16 2:51	SW8270C	JKA
*2-Methylphenol	U	0.356		mg/Kg dry	1	12/9/16 12:34	12/14/16 2:51	SW8270C	JKA
3 & 4-Methylphenol	U	0.107		mg/Kg dry	1	12/9/16 12:34	12/14/16 2:51	SW8270C	JKA
*Naphthalene	U	0.356		mg/Kg dry	1	12/9/16 12:34	12/14/16 2:51	SW8270C	JKA
*2-Nitroaniline	U	0.107		mg/Kg dry	1	12/9/16 12:34	12/14/16 2:51	SW8270C	JKA
*3-Nitroaniline	U	0.00534		mg/Kg dry	1	12/9/16 12:34	12/14/16 2:51	SW8270C	JKA
*4-Nitroaniline	U	0.0641		mg/Kg dry	1	12/9/16 12:34	12/14/16 2:51	SW8270C	JKA
*Nitrobenzene	U	0.0641		mg/Kg dry	1	12/9/16 12:34	12/14/16 2:51	SW8270C	JKA
*2-Nitrophenol	U	0.356		mg/Kg dry	1	12/9/16 12:34	12/14/16 2:51	SW8270C	JKA
*4-Nitrophenol	U	1.78		mg/Kg dry	1	12/9/16 12:34	12/14/16 2:51	SW8270C	JKA
*N-Nitroso-di-n-propylamine	U	0.000637	M	mg/Kg dry	1	12/9/16 12:34	12/14/16 2:51	SW8270C	JKA

Prairie Analytical Systems, Inc. **Date:** 12/21/2016

LABORATORY RESULTS

Client: Hampton, Lenzini and Renwick, Inc.
Project: 16.0805 Alexander Lumber Co Oswego **Lab Order:** 16L0223
Client Sample ID: B-04 3.0 **Lab ID:** 16L0223-04
Collection Date: 12/7/16 9:15 **Matrix:** Solid

Analyses	Result	Limit	Qual	Units	DF	Date Prepared	Date Analyzed	Method	Analyst
*N-Nitrosodiphenylamine	U	0.356		mg/Kg dry	1	12/9/16 12:34	12/14/16 2:51	SW8270C	JKA
*Pentachlorophenol	U	0.0107		mg/Kg dry	1	12/9/16 12:34	12/14/16 2:51	SW8270C	JKA
*Phenanthrene	U	0.356		mg/Kg dry	1	12/9/16 12:34	12/14/16 2:51	SW8270C	JKA
*Phenol	U	0.356		mg/Kg dry	1	12/9/16 12:34	12/14/16 2:51	SW8270C	JKA
*Pyrene	U	0.356		mg/Kg dry	1	12/9/16 12:34	12/14/16 2:51	SW8270C	JKA
*1,2,4-Trichlorobenzene	U	0.356		mg/Kg dry	1	12/9/16 12:34	12/14/16 2:51	SW8270C	JKA
*2,4,5-Trichlorophenol	U	0.356		mg/Kg dry	1	12/9/16 12:34	12/14/16 2:51	SW8270C	JKA
*2,4,6-Trichlorophenol	U	0.107		mg/Kg dry	1	12/9/16 12:34	12/14/16 2:51	SW8270C	JKA
Surrogate: 2-Fluorobiphenyl		*83 %*		*40-120*		12/9/16 12:34	12/14/16 2:51	SW8270C	JKA
Surrogate: 2-Fluorophenol		*55 %*		*20-115*		12/9/16 12:34	12/14/16 2:51	SW8270C	JKA
Surrogate: Nitrobenzene-d5		*119 %*		*45-135*		12/9/16 12:34	12/14/16 2:51	SW8270C	JKA
Surrogate: Phenol-d6		*56 %*		*20-100*		12/9/16 12:34	12/14/16 2:51	SW8270C	JKA
Surrogate: 4-Terphenyl-d14		*87 %*		*60-130*		12/9/16 12:34	12/14/16 2:51	SW8270C	JKA
Surrogate: 2,4,6-Tribromophenol		*54 %*		*30-100*		12/9/16 12:34	12/14/16 2:51	SW8270C	JKA
Polychlorinated Biphenyls by GC-ECD									
*Aroclor 1016	U	0.0360		mg/Kg dry	1	12/12/16 10:33	12/12/16 20:46	SW8082	AJD
*Aroclor 1221	U	0.0360		mg/Kg dry	1	12/12/16 10:33	12/12/16 20:46	SW8082	AJD
Aroclor 1232	U	0.0360		mg/Kg dry	1	12/12/16 10:33	12/12/16 20:46	SW8082	AJD
*Aroclor 1242	U	0.0360		mg/Kg dry	1	12/12/16 10:33	12/12/16 20:46	SW8082	AJD
*Aroclor 1248	U	0.0360		mg/Kg dry	1	12/12/16 10:33	12/12/16 20:46	SW8082	AJD
*Aroclor 1254	U	0.0360		mg/Kg dry	1	12/12/16 10:33	12/12/16 20:46	SW8082	AJD
*Aroclor 1260	U	0.0360		mg/Kg dry	1	12/12/16 10:33	12/12/16 20:46	SW8082	AJD
Surrogate: Decachlorobiphenyl		*47 %*	S	*60-140*		12/12/16 10:33	12/12/16 20:46	SW8082	AJD
Surrogate: Tetrachloro-m-xylene		*68 %*		*60-140*		12/12/16 10:33	12/12/16 20:46	SW8082	AJD
Metals by ICP-MS									
*Mercury	U	0.0819		mg/Kg dry	2	12/9/16 9:10	12/9/16 14:51	SW6020A	CCD
*Selenium	U	0.512		mg/Kg dry	2	12/9/16 9:10	12/9/16 14:51	SW6020A	CCD
*Silver	U	0.512		mg/Kg dry	2	12/9/16 9:10	12/9/16 14:51	SW6020A	CCD
Metals by ICP									
***Arsenic**	**6.50**	0.512		mg/Kg dry	1	12/9/16 9:10	12/12/16 13:59	SW6010B	JTC
***Barium**	**73.2**	0.256		mg/Kg dry	1	12/9/16 9:10	12/12/16 13:59	SW6010B	JTC
***Cadmium**	**0.417**	0.256		mg/Kg dry	1	12/9/16 9:10	12/12/16 13:59	SW6010B	JTC
***Chromium**	**15.3**	0.256		mg/Kg dry	1	12/9/16 9:10	12/12/16 13:59	SW6010B	JTC
***Lead**	**8.96**	0.256		mg/Kg dry	1	12/9/16 9:10	12/12/16 13:59	SW6010B	JTC
Conventional Chemistry Parameters									
***pH**	**8.1**	0.010		pH Units	1	12/13/16 10:30	12/13/16 16:39	SW9045C	LAH
Percent Solids	**91.7**	0.100		%	1	12/13/16 14:00	12/14/16 12:19	ASTM D2974	LAH

Prairie Analytical Systems, Inc. **Date:** 12/21/2016

LABORATORY RESULTS

Client: Hampton, Lenzini and Renwick, Inc.
Project: 16.0805 Alexander Lumber Co Oswego **Lab Order:** 16L0223
Client Sample ID: B-05 6.0 **Lab ID:** 16L0223-05
Collection Date: 12/7/16 8:45 **Matrix:** Solid

Analyses	Result	Limit	Qual	Units	DF	Date Prepared	Date Analyzed	Method	Analyst
Volatile Organic Compounds by GC-MS									
*Acetone	U	0.0514		mg/Kg dry	1	12/15/16 13:47	12/15/16 20:30	SW8260B Re	AJD
*Benzene	U	0.00514		mg/Kg dry	1	12/15/16 13:47	12/15/16 20:30	SW8260B Re	AJD
*Bromodichloromethane	U	0.00514		mg/Kg dry	1	12/15/16 13:47	12/15/16 20:30	SW8260B Re	AJD
*Bromoform	U	0.00514		mg/Kg dry	1	12/15/16 13:47	12/15/16 20:30	SW8260B Re	AJD
*Bromomethane	U	0.0103		mg/Kg dry	1	12/15/16 13:47	12/15/16 20:30	SW8260B Re	AJD
*2-Butanone	U	0.0103		mg/Kg dry	1	12/15/16 13:47	12/15/16 20:30	SW8260B Re	AJD
*Carbon disulfide	U	0.0103		mg/Kg dry	1	12/15/16 13:47	12/15/16 20:30	SW8260B Re	AJD
*Carbon tetrachloride	U	0.00514		mg/Kg dry	1	12/15/16 13:47	12/15/16 20:30	SW8260B Re	AJD
*Chlorobenzene	U	0.00514		mg/Kg dry	1	12/15/16 13:47	12/15/16 20:30	SW8260B Re	AJD
*Chloroethane	U	0.0103		mg/Kg dry	1	12/15/16 13:47	12/15/16 20:30	SW8260B Re	AJD
***Chloroform**	**0.00547**	0.00514		mg/Kg dry	1	12/15/16 13:47	12/15/16 20:30	SW8260B Re	AJD
*Chloromethane	U	0.0103		mg/Kg dry	1	12/15/16 13:47	12/15/16 20:30	SW8260B Re	AJD
*Dibromochloromethane	U	0.00514		mg/Kg dry	1	12/15/16 13:47	12/15/16 20:30	SW8260B Re	AJD
*1,1-Dichloroethane	U	0.00514		mg/Kg dry	1	12/15/16 13:47	12/15/16 20:30	SW8260B Re	AJD
*1,2-Dichloroethane	U	0.00514		mg/Kg dry	1	12/15/16 13:47	12/15/16 20:30	SW8260B Re	AJD
*1,1-Dichloroethene	U	0.00514		mg/Kg dry	1	12/15/16 13:47	12/15/16 20:30	SW8260B Re	AJD
*cis-1,2-Dichloroethene	U	0.00514		mg/Kg dry	1	12/15/16 13:47	12/15/16 20:30	SW8260B Re	AJD
trans-1,2-Dichloroethene	U	0.00514		mg/Kg dry	1	12/15/16 13:47	12/15/16 20:30	SW8260B Re	AJD
*1,2-Dichloropropane	U	0.00514		mg/Kg dry	1	12/15/16 13:47	12/15/16 20:30	SW8260B Re	AJD
*cis-1,3-Dichloropropene	U	0.00308		mg/Kg dry	1	12/15/16 13:47	12/15/16 20:30	SW8260B Re	AJD
*trans-1,3-Dichloropropene	U	0.00308		mg/Kg dry	1	12/15/16 13:47	12/15/16 20:30	SW8260B Re	AJD
*Ethylbenzene	U	0.00514		mg/Kg dry	1	12/15/16 13:47	12/15/16 20:30	SW8260B Re	AJD
*2-Hexanone	U	0.00514		mg/Kg dry	1	12/15/16 13:47	12/15/16 20:30	SW8260B Re	AJD
*Methyl tert-butyl ether	U	0.00514		mg/Kg dry	1	12/15/16 13:47	12/15/16 20:30	SW8260B Re	AJD
*4-Methyl-2-pentanone	U	0.00514		mg/Kg dry	1	12/15/16 13:47	12/15/16 20:30	SW8260B Re	AJD
***Methylene chloride**	**0.00592**	0.00514		mg/Kg dry	1	12/15/16 13:47	12/15/16 20:30	SW8260B Re	AJD
*Styrene	U	0.00514		mg/Kg dry	1	12/15/16 13:47	12/15/16 20:30	SW8260B Re	AJD
*1,1,2,2-Tetrachloroethane	U	0.00206		mg/Kg dry	1	12/15/16 13:47	12/15/16 20:30	SW8260B Re	AJD
*Tetrachloroethene	U	0.00514		mg/Kg dry	1	12/15/16 13:47	12/15/16 20:30	SW8260B Re	AJD
*Toluene	U	0.00514		mg/Kg dry	1	12/15/16 13:47	12/15/16 20:30	SW8260B Re	AJD
*1,1,1-Trichloroethane	U	0.00514		mg/Kg dry	1	12/15/16 13:47	12/15/16 20:30	SW8260B Re	AJD
*1,1,2-Trichloroethane	U	0.00514		mg/Kg dry	1	12/15/16 13:47	12/15/16 20:30	SW8260B Re	AJD
Trichloroethene	U	0.00514		mg/Kg dry	1	12/15/16 13:47	12/15/16 20:30	SW8260B Re	AJD
*Vinyl chloride	U	0.00514		mg/Kg dry	1	12/15/16 13:47	12/15/16 20:30	SW8260B Re	AJD
*Xylenes (total)	U	0.0154		mg/Kg dry	1	12/15/16 13:47	12/15/16 20:30	SW8260B Re	AJD
Surrogate: 4-Bromofluorobenzene		*82 %*		*75-120*		12/15/16 13:47	12/15/16 20:30	SW8260B Re	AJD
Surrogate: 1,2-Dichloroethane-d4		*141 %*	S2	*75-119*		12/15/16 13:47	12/15/16 20:30	SW8260B Re	AJD
Surrogate: Toluene-d8		*104 %*		*78-114*		12/15/16 13:47	12/15/16 20:30	SW8260B Re	AJD
Semi-Volatile Organic Compounds by GC-MS									
*Acenaphthene	U	0.406		mg/Kg dry	1	12/9/16 12:34	12/14/16 3:24	SW8270C	JKA
*Acenaphthylene	U	0.406		mg/Kg dry	1	12/9/16 12:34	12/14/16 3:24	SW8270C	JKA
*Anthracene	U	0.406		mg/Kg dry	1	12/9/16 12:34	12/14/16 3:24	SW8270C	JKA
*Benzo(a)anthracene	U	0.406		mg/Kg dry	1	12/9/16 12:34	12/14/16 3:24	SW8270C	JKA
*Benzo(b)fluoranthene	U	0.406		mg/Kg dry	1	12/9/16 12:34	12/14/16 3:24	SW8270C	JKA
*Benzo(k)fluoranthene	U	0.406		mg/Kg dry	1	12/9/16 12:34	12/14/16 3:24	SW8270C	JKA
*Benzo(g,h,i)perylene	U	0.406		mg/Kg dry	1	12/9/16 12:34	12/14/16 3:24	SW8270C	JKA
*Benzo(a)pyrene	U	0.0731		mg/Kg dry	1	12/9/16 12:34	12/14/16 3:24	SW8270C	JKA
*Bis(2-chloroethoxy)methane	U	0.406		mg/Kg dry	1	12/9/16 12:34	12/14/16 3:24	SW8270C	JKA

Prairie Analytical Systems, Inc. **Date:** 12/21/2016

LABORATORY RESULTS

Client: Hampton, Lenzini and Renwick, Inc.
Project: 16.0805 Alexander Lumber Co Oswego **Lab Order:** 16L0223
Client Sample ID: B-05 6.0 **Lab ID:** 16L0223-05
Collection Date: 12/7/16 8:45 **Matrix:** Solid

Analyses	Result	Limit	Qual	Units	DF	Date Prepared	Date Analyzed	Method	Analyst
*Bis(2-chloroethyl)ether	U	0.406		mg/Kg dry	1	12/9/16 12:34	12/14/16 3:24	SW8270C	JKA
*Bis(2-chloroisopropyl)ether	U	0.406		mg/Kg dry	1	12/9/16 12:34	12/14/16 3:24	SW8270C	JKA
*Bis(2-ethylhexyl)phthalate	U	0.406		mg/Kg dry	1	12/9/16 12:34	12/14/16 3:24	SW8270C	JKA
*4-Bromophenyl phenyl ether	U	0.406		mg/Kg dry	1	12/9/16 12:34	12/14/16 3:24	SW8270C	JKA
*Butyl benzyl phthalate	U	0.406		mg/Kg dry	1	12/9/16 12:34	12/14/16 3:24	SW8270C	JKA
*Carbazole	U	0.406		mg/Kg dry	1	12/9/16 12:34	12/14/16 3:24	SW8270C	JKA
*4-Chloro-3-methylphenol	U	0.812		mg/Kg dry	1	12/9/16 12:34	12/14/16 3:24	SW8270C	JKA
*4-Chloroaniline	U	0.640		mg/Kg dry	1	12/9/16 12:34	12/14/16 3:24	SW8270C	JKA
*2-Chloronaphthalene	U	0.406		mg/Kg dry	1	12/9/16 12:34	12/14/16 3:24	SW8270C	JKA
*2-Chlorophenol	U	0.406		mg/Kg dry	1	12/9/16 12:34	12/14/16 3:24	SW8270C	JKA
*4-Chlorophenyl phenyl ether	U	0.406		mg/Kg dry	1	12/9/16 12:34	12/14/16 3:24	SW8270C	JKA
*Chrysene	U	0.406		mg/Kg dry	1	12/9/16 12:34	12/14/16 3:24	SW8270C	JKA
*Di-n-butyl phthalate	U	0.406		mg/Kg dry	1	12/9/16 12:34	12/14/16 3:24	SW8270C	JKA
*Di-n-octyl phthalate	U	0.406		mg/Kg dry	1	12/9/16 12:34	12/14/16 3:24	SW8270C	JKA
*Dibenz(a,h)anthracene	U	0.0731		mg/Kg dry	1	12/9/16 12:34	12/14/16 3:24	SW8270C	JKA
*Dibenzofuran	U	2.03		mg/Kg dry	1	12/9/16 12:34	12/14/16 3:24	SW8270C	JKA
*1,2-Dichlorobenzene	U	0.406		mg/Kg dry	1	12/9/16 12:34	12/14/16 3:24	SW8270C	JKA
*1,3-Dichlorobenzene	U	0.122		mg/Kg dry	1	12/9/16 12:34	12/14/16 3:24	SW8270C	JKA
*1,4-Dichlorobenzene	U	0.406		mg/Kg dry	1	12/9/16 12:34	12/14/16 3:24	SW8270C	JKA
*3,3'-Dichlorobenzidine	U	0.00609		mg/Kg dry	1	12/9/16 12:34	12/14/16 3:24	SW8270C	JKA
*2,4-Dichlorophenol	U	0.406		mg/Kg dry	1	12/9/16 12:34	12/14/16 3:24	SW8270C	JKA
*Diethyl phthalate	U	0.406		mg/Kg dry	1	12/9/16 12:34	12/14/16 3:24	SW8270C	JKA
*Dimethyl phthalate	U	0.406		mg/Kg dry	1	12/9/16 12:34	12/14/16 3:24	SW8270C	JKA
*2,4-Dimethylphenol	U	0.406		mg/Kg dry	1	12/9/16 12:34	12/14/16 3:24	SW8270C	JKA
*4,6-Dinitro-2-methylphenol	U	0.0276	M	mg/Kg dry	1	12/9/16 12:34	12/14/16 3:24	SW8270C	JKA
*2,4-Dinitrophenol	U	0.122		mg/Kg dry	1	12/9/16 12:34	12/14/16 3:24	SW8270C	JKA
*2,4-Dinitrotoluene	U	0.122		mg/Kg dry	1	12/9/16 12:34	12/14/16 3:24	SW8270C	JKA
*2,6-Dinitrotoluene	U	0.122		mg/Kg dry	1	12/9/16 12:34	12/14/16 3:24	SW8270C	JKA
*Fluoranthene	U	0.406		mg/Kg dry	1	12/9/16 12:34	12/14/16 3:24	SW8270C	JKA
*Fluorene	U	0.406		mg/Kg dry	1	12/9/16 12:34	12/14/16 3:24	SW8270C	JKA
*Hexachlorobenzene	U	0.122		mg/Kg dry	1	12/9/16 12:34	12/14/16 3:24	SW8270C	JKA
*Hexachlorobutadiene	U	0.406		mg/Kg dry	1	12/9/16 12:34	12/14/16 3:24	SW8270C	JKA
*Hexachlorocyclopentadiene	U	0.812		mg/Kg dry	1	12/9/16 12:34	12/14/16 3:24	SW8270C	JKA
*Hexachloroethane	U	0.406		mg/Kg dry	1	12/9/16 12:34	12/14/16 3:24	SW8270C	JKA
*Indeno(1,2,3-cd)pyrene	U	0.406		mg/Kg dry	1	12/9/16 12:34	12/14/16 3:24	SW8270C	JKA
*Isophorone	U	0.406		mg/Kg dry	1	12/9/16 12:34	12/14/16 3:24	SW8270C	JKA
*2-Methylnaphthalene	U	0.406		mg/Kg dry	1	12/9/16 12:34	12/14/16 3:24	SW8270C	JKA
*2-Methylphenol	U	0.406		mg/Kg dry	1	12/9/16 12:34	12/14/16 3:24	SW8270C	JKA
3 & 4-Methylphenol	U	0.122		mg/Kg dry	1	12/9/16 12:34	12/14/16 3:24	SW8270C	JKA
*Naphthalene	U	0.406		mg/Kg dry	1	12/9/16 12:34	12/14/16 3:24	SW8270C	JKA
*2-Nitroaniline	U	0.122		mg/Kg dry	1	12/9/16 12:34	12/14/16 3:24	SW8270C	JKA
*3-Nitroaniline	U	0.00609		mg/Kg dry	1	12/9/16 12:34	12/14/16 3:24	SW8270C	JKA
*4-Nitroaniline	U	0.0731		mg/Kg dry	1	12/9/16 12:34	12/14/16 3:24	SW8270C	JKA
*Nitrobenzene	U	0.0731		mg/Kg dry	1	12/9/16 12:34	12/14/16 3:24	SW8270C	JKA
*2-Nitrophenol	U	0.406		mg/Kg dry	1	12/9/16 12:34	12/14/16 3:24	SW8270C	JKA
*4-Nitrophenol	U	2.03		mg/Kg dry	1	12/9/16 12:34	12/14/16 3:24	SW8270C	JKA
*N-Nitroso-di-n-propylamine	U	0.000727	M	mg/Kg dry	1	12/9/16 12:34	12/14/16 3:24	SW8270C	JKA
*N-Nitrosodiphenylamine	U	0.406		mg/Kg dry	1	12/9/16 12:34	12/14/16 3:24	SW8270C	JKA
*Pentachlorophenol	U	0.0122		mg/Kg dry	1	12/9/16 12:34	12/14/16 3:24	SW8270C	JKA
*Phenanthrene	U	0.406		mg/Kg dry	1	12/9/16 12:34	12/14/16 3:24	SW8270C	JKA

Prairie Analytical Systems, Inc. **Date:** 12/21/2016

LABORATORY RESULTS

Client: Hampton, Lenzini and Renwick, Inc.
Project: 16.0805 Alexander Lumber Co Oswego **Lab Order:** 16L0223
Client Sample ID: B-05 6.0 **Lab ID:** 16L0223-05
Collection Date: 12/7/16 8:45 **Matrix:** Solid

Analyses	Result	Limit	Qual	Units	DF	Date Prepared	Date Analyzed	Method	Analyst
*Phenol	U	0.406		mg/Kg dry	1	12/9/16 12:34	12/14/16 3:24	SW8270C	JKA
*Pyrene	U	0.406		mg/Kg dry	1	12/9/16 12:34	12/14/16 3:24	SW8270C	JKA
*1,2,4-Trichlorobenzene	U	0.406		mg/Kg dry	1	12/9/16 12:34	12/14/16 3:24	SW8270C	JKA
*2,4,5-Trichlorophenol	U	0.406		mg/Kg dry	1	12/9/16 12:34	12/14/16 3:24	SW8270C	JKA
*2,4,6-Trichlorophenol	U	0.122		mg/Kg dry	1	12/9/16 12:34	12/14/16 3:24	SW8270C	JKA
Surrogate: 2-Fluorobiphenyl		*83 %*		*40-120*		12/9/16 12:34	12/14/16 3:24	SW8270C	JKA
Surrogate: 2-Fluorophenol		*56 %*		*20-115*		12/9/16 12:34	12/14/16 3:24	SW8270C	JKA
Surrogate: Nitrobenzene-d5		*97 %*		*45-135*		12/9/16 12:34	12/14/16 3:24	SW8270C	JKA
Surrogate: Phenol-d6		*55 %*		*20-100*		12/9/16 12:34	12/14/16 3:24	SW8270C	JKA
Surrogate: 4-Terphenyl-d14		*82 %*		*60-130*		12/9/16 12:34	12/14/16 3:24	SW8270C	JKA
Surrogate: 2,4,6-Tribromophenol		*63 %*		*30-100*		12/9/16 12:34	12/14/16 3:24	SW8270C	JKA
Polychlorinated Biphenyls by GC-ECD									
*Aroclor 1016	U	0.0405		mg/Kg dry	1	12/12/16 10:33	12/12/16 21:07	SW8082	AJD
*Aroclor 1221	U	0.0405		mg/Kg dry	1	12/12/16 10:33	12/12/16 21:07	SW8082	AJD
Aroclor 1232	U	0.0405		mg/Kg dry	1	12/12/16 10:33	12/12/16 21:07	SW8082	AJD
*Aroclor 1242	U	0.0405		mg/Kg dry	1	12/12/16 10:33	12/12/16 21:07	SW8082	AJD
*Aroclor 1248	U	0.0405		mg/Kg dry	1	12/12/16 10:33	12/12/16 21:07	SW8082	AJD
*Aroclor 1254	U	0.0405		mg/Kg dry	1	12/12/16 10:33	12/12/16 21:07	SW8082	AJD
*Aroclor 1260	U	0.0405		mg/Kg dry	1	12/12/16 10:33	12/12/16 21:07	SW8082	AJD
Surrogate: Decachlorobiphenyl		*50 %*	S	*60-140*		12/12/16 10:33	12/12/16 21:07	SW8082	AJD
Surrogate: Tetrachloro-m-xylene		*65 %*		*60-140*		12/12/16 10:33	12/12/16 21:07	SW8082	AJD
Metals by ICP-MS									
*Mercury	U	0.0937		mg/Kg dry	2	12/9/16 9:10	12/9/16 14:59	SW6020A	CCD
*Selenium	U	0.586		mg/Kg dry	2	12/9/16 9:10	12/9/16 14:59	SW6020A	CCD
*Silver	U	0.586		mg/Kg dry	2	12/9/16 9:10	12/9/16 14:59	SW6020A	CCD
Metals by ICP									
***Arsenic**	**7.53**	0.586		mg/Kg dry	1	12/9/16 9:10	12/12/16 14:04	SW6010B	JTC
***Barium**	**83.0**	0.293		mg/Kg dry	1	12/9/16 9:10	12/12/16 14:04	SW6010B	JTC
***Cadmium**	**0.500**	0.293		mg/Kg dry	1	12/9/16 9:10	12/12/16 14:04	SW6010B	JTC
***Chromium**	**15.2**	0.293		mg/Kg dry	1	12/9/16 9:10	12/12/16 14:04	SW6010B	JTC
***Lead**	**14.4**	0.293		mg/Kg dry	1	12/9/16 9:10	12/12/16 14:04	SW6010B	JTC
Conventional Chemistry Parameters									
***pH**	**8.5**	0.010		pH Units	1	12/13/16 10:30	12/13/16 16:39	SW9045C	LAH
Percent Solids	**81.5**	0.100		%	1	12/13/16 14:00	12/14/16 12:19	ASTM D2974	LAH

Prairie Analytical Systems, Inc. **Date:** 12/21/2016

LABORATORY RESULTS

Client: Hampton, Lenzini and Renwick, Inc.
Project: 16.0805 Alexander Lumber Co Oswego **Lab Order:** 16L0223
Client Sample ID: B-06 3.0 **Lab ID:** 16L0223-06
Collection Date: 12/7/16 11:15 **Matrix:** Solid

Analyses	Result	Limit	Qual	Units	DF	Date Prepared	Date Analyzed	Method	Analyst
Volatile Organic Compounds by GC-MS									
***Acetone**	**0.329**	0.0500	C1	mg/Kg dry	1	12/15/16 13:47	12/15/16 22:27	SW8260B Re	AJD
*Benzene	U	0.00500		mg/Kg dry	1	12/15/16 13:47	12/15/16 22:27	SW8260B Re	AJD
*Bromodichloromethane	U	0.00500		mg/Kg dry	1	12/15/16 13:47	12/15/16 22:27	SW8260B Re	AJD
*Bromoform	U	0.00500		mg/Kg dry	1	12/15/16 13:47	12/15/16 22:27	SW8260B Re	AJD
*Bromomethane	U	0.0100		mg/Kg dry	1	12/15/16 13:47	12/15/16 22:27	SW8260B Re	AJD
*2-Butanone	U	0.0851		mg/Kg dry	1	12/15/16 13:47	12/15/16 22:27	SW8260B Re	AJD
*Carbon disulfide	U	0.0100		mg/Kg dry	1	12/15/16 13:47	12/15/16 22:27	SW8260B Re	AJD
*Carbon tetrachloride	U	0.00500		mg/Kg dry	1	12/15/16 13:47	12/15/16 22:27	SW8260B Re	AJD
*Chlorobenzene	U	0.00500		mg/Kg dry	1	12/15/16 13:47	12/15/16 22:27	SW8260B Re	AJD
*Chloroethane	U	0.0100		mg/Kg dry	1	12/15/16 13:47	12/15/16 22:27	SW8260B Re	AJD
*Chloroform	U	0.00500		mg/Kg dry	1	12/15/16 13:47	12/15/16 22:27	SW8260B Re	AJD
*Chloromethane	U	0.0100		mg/Kg dry	1	12/15/16 13:47	12/15/16 22:27	SW8260B Re	AJD
*Dibromochloromethane	U	0.00500		mg/Kg dry	1	12/15/16 13:47	12/15/16 22:27	SW8260B Re	AJD
*1,1-Dichloroethane	U	0.00500		mg/Kg dry	1	12/15/16 13:47	12/15/16 22:27	SW8260B Re	AJD
*1,2-Dichloroethane	U	0.00500		mg/Kg dry	1	12/15/16 13:47	12/15/16 22:27	SW8260B Re	AJD
*1,1-Dichloroethene	U	0.00500		mg/Kg dry	1	12/15/16 13:47	12/15/16 22:27	SW8260B Re	AJD
*cis-1,2-Dichloroethene	U	0.00500		mg/Kg dry	1	12/15/16 13:47	12/15/16 22:27	SW8260B Re	AJD
trans-1,2-Dichloroethene	U	0.00500		mg/Kg dry	1	12/15/16 13:47	12/15/16 22:27	SW8260B Re	AJD
*1,2-Dichloropropane	U	0.00500		mg/Kg dry	1	12/15/16 13:47	12/15/16 22:27	SW8260B Re	AJD
*cis-1,3-Dichloropropene	U	0.00300		mg/Kg dry	1	12/15/16 13:47	12/15/16 22:27	SW8260B Re	AJD
*trans-1,3-Dichloropropene	U	0.00300		mg/Kg dry	1	12/15/16 13:47	12/15/16 22:27	SW8260B Re	AJD
*Ethylbenzene	U	0.00500		mg/Kg dry	1	12/15/16 13:47	12/15/16 22:27	SW8260B Re	AJD
*2-Hexanone	U	0.00500		mg/Kg dry	1	12/15/16 13:47	12/15/16 22:27	SW8260B Re	AJD
*Methyl tert-butyl ether	U	0.00500		mg/Kg dry	1	12/15/16 13:47	12/15/16 22:27	SW8260B Re	AJD
*4-Methyl-2-pentanone	U	0.00500		mg/Kg dry	1	12/15/16 13:47	12/15/16 22:27	SW8260B Re	AJD
*Methylene chloride	U	0.00500		mg/Kg dry	1	12/15/16 13:47	12/15/16 22:27	SW8260B Re	AJD
*Styrene	U	0.00500		mg/Kg dry	1	12/15/16 13:47	12/15/16 22:27	SW8260B Re	AJD
*1,1,2,2-Tetrachloroethane	U	0.00200		mg/Kg dry	1	12/15/16 13:47	12/15/16 22:27	SW8260B Re	AJD
*Tetrachloroethene	U	0.00500		mg/Kg dry	1	12/15/16 13:47	12/15/16 22:27	SW8260B Re	AJD
*Toluene	U	0.00500		mg/Kg dry	1	12/15/16 13:47	12/15/16 22:27	SW8260B Re	AJD
*1,1,1-Trichloroethane	U	0.00500		mg/Kg dry	1	12/15/16 13:47	12/15/16 22:27	SW8260B Re	AJD
*1,1,2-Trichloroethane	U	0.00500		mg/Kg dry	1	12/15/16 13:47	12/15/16 22:27	SW8260B Re	AJD
Trichloroethene	U	0.00500		mg/Kg dry	1	12/15/16 13:47	12/15/16 22:27	SW8260B Re	AJD
*Vinyl chloride	U	0.00500		mg/Kg dry	1	12/15/16 13:47	12/15/16 22:27	SW8260B Re	AJD
*Xylenes (total)	U	0.0150		mg/Kg dry	1	12/15/16 13:47	12/15/16 22:27	SW8260B Re	AJD
Surrogate: 4-Bromofluorobenzene		*87 %*		*75-120*		12/15/16 13:47	12/15/16 22:27	SW8260B Re	AJD
Surrogate: 1,2-Dichloroethane-d4		*139 %*	S2	*75-119*		12/15/16 13:47	12/15/16 22:27	SW8260B Re	AJD
Surrogate: Toluene-d8		*97 %*		*78-114*		12/15/16 13:47	12/15/16 22:27	SW8260B Re	AJD
Semi-Volatile Organic Compounds by GC-MS									
*Acenaphthene	U	0.384		mg/Kg dry	1	12/9/16 12:34	12/14/16 3:57	SW8270C	JKA
*Acenaphthylene	U	0.384		mg/Kg dry	1	12/9/16 12:34	12/14/16 3:57	SW8270C	JKA
*Anthracene	U	0.384		mg/Kg dry	1	12/9/16 12:34	12/14/16 3:57	SW8270C	JKA
*Benzo(a)anthracene	U	0.384		mg/Kg dry	1	12/9/16 12:34	12/14/16 3:57	SW8270C	JKA
*Benzo(b)fluoranthene	U	0.384		mg/Kg dry	1	12/9/16 12:34	12/14/16 3:57	SW8270C	JKA
*Benzo(k)fluoranthene	U	0.384		mg/Kg dry	1	12/9/16 12:34	12/14/16 3:57	SW8270C	JKA
*Benzo(g,h,i)perylene	U	0.384		mg/Kg dry	1	12/9/16 12:34	12/14/16 3:57	SW8270C	JKA
*Benzo(a)pyrene	U	0.0692		mg/Kg dry	1	12/9/16 12:34	12/14/16 3:57	SW8270C	JKA
*Bis(2-chloroethoxy)methane	U	0.384		mg/Kg dry	1	12/9/16 12:34	12/14/16 3:57	SW8270C	JKA

Prairie Analytical Systems, Inc. **Date:** 12/21/2016

LABORATORY RESULTS

Client: Hampton, Lenzini and Renwick, Inc.
Project: 16.0805 Alexander Lumber Co Oswego **Lab Order:** 16L0223
Client Sample ID: B-06 3.0 **Lab ID:** 16L0223-06
Collection Date: 12/7/16 11:15 **Matrix:** Solid

Analyses	Result	Limit	Qual	Units	DF	Date Prepared	Date Analyzed	Method	Analyst
*Bis(2-chloroethyl)ether	U	0.384		mg/Kg dry	1	12/9/16 12:34	12/14/16 3:57	SW8270C	JKA
*Bis(2-chloroisopropyl)ether	U	0.384		mg/Kg dry	1	12/9/16 12:34	12/14/16 3:57	SW8270C	JKA
*Bis(2-ethylhexyl)phthalate	U	0.384		mg/Kg dry	1	12/9/16 12:34	12/14/16 3:57	SW8270C	JKA
*4-Bromophenyl phenyl ether	U	0.384		mg/Kg dry	1	12/9/16 12:34	12/14/16 3:57	SW8270C	JKA
*Butyl benzyl phthalate	U	0.384		mg/Kg dry	1	12/9/16 12:34	12/14/16 3:57	SW8270C	JKA
*Carbazole	U	0.384		mg/Kg dry	1	12/9/16 12:34	12/14/16 3:57	SW8270C	JKA
*4-Chloro-3-methylphenol	U	0.768		mg/Kg dry	1	12/9/16 12:34	12/14/16 3:57	SW8270C	JKA
*4-Chloroaniline	U	0.605		mg/Kg dry	1	12/9/16 12:34	12/14/16 3:57	SW8270C	JKA
*2-Chloronaphthalene	U	0.384		mg/Kg dry	1	12/9/16 12:34	12/14/16 3:57	SW8270C	JKA
*2-Chlorophenol	U	0.384		mg/Kg dry	1	12/9/16 12:34	12/14/16 3:57	SW8270C	JKA
*4-Chlorophenyl phenyl ether	U	0.384		mg/Kg dry	1	12/9/16 12:34	12/14/16 3:57	SW8270C	JKA
*Chrysene	U	0.384		mg/Kg dry	1	12/9/16 12:34	12/14/16 3:57	SW8270C	JKA
*Di-n-butyl phthalate	U	0.384		mg/Kg dry	1	12/9/16 12:34	12/14/16 3:57	SW8270C	JKA
*Di-n-octyl phthalate	U	0.384		mg/Kg dry	1	12/9/16 12:34	12/14/16 3:57	SW8270C	JKA
*Dibenz(a,h)anthracene	U	0.0692		mg/Kg dry	1	12/9/16 12:34	12/14/16 3:57	SW8270C	JKA
*Dibenzofuran	U	1.92		mg/Kg dry	1	12/9/16 12:34	12/14/16 3:57	SW8270C	JKA
*1,2-Dichlorobenzene	U	0.384		mg/Kg dry	1	12/9/16 12:34	12/14/16 3:57	SW8270C	JKA
*1,3-Dichlorobenzene	U	0.115		mg/Kg dry	1	12/9/16 12:34	12/14/16 3:57	SW8270C	JKA
*1,4-Dichlorobenzene	U	0.384		mg/Kg dry	1	12/9/16 12:34	12/14/16 3:57	SW8270C	JKA
*3,3'-Dichlorobenzidine	U	0.00576		mg/Kg dry	1	12/9/16 12:34	12/14/16 3:57	SW8270C	JKA
*2,4-Dichlorophenol	U	0.384		mg/Kg dry	1	12/9/16 12:34	12/14/16 3:57	SW8270C	JKA
*Diethyl phthalate	U	0.384		mg/Kg dry	1	12/9/16 12:34	12/14/16 3:57	SW8270C	JKA
*Dimethyl phthalate	U	0.384		mg/Kg dry	1	12/9/16 12:34	12/14/16 3:57	SW8270C	JKA
*2,4-Dimethylphenol	U	0.384		mg/Kg dry	1	12/9/16 12:34	12/14/16 3:57	SW8270C	JKA
*4,6-Dinitro-2-methylphenol	U	0.0261	M	mg/Kg dry	1	12/9/16 12:34	12/14/16 3:57	SW8270C	JKA
*2,4-Dinitrophenol	U	0.115		mg/Kg dry	1	12/9/16 12:34	12/14/16 3:57	SW8270C	JKA
*2,4-Dinitrotoluene	U	0.115		mg/Kg dry	1	12/9/16 12:34	12/14/16 3:57	SW8270C	JKA
*2,6-Dinitrotoluene	U	0.115		mg/Kg dry	1	12/9/16 12:34	12/14/16 3:57	SW8270C	JKA
*Fluoranthene	U	0.384		mg/Kg dry	1	12/9/16 12:34	12/14/16 3:57	SW8270C	JKA
*Fluorene	U	0.384		mg/Kg dry	1	12/9/16 12:34	12/14/16 3:57	SW8270C	JKA
*Hexachlorobenzene	U	0.115		mg/Kg dry	1	12/9/16 12:34	12/14/16 3:57	SW8270C	JKA
*Hexachlorobutadiene	U	0.384		mg/Kg dry	1	12/9/16 12:34	12/14/16 3:57	SW8270C	JKA
*Hexachlorocyclopentadiene	U	0.768		mg/Kg dry	1	12/9/16 12:34	12/14/16 3:57	SW8270C	JKA
*Hexachloroethane	U	0.384		mg/Kg dry	1	12/9/16 12:34	12/14/16 3:57	SW8270C	JKA
*Indeno(1,2,3-cd)pyrene	U	0.384		mg/Kg dry	1	12/9/16 12:34	12/14/16 3:57	SW8270C	JKA
*Isophorone	U	0.384		mg/Kg dry	1	12/9/16 12:34	12/14/16 3:57	SW8270C	JKA
*2-Methylnaphthalene	U	0.384		mg/Kg dry	1	12/9/16 12:34	12/14/16 3:57	SW8270C	JKA
*2-Methylphenol	U	0.384		mg/Kg dry	1	12/9/16 12:34	12/14/16 3:57	SW8270C	JKA
3 & 4-Methylphenol	U	0.115		mg/Kg dry	1	12/9/16 12:34	12/14/16 3:57	SW8270C	JKA
*Naphthalene	U	0.384		mg/Kg dry	1	12/9/16 12:34	12/14/16 3:57	SW8270C	JKA
*2-Nitroaniline	U	0.115		mg/Kg dry	1	12/9/16 12:34	12/14/16 3:57	SW8270C	JKA
*3-Nitroaniline	U	0.00576		mg/Kg dry	1	12/9/16 12:34	12/14/16 3:57	SW8270C	JKA
*4-Nitroaniline	U	0.0692		mg/Kg dry	1	12/9/16 12:34	12/14/16 3:57	SW8270C	JKA
*Nitrobenzene	U	0.0692		mg/Kg dry	1	12/9/16 12:34	12/14/16 3:57	SW8270C	JKA
*2-Nitrophenol	U	0.384		mg/Kg dry	1	12/9/16 12:34	12/14/16 3:57	SW8270C	JKA
*4-Nitrophenol	U	1.92		mg/Kg dry	1	12/9/16 12:34	12/14/16 3:57	SW8270C	JKA
*N-Nitroso-di-n-propylamine	U	0.000688	M	mg/Kg dry	1	12/9/16 12:34	12/14/16 3:57	SW8270C	JKA
*N-Nitrosodiphenylamine	U	0.384		mg/Kg dry	1	12/9/16 12:34	12/14/16 3:57	SW8270C	JKA
*Pentachlorophenol	U	0.0115		mg/Kg dry	1	12/9/16 12:34	12/14/16 3:57	SW8270C	JKA
*Phenanthrene	U	0.384		mg/Kg dry	1	12/9/16 12:34	12/14/16 3:57	SW8270C	JKA

Prairie Analytical Systems, Inc. **Date:** 12/21/2016

LABORATORY RESULTS

Client: Hampton, Lenzini and Renwick, Inc.
Project: 16.0805 Alexander Lumber Co Oswego **Lab Order:** 16L0223
Client Sample ID: B-06 3.0 **Lab ID:** 16L0223-06
Collection Date: 12/7/16 11:15 **Matrix:** Solid

Analyses	Result	Limit	Qual	Units	DF	Date Prepared	Date Analyzed	Method	Analyst
*Phenol	U	0.384		mg/Kg dry	1	12/9/16 12:34	12/14/16 3:57	SW8270C	JKA
*Pyrene	U	0.384		mg/Kg dry	1	12/9/16 12:34	12/14/16 3:57	SW8270C	JKA
*1,2,4-Trichlorobenzene	U	0.384		mg/Kg dry	1	12/9/16 12:34	12/14/16 3:57	SW8270C	JKA
*2,4,5-Trichlorophenol	U	0.384		mg/Kg dry	1	12/9/16 12:34	12/14/16 3:57	SW8270C	JKA
*2,4,6-Trichlorophenol	U	0.115		mg/Kg dry	1	12/9/16 12:34	12/14/16 3:57	SW8270C	JKA
Surrogate: 2-Fluorobiphenyl		*75 %*		*40-120*		12/9/16 12:34	12/14/16 3:57	SW8270C	JKA
Surrogate: 2-Fluorophenol		*48 %*		*20-115*		12/9/16 12:34	12/14/16 3:57	SW8270C	JKA
Surrogate: Nitrobenzene-d5		*91 %*		*45-135*		12/9/16 12:34	12/14/16 3:57	SW8270C	JKA
Surrogate: Phenol-d6		*53 %*		*20-100*		12/9/16 12:34	12/14/16 3:57	SW8270C	JKA
Surrogate: 4-Terphenyl-d14		*68 %*		*60-130*		12/9/16 12:34	12/14/16 3:57	SW8270C	JKA
Surrogate: 2,4,6-Tribromophenol		*54 %*		*30-100*		12/9/16 12:34	12/14/16 3:57	SW8270C	JKA
Polychlorinated Biphenyls by GC-ECD									
*Aroclor 1016	U	0.0387		mg/Kg dry	1	12/12/16 10:33	12/12/16 21:29	SW8082	AJD
*Aroclor 1221	U	0.0387		mg/Kg dry	1	12/12/16 10:33	12/12/16 21:29	SW8082	AJD
Aroclor 1232	U	0.0387		mg/Kg dry	1	12/12/16 10:33	12/12/16 21:29	SW8082	AJD
*Aroclor 1242	U	0.0387		mg/Kg dry	1	12/12/16 10:33	12/12/16 21:29	SW8082	AJD
*Aroclor 1248	U	0.0387		mg/Kg dry	1	12/12/16 10:33	12/12/16 21:29	SW8082	AJD
*Aroclor 1254	U	0.0387		mg/Kg dry	1	12/12/16 10:33	12/12/16 21:29	SW8082	AJD
*Aroclor 1260	U	0.0387		mg/Kg dry	1	12/12/16 10:33	12/12/16 21:29	SW8082	AJD
Surrogate: Decachlorobiphenyl		*53 %*	S	*60-140*		12/12/16 10:33	12/12/16 21:29	SW8082	AJD
Surrogate: Tetrachloro-m-xylene		*65 %*		*60-140*		12/12/16 10:33	12/12/16 21:29	SW8082	AJD
Metals by ICP-MS									
*Mercury	U	0.0930		mg/Kg dry	2	12/9/16 9:10	12/9/16 15:07	SW6020A	CCD
*Selenium	U	0.581		mg/Kg dry	2	12/9/16 9:10	12/9/16 15:07	SW6020A	CCD
*Silver	U	0.581		mg/Kg dry	2	12/9/16 9:10	12/9/16 15:07	SW6020A	CCD
Metals by ICP									
***Arsenic**	**5.10**	0.581		mg/Kg dry	1	12/9/16 9:10	12/12/16 14:10	SW6010B	JTC
***Barium**	**88.6**	0.291		mg/Kg dry	1	12/9/16 9:10	12/12/16 14:10	SW6010B	JTC
***Cadmium**	**0.516**	0.291		mg/Kg dry	1	12/9/16 9:10	12/12/16 14:10	SW6010B	JTC
***Chromium**	**10.8**	0.291		mg/Kg dry	1	12/9/16 9:10	12/12/16 14:10	SW6010B	JTC
***Lead**	**14.1**	0.291		mg/Kg dry	1	12/9/16 9:10	12/12/16 14:10	SW6010B	JTC
Conventional Chemistry Parameters									
***pH**	**7.9**	0.010		pH Units	1	12/13/16 10:30	12/13/16 16:39	SW9045C	LAH
Percent Solids	**85.9**	0.100		%	1	12/13/16 14:00	12/14/16 12:19	ASTM D2974	LAH

Prairie Analytical Systems, Inc. **Date:** 12/21/2016

LABORATORY RESULTS

Client: Hampton, Lenzini and Renwick, Inc.
Project: 16.0805 Alexander Lumber Co Oswego **Lab Order:** 16L0223
Client Sample ID: B-07 3.0 **Lab ID:** 16L0223-07
Collection Date: 12/7/16 11:00 **Matrix:** Solid

Analyses	Result	Limit	Qual	Units	DF	Date Prepared	Date Analyzed	Method	Analyst
Volatile Organic Compounds by GC-MS									
*Acetone	U	0.0466		mg/Kg dry	1	12/15/16 13:47	12/15/16 22:56	SW8260B Re	AJD
*Benzene	U	0.00458		mg/Kg dry	1	12/14/16 17:28	12/15/16 4:01	SW8260B Re	JLS
*Bromodichloromethane	U	0.00458		mg/Kg dry	1	12/14/16 17:28	12/15/16 4:01	SW8260B Re	JLS
*Bromoform	U	0.00458		mg/Kg dry	1	12/14/16 17:28	12/15/16 4:01	SW8260B Re	JLS
*Bromomethane	U	0.00916		mg/Kg dry	1	12/14/16 17:28	12/15/16 4:01	SW8260B Re	JLS
*2-Butanone	U	0.0128		mg/Kg dry	1	12/14/16 17:28	12/15/16 4:01	SW8260B Re	JLS
*Carbon disulfide	U	0.00916		mg/Kg dry	1	12/14/16 17:28	12/15/16 4:01	SW8260B Re	JLS
*Carbon tetrachloride	U	0.00458		mg/Kg dry	1	12/14/16 17:28	12/15/16 4:01	SW8260B Re	JLS
*Chlorobenzene	U	0.00458		mg/Kg dry	1	12/14/16 17:28	12/15/16 4:01	SW8260B Re	JLS
*Chloroethane	U	0.00916		mg/Kg dry	1	12/14/16 17:28	12/15/16 4:01	SW8260B Re	JLS
*Chloroform	U	0.00458		mg/Kg dry	1	12/14/16 17:28	12/15/16 4:01	SW8260B Re	JLS
*Chloromethane	U	0.00916		mg/Kg dry	1	12/14/16 17:28	12/15/16 4:01	SW8260B Re	JLS
*Dibromochloromethane	U	0.00458		mg/Kg dry	1	12/14/16 17:28	12/15/16 4:01	SW8260B Re	JLS
*1,1-Dichloroethane	U	0.00458		mg/Kg dry	1	12/14/16 17:28	12/15/16 4:01	SW8260B Re	JLS
*1,2-Dichloroethane	U	0.00458		mg/Kg dry	1	12/14/16 17:28	12/15/16 4:01	SW8260B Re	JLS
*1,1-Dichloroethene	U	0.00458		mg/Kg dry	1	12/14/16 17:28	12/15/16 4:01	SW8260B Re	JLS
*cis-1,2-Dichloroethene	U	0.00458		mg/Kg dry	1	12/14/16 17:28	12/15/16 4:01	SW8260B Re	JLS
trans-1,2-Dichloroethene	U	0.00458		mg/Kg dry	1	12/14/16 17:28	12/15/16 4:01	SW8260B Re	JLS
*1,2-Dichloropropane	U	0.00458		mg/Kg dry	1	12/14/16 17:28	12/15/16 4:01	SW8260B Re	JLS
*cis-1,3-Dichloropropene	U	0.00275		mg/Kg dry	1	12/14/16 17:28	12/15/16 4:01	SW8260B Re	JLS
*trans-1,3-Dichloropropene	U	0.00275		mg/Kg dry	1	12/14/16 17:28	12/15/16 4:01	SW8260B Re	JLS
*Ethylbenzene	U	0.00458		mg/Kg dry	1	12/14/16 17:28	12/15/16 4:01	SW8260B Re	JLS
*2-Hexanone	U	0.00458		mg/Kg dry	1	12/14/16 17:28	12/15/16 4:01	SW8260B Re	JLS
*Methyl tert-butyl ether	U	0.00458		mg/Kg dry	1	12/14/16 17:28	12/15/16 4:01	SW8260B Re	JLS
*4-Methyl-2-pentanone	U	0.00458		mg/Kg dry	1	12/14/16 17:28	12/15/16 4:01	SW8260B Re	JLS
*Methylene chloride	U	0.00458		mg/Kg dry	1	12/14/16 17:28	12/15/16 4:01	SW8260B Re	JLS
*Styrene	U	0.00458		mg/Kg dry	1	12/14/16 17:28	12/15/16 4:01	SW8260B Re	JLS
*1,1,2,2-Tetrachloroethane	U	0.00183		mg/Kg dry	1	12/14/16 17:28	12/15/16 4:01	SW8260B Re	JLS
*Tetrachloroethene	U	0.00458		mg/Kg dry	1	12/14/16 17:28	12/15/16 4:01	SW8260B Re	JLS
*Toluene	U	0.00458		mg/Kg dry	1	12/14/16 17:28	12/15/16 4:01	SW8260B Re	JLS
*1,1,1-Trichloroethane	U	0.00458		mg/Kg dry	1	12/14/16 17:28	12/15/16 4:01	SW8260B Re	JLS
*1,1,2-Trichloroethane	U	0.00458		mg/Kg dry	1	12/14/16 17:28	12/15/16 4:01	SW8260B Re	JLS
Trichloroethene	U	0.00458		mg/Kg dry	1	12/14/16 17:28	12/15/16 4:01	SW8260B Re	JLS
*Vinyl chloride	U	0.00458		mg/Kg dry	1	12/14/16 17:28	12/15/16 4:01	SW8260B Re	JLS
*Xylenes (total)	U	0.0137		mg/Kg dry	1	12/14/16 17:28	12/15/16 4:01	SW8260B Re	JLS
Surrogate: 4-Bromofluorobenzene		*79 %*		*75-120*		12/14/16 17:28	12/15/16 4:01	SW8260B Re	JLS
Surrogate: 4-Bromofluorobenzene		*78 %*		*75-120*		12/15/16 13:47	12/15/16 22:56	SW8260B Re	AJD
Surrogate: 1,2-Dichloroethane-d4		*83 %*		*75-119*		12/14/16 17:28	12/15/16 4:01	SW8260B Re	JLS
Surrogate: 1,2-Dichloroethane-d4		*70 %*	S2	*75-119*		12/15/16 13:47	12/15/16 22:56	SW8260B Re	AJD
Surrogate: Toluene-d8		*110 %*		*78-114*		12/14/16 17:28	12/15/16 4:01	SW8260B Re	JLS
Surrogate: Toluene-d8		*104 %*		*78-114*		12/15/16 13:47	12/15/16 22:56	SW8260B Re	AJD
Semi-Volatile Organic Compounds by GC-MS									
*Acenaphthene	U	0.360		mg/Kg dry	1	12/9/16 12:34	12/14/16 4:31	SW8270C	JKA
*Acenaphthylene	U	0.360		mg/Kg dry	1	12/9/16 12:34	12/14/16 4:31	SW8270C	JKA
*Anthracene	U	0.360		mg/Kg dry	1	12/9/16 12:34	12/14/16 4:31	SW8270C	JKA
*Benzo(a)anthracene	U	0.360		mg/Kg dry	1	12/9/16 12:34	12/14/16 4:31	SW8270C	JKA
*Benzo(b)fluoranthene	U	0.360		mg/Kg dry	1	12/9/16 12:34	12/14/16 4:31	SW8270C	JKA
*Benzo(k)fluoranthene	U	0.360		mg/Kg dry	1	12/9/16 12:34	12/14/16 4:31	SW8270C	JKA

Prairie Analytical Systems, Inc. **Date:** 12/21/2016

LABORATORY RESULTS

Client: Hampton, Lenzini and Renwick, Inc.
Project: 16.0805 Alexander Lumber Co Oswego **Lab Order:** 16L0223
Client Sample ID: B-07 3.0 **Lab ID:** 16L0223-07
Collection Date: 12/7/16 11:00 **Matrix:** Solid

Analyses	Result	Limit	Qual	Units	DF	Date Prepared	Date Analyzed	Method	Analyst
*Benzo(g,h,i)perylene	U	0.360		mg/Kg dry	1	12/9/16 12:34	12/14/16 4:31	SW8270C	JKA
*Benzo(a)pyrene	U	0.0648		mg/Kg dry	1	12/9/16 12:34	12/14/16 4:31	SW8270C	JKA
*Bis(2-chloroethoxy)methane	U	0.360		mg/Kg dry	1	12/9/16 12:34	12/14/16 4:31	SW8270C	JKA
*Bis(2-chloroethyl)ether	U	0.360		mg/Kg dry	1	12/9/16 12:34	12/14/16 4:31	SW8270C	JKA
*Bis(2-chloroisopropyl)ether	U	0.360		mg/Kg dry	1	12/9/16 12:34	12/14/16 4:31	SW8270C	JKA
*Bis(2-ethylhexyl)phthalate	U	0.360		mg/Kg dry	1	12/9/16 12:34	12/14/16 4:31	SW8270C	JKA
*4-Bromophenyl phenyl ether	U	0.360		mg/Kg dry	1	12/9/16 12:34	12/14/16 4:31	SW8270C	JKA
*Butyl benzyl phthalate	U	0.360		mg/Kg dry	1	12/9/16 12:34	12/14/16 4:31	SW8270C	JKA
*Carbazole	U	0.360		mg/Kg dry	1	12/9/16 12:34	12/14/16 4:31	SW8270C	JKA
*4-Chloro-3-methylphenol	U	0.720		mg/Kg dry	1	12/9/16 12:34	12/14/16 4:31	SW8270C	JKA
*4-Chloroaniline	U	0.567		mg/Kg dry	1	12/9/16 12:34	12/14/16 4:31	SW8270C	JKA
*2-Chloronaphthalene	U	0.360		mg/Kg dry	1	12/9/16 12:34	12/14/16 4:31	SW8270C	JKA
*2-Chlorophenol	U	0.360		mg/Kg dry	1	12/9/16 12:34	12/14/16 4:31	SW8270C	JKA
*4-Chlorophenyl phenyl ether	U	0.360		mg/Kg dry	1	12/9/16 12:34	12/14/16 4:31	SW8270C	JKA
*Chrysene	U	0.360		mg/Kg dry	1	12/9/16 12:34	12/14/16 4:31	SW8270C	JKA
*Di-n-butyl phthalate	U	0.360		mg/Kg dry	1	12/9/16 12:34	12/14/16 4:31	SW8270C	JKA
*Di-n-octyl phthalate	U	0.360		mg/Kg dry	1	12/9/16 12:34	12/14/16 4:31	SW8270C	JKA
*Dibenz(a,h)anthracene	U	0.0648		mg/Kg dry	1	12/9/16 12:34	12/14/16 4:31	SW8270C	JKA
*Dibenzofuran	U	1.80		mg/Kg dry	1	12/9/16 12:34	12/14/16 4:31	SW8270C	JKA
*1,2-Dichlorobenzene	U	0.360		mg/Kg dry	1	12/9/16 12:34	12/14/16 4:31	SW8270C	JKA
*1,3-Dichlorobenzene	U	0.108		mg/Kg dry	1	12/9/16 12:34	12/14/16 4:31	SW8270C	JKA
*1,4-Dichlorobenzene	U	0.360		mg/Kg dry	1	12/9/16 12:34	12/14/16 4:31	SW8270C	JKA
*3,3'-Dichlorobenzidine	U	0.00540		mg/Kg dry	1	12/9/16 12:34	12/14/16 4:31	SW8270C	JKA
*2,4-Dichlorophenol	U	0.360		mg/Kg dry	1	12/9/16 12:34	12/14/16 4:31	SW8270C	JKA
*Diethyl phthalate	U	0.360		mg/Kg dry	1	12/9/16 12:34	12/14/16 4:31	SW8270C	JKA
*Dimethyl phthalate	U	0.360		mg/Kg dry	1	12/9/16 12:34	12/14/16 4:31	SW8270C	JKA
*2,4-Dimethylphenol	U	0.360		mg/Kg dry	1	12/9/16 12:34	12/14/16 4:31	SW8270C	JKA
*4,6-Dinitro-2-methylphenol	U	0.0245	M	mg/Kg dry	1	12/9/16 12:34	12/14/16 4:31	SW8270C	JKA
*2,4-Dinitrophenol	U	0.108		mg/Kg dry	1	12/9/16 12:34	12/14/16 4:31	SW8270C	JKA
*2,4-Dinitrotoluene	U	0.108		mg/Kg dry	1	12/9/16 12:34	12/14/16 4:31	SW8270C	JKA
*2,6-Dinitrotoluene	U	0.108		mg/Kg dry	1	12/9/16 12:34	12/14/16 4:31	SW8270C	JKA
*Fluoranthene	U	0.360		mg/Kg dry	1	12/9/16 12:34	12/14/16 4:31	SW8270C	JKA
*Fluorene	U	0.360		mg/Kg dry	1	12/9/16 12:34	12/14/16 4:31	SW8270C	JKA
*Hexachlorobenzene	U	0.108		mg/Kg dry	1	12/9/16 12:34	12/14/16 4:31	SW8270C	JKA
*Hexachlorobutadiene	U	0.360		mg/Kg dry	1	12/9/16 12:34	12/14/16 4:31	SW8270C	JKA
*Hexachlorocyclopentadiene	U	0.720		mg/Kg dry	1	12/9/16 12:34	12/14/16 4:31	SW8270C	JKA
*Hexachloroethane	U	0.360		mg/Kg dry	1	12/9/16 12:34	12/14/16 4:31	SW8270C	JKA
*Indeno(1,2,3-cd)pyrene	U	0.360		mg/Kg dry	1	12/9/16 12:34	12/14/16 4:31	SW8270C	JKA
*Isophorone	U	0.360		mg/Kg dry	1	12/9/16 12:34	12/14/16 4:31	SW8270C	JKA
*2-Methylnaphthalene	U	0.360		mg/Kg dry	1	12/9/16 12:34	12/14/16 4:31	SW8270C	JKA
*2-Methylphenol	U	0.360		mg/Kg dry	1	12/9/16 12:34	12/14/16 4:31	SW8270C	JKA
3 & 4-Methylphenol	U	0.108		mg/Kg dry	1	12/9/16 12:34	12/14/16 4:31	SW8270C	JKA
*Naphthalene	U	0.360		mg/Kg dry	1	12/9/16 12:34	12/14/16 4:31	SW8270C	JKA
*2-Nitroaniline	U	0.108		mg/Kg dry	1	12/9/16 12:34	12/14/16 4:31	SW8270C	JKA
*3-Nitroaniline	U	0.00540		mg/Kg dry	1	12/9/16 12:34	12/14/16 4:31	SW8270C	JKA
*4-Nitroaniline	U	0.0648		mg/Kg dry	1	12/9/16 12:34	12/14/16 4:31	SW8270C	JKA
*Nitrobenzene	U	0.0648		mg/Kg dry	1	12/9/16 12:34	12/14/16 4:31	SW8270C	JKA
*2-Nitrophenol	U	0.360		mg/Kg dry	1	12/9/16 12:34	12/14/16 4:31	SW8270C	JKA
*4-Nitrophenol	U	1.80		mg/Kg dry	1	12/9/16 12:34	12/14/16 4:31	SW8270C	JKA
*N-Nitroso-di-n-propylamine	U	0.000644	M	mg/Kg dry	1	12/9/16 12:34	12/14/16 4:31	SW8270C	JKA

Prairie Analytical Systems, Inc. **Date:** 12/21/2016

LABORATORY RESULTS

Client: Hampton, Lenzini and Renwick, Inc.
Project: 16.0805 Alexander Lumber Co Oswego **Lab Order:** 16L0223
Client Sample ID: B-07 3.0 **Lab ID:** 16L0223-07
Collection Date: 12/7/16 11:00 **Matrix:** Solid

Analyses	Result	Limit	Qual	Units	DF	Date Prepared	Date Analyzed	Method	Analyst
*N-Nitrosodiphenylamine	U	0.360		mg/Kg dry	1	12/9/16 12:34	12/14/16 4:31	SW8270C	JKA
*Pentachlorophenol	U	0.0108		mg/Kg dry	1	12/9/16 12:34	12/14/16 4:31	SW8270C	JKA
*Phenanthrene	U	0.360		mg/Kg dry	1	12/9/16 12:34	12/14/16 4:31	SW8270C	JKA
*Phenol	U	0.360		mg/Kg dry	1	12/9/16 12:34	12/14/16 4:31	SW8270C	JKA
*Pyrene	U	0.360		mg/Kg dry	1	12/9/16 12:34	12/14/16 4:31	SW8270C	JKA
*1,2,4-Trichlorobenzene	U	0.360		mg/Kg dry	1	12/9/16 12:34	12/14/16 4:31	SW8270C	JKA
*2,4,5-Trichlorophenol	U	0.360		mg/Kg dry	1	12/9/16 12:34	12/14/16 4:31	SW8270C	JKA
*2,4,6-Trichlorophenol	U	0.108		mg/Kg dry	1	12/9/16 12:34	12/14/16 4:31	SW8270C	JKA
Surrogate: 2-Fluorobiphenyl		*89 %*		*40-120*		12/9/16 12:34	12/14/16 4:31	SW8270C	JKA
Surrogate: 2-Fluorophenol		*59 %*		*20-115*		12/9/16 12:34	12/14/16 4:31	SW8270C	JKA
Surrogate: Nitrobenzene-d5		*101 %*		*45-135*		12/9/16 12:34	12/14/16 4:31	SW8270C	JKA
Surrogate: Phenol-d6		*58 %*		*20-100*		12/9/16 12:34	12/14/16 4:31	SW8270C	JKA
Surrogate: 4-Terphenyl-d14		*88 %*		*60-130*		12/9/16 12:34	12/14/16 4:31	SW8270C	JKA
Surrogate: 2,4,6-Tribromophenol		*64 %*		*30-100*		12/9/16 12:34	12/14/16 4:31	SW8270C	JKA
Polychlorinated Biphenyls by GC-ECD									
*Aroclor 1016	U	0.0359		mg/Kg dry	1	12/12/16 10:33	12/12/16 21:51	SW8082	AJD
*Aroclor 1221	U	0.0359		mg/Kg dry	1	12/12/16 10:33	12/12/16 21:51	SW8082	AJD
Aroclor 1232	U	0.0359		mg/Kg dry	1	12/12/16 10:33	12/12/16 21:51	SW8082	AJD
*Aroclor 1242	U	0.0359		mg/Kg dry	1	12/12/16 10:33	12/12/16 21:51	SW8082	AJD
*Aroclor 1248	U	0.0359		mg/Kg dry	1	12/12/16 10:33	12/12/16 21:51	SW8082	AJD
*Aroclor 1254	U	0.0359		mg/Kg dry	1	12/12/16 10:33	12/12/16 21:51	SW8082	AJD
*Aroclor 1260	U	0.0359		mg/Kg dry	1	12/12/16 10:33	12/12/16 21:51	SW8082	AJD
Surrogate: Decachlorobiphenyl		*54 %*	S	*60-140*		12/12/16 10:33	12/12/16 21:51	SW8082	AJD
Surrogate: Tetrachloro-m-xylene		*80 %*		*60-140*		12/12/16 10:33	12/12/16 21:51	SW8082	AJD
Metals by ICP-MS									
*Mercury	U	0.0837		mg/Kg dry	2	12/12/16 10:00	12/12/16 23:36	SW6020A	CCD
*Selenium	U	0.523		mg/Kg dry	2	12/12/16 10:00	12/12/16 23:36	SW6020A	CCD
*Silver	U	0.523		mg/Kg dry	2	12/12/16 10:00	12/12/16 23:36	SW6020A	CCD
Metals by ICP									
***Arsenic**	**2.80**	0.523		mg/Kg dry	1	12/12/16 10:00	12/12/16 17:24	SW6010B	JTC
***Barium**	**14.8**	0.262		mg/Kg dry	1	12/12/16 10:00	12/12/16 17:24	SW6010B	JTC
***Cadmium**	**0.270**	0.262		mg/Kg dry	1	12/12/16 10:00	12/12/16 17:24	SW6010B	JTC
***Chromium**	**4.12**	0.262		mg/Kg dry	1	12/12/16 10:00	12/12/16 17:24	SW6010B	JTC
***Lead**	**12.8**	0.262		mg/Kg dry	1	12/12/16 10:00	12/12/16 17:24	SW6010B	JTC
Conventional Chemistry Parameters									
***pH**	**7.8**	0.010		pH Units	1	12/13/16 10:30	12/13/16 16:39	SW9045C	LAH
Percent Solids	**92.5**	0.100		%	1	12/13/16 14:00	12/14/16 12:19	ASTM D2974	LAH

Prairie Analytical Systems, Inc. **Date:** 12/21/2016

LABORATORY RESULTS

Client: Hampton, Lenzini and Renwick, Inc.
Project: 16.0805 Alexander Lumber Co Oswego **Lab Order:** 16L0223

Volatile Organic Compounds by GC-MS - Quality Control

Analyte	Result	Reporting Limit	Units	Spike Level	Source Result	%REC	%REC Limits	RPD	RPD Limit	Notes
Batch Z007398 - SW 5035A VOA										
Blank (Z007398-BLK1)				Prepared & Analyzed: 12/14/2016						
Acetone	U	0.0500	mg/Kg wet							
Benzene	U	0.00500	mg/Kg wet							
Bromodichloromethane	U	0.00500	mg/Kg wet							
Bromoform	U	0.00500	mg/Kg wet							
Bromomethane	U	0.0100	mg/Kg wet							
2-Butanone	U	0.0100	mg/Kg wet							
Carbon disulfide	U	0.0100	mg/Kg wet							
Carbon tetrachloride	U	0.00500	mg/Kg wet							
Chlorobenzene	U	0.00500	mg/Kg wet							
Chloroethane	U	0.0100	mg/Kg wet							
Chloroform	U	0.00500	mg/Kg wet							
Chloromethane	U	0.0100	mg/Kg wet							
Dibromochloromethane	U	0.00500	mg/Kg wet							
1,1-Dichloroethane	U	0.00500	mg/Kg wet							
1,2-Dichloroethane	U	0.00500	mg/Kg wet							
1,1-Dichloroethene	U	0.00500	mg/Kg wet							
cis-1,2-Dichloroethene	U	0.00500	mg/Kg wet							
trans-1,2-Dichloroethene	U	0.00500	mg/Kg wet							
1,2-Dichloropropane	U	0.00500	mg/Kg wet							
cis-1,3-Dichloropropene	U	0.00300	mg/Kg wet							M
trans-1,3-Dichloropropene	U	0.00300	mg/Kg wet							M
Ethylbenzene	U	0.00500	mg/Kg wet							
2-Hexanone	U	0.00500	mg/Kg wet							
Methyl tert-butyl ether	U	0.00500	mg/Kg wet							
4-Methyl-2-pentanone	U	0.00500	mg/Kg wet							
Methylene chloride	U	0.00500	mg/Kg wet							
Styrene	U	0.00500	mg/Kg wet							
1,1,2,2-Tetrachloroethane	U	0.00200	mg/Kg wet							M
Tetrachloroethene	U	0.00500	mg/Kg wet							
Toluene	U	0.00500	mg/Kg wet							
1,1,1-Trichloroethane	U	0.00500	mg/Kg wet							
1,1,2-Trichloroethane	U	0.00500	mg/Kg wet							
Trichloroethene	U	0.00500	mg/Kg wet							
Vinyl chloride	U	0.00500	mg/Kg wet							M
Xylenes (total)	U	0.0150	mg/Kg wet							
Surrogate: 4-Bromofluorobenzene	*0.0463*		*mg/Kg wet*	*0.050000*		*93*	*75-120*			
Surrogate: 1,2-Dichloroethane-d4	*0.0691*		*mg/Kg wet*	*0.050000*		*138*	*75-119*			*S2*
Surrogate: Toluene-d8	*0.0498*		*mg/Kg wet*	*0.050000*		*100*	*78-114*			

Prairie Analytical Systems, Inc. **Date:** 12/21/2016

LABORATORY RESULTS

Client: Hampton, Lenzini and Renwick, Inc.
Project: 16.0805 Alexander Lumber Co Oswego **Lab Order:** 16L0223

Volatile Organic Compounds by GC-MS - Quality Control

Analyte	Result	Reporting Limit	Units	Spike Level	Source Result	%REC	%REC Limits	RPD	RPD Limit	Notes
Batch Z007398 - SW 5035A VOA										
LCS (Z007398-BS1)				Prepared & Analyzed: 12/14/2016						
Benzene	0.0456	0.00500	mg/Kg wet	0.050000		91	80-130			
Chlorobenzene	0.0467	0.00500	mg/Kg wet	0.050000		93	85-120			
1,1-Dichloroethene	0.0603	0.00500	mg/Kg wet	0.050000		121	70-130			
Ethylbenzene	0.0496	0.00500	mg/Kg wet	0.050000		99	77-132			
Toluene	0.0474	0.00500	mg/Kg wet	0.050000		95	80-130			
Trichloroethene	0.0463	0.00500	mg/Kg wet	0.050000		93	75-130			
Xylenes (total)	0.148	0.0150	mg/Kg wet	0.15000		99	80-130			
Surrogate: 4-Bromofluorobenzene	*0.0483*		*mg/Kg wet*	*0.050000*		*97*	*75-120*			
Surrogate: 1,2-Dichloroethane-d4	*0.0582*		*mg/Kg wet*	*0.050000*		*116*	*75-119*			
Surrogate: Toluene-d8	*0.0495*		*mg/Kg wet*	*0.050000*		*99*	*78-114*			
Matrix Spike (Z007398-MS1)		**Source: 16L0259-08**		Prepared & Analyzed: 12/14/2016						
Benzene	0.132	0.0153	mg/Kg dry	0.15331	ND	86	50-140			
Chlorobenzene	0.126	0.0153	mg/Kg dry	0.15331	ND	82	60-130			
1,1-Dichloroethene	0.185	0.0153	mg/Kg dry	0.15331	ND	121	60-130			
Ethylbenzene	0.164	0.0153	mg/Kg dry	0.15331	ND	107	50-140			
Toluene	0.190	0.0153	mg/Kg dry	0.15331	ND	124	55-130			
Trichloroethene	0.119	0.0153	mg/Kg dry	0.15331	ND	77	60-130			
Xylenes (total)	0.466	0.0460	mg/Kg dry	0.45992	ND	101	60-130			
Surrogate: 4-Bromofluorobenzene	*0.112*		*mg/Kg dry*	*0.15331*		*73*	*75-120*			*S*
Surrogate: 1,2-Dichloroethane-d4	*0.129*		*mg/Kg dry*	*0.15331*		*84*	*75-119*			
Surrogate: Toluene-d8	*0.205*		*mg/Kg dry*	*0.15331*		*133*	*78-114*			*S*
Matrix Spike Dup (Z007398-MSD1)		**Source: 16L0259-08**		Prepared & Analyzed: 12/14/2016						
Benzene	0.104	0.0131	mg/Kg dry	0.13057	ND	80	50-140	24	20	R
Chlorobenzene	0.0991	0.0131	mg/Kg dry	0.13057	ND	76	60-130	24	20	R
1,1-Dichloroethene	0.144	0.0131	mg/Kg dry	0.13057	ND	111	60-130	25	20	R
Ethylbenzene	0.119	0.0131	mg/Kg dry	0.13057	ND	91	50-140	31	25	R
Toluene	0.140	0.0131	mg/Kg dry	0.13057	ND	107	55-130	30	25	R
Trichloroethene	0.100	0.0131	mg/Kg dry	0.13057	ND	77	60-130	17	20	
Xylenes (total)	0.353	0.0392	mg/Kg dry	0.39171	ND	90	60-130	28	25	R
Surrogate: 4-Bromofluorobenzene	*0.0966*		*mg/Kg dry*	*0.13057*		*74*	*75-120*			*S*
Surrogate: 1,2-Dichloroethane-d4	*0.100*		*mg/Kg dry*	*0.13057*		*77*	*75-119*			
Surrogate: Toluene-d8	*0.172*		*mg/Kg dry*	*0.13057*		*131*	*78-114*			*S*

Prairie Analytical Systems, Inc. **Date:** 12/21/2016

LABORATORY RESULTS

Client: Hampton, Lenzini and Renwick, Inc.
Project: 16.0805 Alexander Lumber Co Oswego **Lab Order:** 16L0223

Volatile Organic Compounds by GC-MS - Quality Control

Analyte	Result	Reporting Limit	Units	Spike Level	Source Result	%REC	%REC Limits	RPD	RPD Limit	Notes
Batch Z007401 - SW 5035A VOA										
Blank (Z007401-BLK1)				Prepared: 12/14/2016 Analyzed: 12/15/2016						
Acetone	U	0.0500	mg/Kg wet							
Benzene	U	0.00500	mg/Kg wet							
Bromodichloromethane	U	0.00500	mg/Kg wet							
Bromoform	U	0.00500	mg/Kg wet							
Bromomethane	U	0.0100	mg/Kg wet							
2-Butanone	U	0.0100	mg/Kg wet							
Carbon disulfide	U	0.0100	mg/Kg wet							
Carbon tetrachloride	U	0.00500	mg/Kg wet							
Chlorobenzene	U	0.00500	mg/Kg wet							
Chloroethane	U	0.0100	mg/Kg wet							
Chloroform	U	0.00500	mg/Kg wet							
Chloromethane	U	0.0100	mg/Kg wet							
Dibromochloromethane	U	0.00500	mg/Kg wet							
1,1-Dichloroethane	U	0.00500	mg/Kg wet							
1,2-Dichloroethane	U	0.00500	mg/Kg wet							
1,1-Dichloroethene	U	0.00500	mg/Kg wet							
cis-1,2-Dichloroethene	U	0.00500	mg/Kg wet							
trans-1,2-Dichloroethene	U	0.00500	mg/Kg wet							
1,2-Dichloropropane	U	0.00500	mg/Kg wet							
cis-1,3-Dichloropropene	U	0.00300	mg/Kg wet							
trans-1,3-Dichloropropene	U	0.00300	mg/Kg wet							
Ethylbenzene	U	0.00500	mg/Kg wet							
2-Hexanone	U	0.00500	mg/Kg wet							
Methyl tert-butyl ether	U	0.00500	mg/Kg wet							
4-Methyl-2-pentanone	U	0.00500	mg/Kg wet							
Methylene chloride	U	0.00500	mg/Kg wet							
Styrene	U	0.00500	mg/Kg wet							
1,1,2,2-Tetrachloroethane	U	0.00200	mg/Kg wet							
Tetrachloroethene	U	0.00500	mg/Kg wet							
Toluene	U	0.00500	mg/Kg wet							
1,1,1-Trichloroethane	U	0.00500	mg/Kg wet							
1,1,2-Trichloroethane	U	0.00500	mg/Kg wet							
Trichloroethene	U	0.00500	mg/Kg wet							
Vinyl chloride	U	0.00500	mg/Kg wet							
Xylenes (total)	U	0.0150	mg/Kg wet							
Surrogate: 4-Bromofluorobenzene	*0.0414*		*mg/Kg wet*	*0.050000*		*83*	*75-120*			
Surrogate: 1,2-Dichloroethane-d4	*0.0356*		*mg/Kg wet*	*0.050000*		*71*	*75-119*			*S*
Surrogate: Toluene-d8	*0.0493*		*mg/Kg wet*	*0.050000*		*99*	*78-114*			

Prairie Analytical Systems, Inc. **Date:** 12/21/2016

LABORATORY RESULTS

Client: Hampton, Lenzini and Renwick, Inc.
Project: 16.0805 Alexander Lumber Co Oswego **Lab Order:** 16L0223

Volatile Organic Compounds by GC-MS - Quality Control

Analyte	Result	Reporting Limit	Units	Spike Level	Source Result	%REC	%REC Limits	RPD	RPD Limit	Notes
Batch Z007401 - SW 5035A VOA										
LCS (Z007401-BS1)				Prepared: 12/14/2016 Analyzed: 12/15/2016						
Benzene	0.0483	0.00500	mg/Kg wet	0.050000		97	80-130			
Chlorobenzene	0.0444	0.00500	mg/Kg wet	0.050000		89	85-120			
1,1-Dichloroethene	0.0555	0.00500	mg/Kg wet	0.050000		111	70-130			
Ethylbenzene	0.0478	0.00500	mg/Kg wet	0.050000		96	77-132			
Toluene	0.0471	0.00500	mg/Kg wet	0.050000		94	80-130			
Trichloroethene	0.0456	0.00500	mg/Kg wet	0.050000		91	75-130			
Xylenes (total)	0.147	0.0150	mg/Kg wet	0.15000		98	80-130			
Surrogate: 4-Bromofluorobenzene	*0.0504*		*mg/Kg wet*	*0.050000*		*101*	*75-120*			
Surrogate: 1,2-Dichloroethane-d4	*0.0632*		*mg/Kg wet*	*0.050000*		*126*	*75-119*			*S*
Surrogate: Toluene-d8	*0.0483*		*mg/Kg wet*	*0.050000*		*97*	*78-114*			
Matrix Spike (Z007401-MS1)		**Source: 16L0264-01**		Prepared: 12/14/2016 Analyzed: 12/15/2016						
Benzene	0.0851	0.0121	mg/Kg dry	0.12142	ND	70	50-140			
Chlorobenzene	0.0767	0.0121	mg/Kg dry	0.12142	ND	63	60-130			
1,1-Dichloroethene	0.0984	0.0121	mg/Kg dry	0.12142	ND	81	60-130			
Ethylbenzene	0.0779	0.0121	mg/Kg dry	0.12142	ND	64	50-140			
Toluene	0.0765	0.0121	mg/Kg dry	0.12142	ND	63	55-130			
Trichloroethene	0.0889	0.0121	mg/Kg dry	0.12142	ND	73	60-130			
Xylenes (total)	0.209	0.0364	mg/Kg dry	0.36425	ND	57	60-130			S
Surrogate: 4-Bromofluorobenzene	*0.106*		*mg/Kg dry*	*0.12142*		*87*	*75-120*			
Surrogate: 1,2-Dichloroethane-d4	*0.0807*		*mg/Kg dry*	*0.12142*		*66*	*75-119*			*S*
Surrogate: Toluene-d8	*0.132*		*mg/Kg dry*	*0.12142*		*108*	*78-114*			
Matrix Spike Dup (Z007401-MSD1)		**Source: 16L0264-01**		Prepared: 12/14/2016 Analyzed: 12/15/2016						
Benzene	0.107	0.0137	mg/Kg dry	0.13659	ND	78	50-140	23	20	R
Chlorobenzene	0.0832	0.0137	mg/Kg dry	0.13659	ND	61	60-130	8	20	
1,1-Dichloroethene	0.135	0.0137	mg/Kg dry	0.13659	ND	99	60-130	31	20	R
Ethylbenzene	0.102	0.0137	mg/Kg dry	0.13659	ND	74	50-140	26	25	R
Toluene	0.116	0.0137	mg/Kg dry	0.13659	ND	85	55-130	41	25	R
Trichloroethene	0.0999	0.0137	mg/Kg dry	0.13659	ND	73	60-130	12	20	
Xylenes (total)	0.292	0.0410	mg/Kg dry	0.40978	ND	71	60-130	33	25	R
Surrogate: 4-Bromofluorobenzene	*0.112*		*mg/Kg dry*	*0.13659*		*82*	*75-120*			
Surrogate: 1,2-Dichloroethane-d4	*0.0989*		*mg/Kg dry*	*0.13659*		*72*	*75-119*			*S*
Surrogate: Toluene-d8	*0.159*		*mg/Kg dry*	*0.13659*		*116*	*78-114*			*S*

Prairie Analytical Systems, Inc. **Date:** 12/21/2016

LABORATORY RESULTS

Client: Hampton, Lenzini and Renwick, Inc.
Project: 16.0805 Alexander Lumber Co Oswego **Lab Order:** 16L0223

Volatile Organic Compounds by GC-MS - Quality Control

Analyte	Result	Reporting Limit	Units	Spike Level	Source Result	%REC	%REC Limits	RPD	RPD Limit	Notes
Batch Z007426 - SW 5035A VOA										
Blank (Z007426-BLK1)				Prepared & Analyzed: 12/15/2016						
Acetone	U	0.0500	mg/Kg wet							
Benzene	U	0.00500	mg/Kg wet							
Bromodichloromethane	U	0.00500	mg/Kg wet							
Bromoform	U	0.00500	mg/Kg wet							
Bromomethane	U	0.0100	mg/Kg wet							
2-Butanone	U	0.0100	mg/Kg wet							
Carbon disulfide	U	0.0100	mg/Kg wet							
Carbon tetrachloride	U	0.00500	mg/Kg wet							
Chlorobenzene	U	0.00500	mg/Kg wet							
Chloroethane	U	0.0100	mg/Kg wet							
Chloroform	U	0.00500	mg/Kg wet							
Chloromethane	U	0.0100	mg/Kg wet							
Dibromochloromethane	U	0.00500	mg/Kg wet							
1,1-Dichloroethane	U	0.00500	mg/Kg wet							
1,2-Dichloroethane	U	0.00500	mg/Kg wet							
1,1-Dichloroethene	U	0.00500	mg/Kg wet							
cis-1,2-Dichloroethene	U	0.00500	mg/Kg wet							
trans-1,2-Dichloroethene	U	0.00500	mg/Kg wet							
1,2-Dichloropropane	U	0.00500	mg/Kg wet							
cis-1,3-Dichloropropene	U	0.00300	mg/Kg wet							
trans-1,3-Dichloropropene	U	0.00300	mg/Kg wet							
Ethylbenzene	U	0.00500	mg/Kg wet							
2-Hexanone	U	0.00500	mg/Kg wet							
Methyl tert-butyl ether	U	0.00500	mg/Kg wet							
4-Methyl-2-pentanone	U	0.00500	mg/Kg wet							
Methylene chloride	U	0.00500	mg/Kg wet							
Styrene	U	0.00500	mg/Kg wet							
1,1,2,2-Tetrachloroethane	U	0.00200	mg/Kg wet							
Tetrachloroethene	U	0.00500	mg/Kg wet							
Toluene	U	0.00500	mg/Kg wet							
1,1,1-Trichloroethane	U	0.00500	mg/Kg wet							
1,1,2-Trichloroethane	U	0.00500	mg/Kg wet							
Trichloroethene	U	0.00500	mg/Kg wet							
Vinyl chloride	U	0.00500	mg/Kg wet							
Xylenes (total)	U	0.0150	mg/Kg wet							
Surrogate: 4-Bromofluorobenzene	*0.0458*		*mg/Kg wet*	*0.050000*		*92*	*75-120*			
Surrogate: 1,2-Dichloroethane-d4	*0.0611*		*mg/Kg wet*	*0.050000*		*122*	*75-119*			*S2*
Surrogate: Toluene-d8	*0.0488*		*mg/Kg wet*	*0.050000*		*97*	*78-114*			

Prairie Analytical Systems, Inc. **Date:** 12/21/2016

LABORATORY RESULTS

Client: Hampton, Lenzini and Renwick, Inc.
Project: 16.0805 Alexander Lumber Co Oswego **Lab Order:** 16L0223

Volatile Organic Compounds by GC-MS - Quality Control

Analyte	Result	Reporting Limit	Units	Spike Level	Source Result	%REC	%REC Limits	RPD	RPD Limit	Notes
Batch Z007426 - SW 5035A VOA										
LCS (Z007426-BS1)				Prepared & Analyzed: 12/15/2016						
Benzene	0.0495	0.00500	mg/Kg wet	0.050000		99	80-130			
Chlorobenzene	0.0503	0.00500	mg/Kg wet	0.050000		101	85-120			
1,1-Dichloroethene	0.0522	0.00500	mg/Kg wet	0.050000		104	70-130			
Ethylbenzene	0.0514	0.00500	mg/Kg wet	0.050000		103	77-132			
Toluene	0.0500	0.00500	mg/Kg wet	0.050000		100	80-130			
Trichloroethene	0.0510	0.00500	mg/Kg wet	0.050000		102	75-130			
Xylenes (total)	0.161	0.0150	mg/Kg wet	0.15000		107	80-130			
Surrogate: 4-Bromofluorobenzene	*0.0533*		*mg/Kg wet*	*0.050000*		*107*	*75-120*			
Surrogate: 1,2-Dichloroethane-d4	*0.0397*		*mg/Kg wet*	*0.050000*		*79*	*75-119*			
Surrogate: Toluene-d8	*0.0483*		*mg/Kg wet*	*0.050000*		*97*	*78-114*			
Matrix Spike (Z007426-MS1)		**Source: 16L0223-05RE1**		Prepared & Analyzed: 12/15/2016						
Benzene	0.0916	0.0115	mg/Kg dry	0.11538	ND	79	50-140			
Chlorobenzene	0.0868	0.0115	mg/Kg dry	0.11538	ND	75	60-130			
1,1-Dichloroethene	0.120	0.0115	mg/Kg dry	0.11538	ND	104	60-130			
Ethylbenzene	0.0916	0.0115	mg/Kg dry	0.11538	ND	79	50-140			
Toluene	0.0959	0.0115	mg/Kg dry	0.11538	ND	83	55-130			
Trichloroethene	0.0964	0.0115	mg/Kg dry	0.11538	ND	84	60-130			
Xylenes (total)	0.281	0.0346	mg/Kg dry	0.34613	ND	81	60-130			
Surrogate: 4-Bromofluorobenzene	*0.107*		*mg/Kg dry*	*0.11538*		*93*	*75-120*			
Surrogate: 1,2-Dichloroethane-d4	*0.167*		*mg/Kg dry*	*0.11538*		*145*	*75-119*			*S*
Surrogate: Toluene-d8	*0.116*		*mg/Kg dry*	*0.11538*		*101*	*78-114*			
Matrix Spike Dup (Z007426-MSD1)		**Source: 16L0223-05RE1**		Prepared & Analyzed: 12/15/2016						
Benzene	0.0957	0.0126	mg/Kg dry	0.12578	ND	76	50-140	4	20	
Chlorobenzene	0.0873	0.0126	mg/Kg dry	0.12578	ND	69	60-130	0.6	20	
1,1-Dichloroethene	0.108	0.0126	mg/Kg dry	0.12578	ND	86	60-130	10	20	
Ethylbenzene	0.0959	0.0126	mg/Kg dry	0.12578	ND	76	50-140	5	25	
Toluene	0.0996	0.0126	mg/Kg dry	0.12578	ND	79	55-130	4	25	
Trichloroethene	0.0954	0.0126	mg/Kg dry	0.12578	ND	76	60-130	1	20	
Xylenes (total)	0.290	0.0377	mg/Kg dry	0.37734	ND	77	60-130	3	25	
Surrogate: 4-Bromofluorobenzene	*0.115*		*mg/Kg dry*	*0.12578*		*92*	*75-120*			
Surrogate: 1,2-Dichloroethane-d4	*0.0907*		*mg/Kg dry*	*0.12578*		*72*	*75-119*			*S*
Surrogate: Toluene-d8	*0.129*		*mg/Kg dry*	*0.12578*		*103*	*78-114*			

Prairie Analytical Systems, Inc. **Date:** 12/21/2016

LABORATORY RESULTS

Client: Hampton, Lenzini and Renwick, Inc.
Project: 16.0805 Alexander Lumber Co Oswego **Lab Order:** 16L0223

Semi-Volatile Organic Compounds by GC-MS - Quality Control

Analyte	Result	Reporting Limit	Units	Spike Level	Source Result	%REC	%REC Limits	RPD	RPD Limit	Notes
Batch Z007285 - SW 3550B BNA										
Blank (Z007285-BLK1)				Prepared: 12/09/2016 Analyzed: 12/13/2016						
Acenaphthene	U	0.333	mg/Kg wet							
Acenaphthylene	U	0.333	mg/Kg wet							
Anthracene	U	0.333	mg/Kg wet							
Benzo(a)anthracene	U	0.333	mg/Kg wet							
Benzo(b)fluoranthene	U	0.333	mg/Kg wet							
Benzo(k)fluoranthene	U	0.333	mg/Kg wet							
Benzo(g,h,i)perylene	U	0.333	mg/Kg wet							
Benzo(a)pyrene	U	0.0600	mg/Kg wet							
Bis(2-chloroethoxy)methane	U	0.333	mg/Kg wet							
Bis(2-chloroethyl)ether	U	0.333	mg/Kg wet							M
Bis(2-chloroisopropyl)ether	U	0.333	mg/Kg wet							
Bis(2-ethylhexyl)phthalate	U	0.333	mg/Kg wet							
4-Bromophenyl phenyl ether	U	0.333	mg/Kg wet							
Butyl benzyl phthalate	U	0.333	mg/Kg wet							
Carbazole	U	0.333	mg/Kg wet							
4-Chloro-3-methylphenol	U	0.666	mg/Kg wet							
4-Chloroaniline	U	0.525	mg/Kg wet							
2-Chloronaphthalene	U	0.333	mg/Kg wet							
2-Chlorophenol	U	0.333	mg/Kg wet							
4-Chlorophenyl phenyl ether	U	0.333	mg/Kg wet							
Chrysene	U	0.333	mg/Kg wet							
Di-n-butyl phthalate	U	0.333	mg/Kg wet							
Di-n-octyl phthalate	U	0.333	mg/Kg wet							
Dibenz(a,h)anthracene	U	0.0600	mg/Kg wet							
Dibenzofuran	U	1.66	mg/Kg wet							
1,2-Dichlorobenzene	U	0.333	mg/Kg wet							
1,3-Dichlorobenzene	U	0.100	mg/Kg wet							
1,4-Dichlorobenzene	U	0.333	mg/Kg wet							
3,3'-Dichlorobenzidine	U	0.00500	mg/Kg wet							
2,4-Dichlorophenol	U	0.333	mg/Kg wet							
Diethyl phthalate	U	0.333	mg/Kg wet							
Dimethyl phthalate	U	0.333	mg/Kg wet							
2,4-Dimethylphenol	U	0.333	mg/Kg wet							
4,6-Dinitro-2-methylphenol	U	1.66	mg/Kg wet							M
2,4-Dinitrophenol	U	0.100	mg/Kg wet							
2,4-Dinitrotoluene	U	0.100	mg/Kg wet							
2,6-Dinitrotoluene	U	0.100	mg/Kg wet							
Fluoranthene	U	0.333	mg/Kg wet							
Fluorene	U	0.333	mg/Kg wet							
Hexachlorobenzene	U	0.100	mg/Kg wet							
Hexachlorobutadiene	U	0.333	mg/Kg wet							
Hexachlorocyclopentadiene	U	0.666	mg/Kg wet							
Hexachloroethane	U	0.333	mg/Kg wet							
Indeno(1,2,3-cd)pyrene	U	0.333	mg/Kg wet							

Prairie Analytical Systems, Inc. **Date:** 12/21/2016

LABORATORY RESULTS

Client: Hampton, Lenzini and Renwick, Inc.
Project: 16.0805 Alexander Lumber Co Oswego **Lab Order:** 16L0223

Semi-Volatile Organic Compounds by GC-MS - Quality Control

Analyte	Result	Reporting Limit	Units	Spike Level	Source Result	%REC	%REC Limits	RPD	RPD Limit	Notes
Batch Z007285 - SW 3550B BNA										
Blank (Z007285-BLK1)				Prepared: 12/09/2016 Analyzed: 12/13/2016						
Isophorone	U	0.333	mg/Kg wet							
2-Methylnaphthalene	U	0.333	mg/Kg wet							
2-Methylphenol	U	0.333	mg/Kg wet							
3 & 4-Methylphenol	U	0.100	mg/Kg wet							
Naphthalene	U	0.333	mg/Kg wet							
2-Nitroaniline	U	0.100	mg/Kg wet							
3-Nitroaniline	U	0.00500	mg/Kg wet							
4-Nitroaniline	U	0.0600	mg/Kg wet							
Nitrobenzene	U	0.0600	mg/Kg wet							
2-Nitrophenol	U	0.333	mg/Kg wet							
4-Nitrophenol	U	1.66	mg/Kg wet							
N-Nitroso-di-n-propylamine	U	0.00100	mg/Kg wet							M
N-Nitrosodiphenylamine	U	0.333	mg/Kg wet							
Pentachlorophenol	U	0.0100	mg/Kg wet							
Phenanthrene	U	0.333	mg/Kg wet							
Phenol	U	0.333	mg/Kg wet							
Pyrene	U	0.333	mg/Kg wet							
1,2,4-Trichlorobenzene	U	0.333	mg/Kg wet							
2,4,5-Trichlorophenol	U	0.333	mg/Kg wet							
2,4,6-Trichlorophenol	U	0.100	mg/Kg wet							
Surrogate: 2-Fluorobiphenyl	*0.591*		*mg/Kg wet*	*0.66667*		*89*	*40-120*			
Surrogate: 2-Fluorophenol	*0.687*		*mg/Kg wet*	*1.0000*		*69*	*20-115*			
Surrogate: Nitrobenzene-d5	*0.830*		*mg/Kg wet*	*0.66667*		*125*	*45-135*			
Surrogate: Phenol-d6	*0.800*		*mg/Kg wet*	*1.0000*		*80*	*20-100*			
Surrogate: 4-Terphenyl-d14	*0.655*		*mg/Kg wet*	*0.66667*		*98*	*60-130*			
Surrogate: 2,4,6-Tribromophenol	*0.781*		*mg/Kg wet*	*1.0000*		*78*	*30-100*			
LCS (Z007285-BS1)				Prepared: 12/09/2016 Analyzed: 12/13/2016						
Acenaphthene	0.644	0.333	mg/Kg wet	0.66667		97	30-140			
4-Chloro-3-methylphenol	1.17	0.666	mg/Kg wet	1.3333		88	30-180			
2-Chlorophenol	1.46	0.333	mg/Kg wet	1.3333		110	35-150			
1,4-Dichlorobenzene	0.700	0.333	mg/Kg wet	0.66667		105	30-105			
2,4-Dinitrotoluene	0.780	0.100	mg/Kg wet	0.66667		117	35-130			
4-Nitrophenol	1.63	1.66	mg/Kg wet	1.3333		122	30-150			
N-Nitroso-di-n-propylamine	0.681	0.00100	mg/Kg wet	0.66667		102	40-130			
Pentachlorophenol	1.75	0.0100	mg/Kg wet	1.3333		131	40-190			
Phenol	1.29	0.333	mg/Kg wet	1.3333		97	30-190			
Pyrene	0.826	0.333	mg/Kg wet	0.66667		124	35-140			
1,2,4-Trichlorobenzene	0.652	0.333	mg/Kg wet	0.66667		98	40-115			
Surrogate: 2-Fluorobiphenyl	*0.665*		*mg/Kg wet*	*0.66667*		*100*	*40-120*			
Surrogate: 2-Fluorophenol	*0.635*		*mg/Kg wet*	*1.0000*		*64*	*20-115*			
Surrogate: Nitrobenzene-d5	*0.703*		*mg/Kg wet*	*0.66667*		*105*	*45-135*			
Surrogate: Phenol-d6	*0.656*		*mg/Kg wet*	*1.0000*		*66*	*20-100*			
Surrogate: 4-Terphenyl-d14	*0.665*		*mg/Kg wet*	*0.66667*		*100*	*60-130*			
Surrogate: 2,4,6-Tribromophenol	*0.787*		*mg/Kg wet*	*1.0000*		*79*	*30-100*			

Prairie Analytical Systems, Inc. **Date:** 12/21/2016

LABORATORY RESULTS

Client: Hampton, Lenzini and Renwick, Inc.
Project: 16.0805 Alexander Lumber Co Oswego **Lab Order:** 16L0223

Polychlorinated Biphenyls by GC-ECD - Quality Control

Analyte	Result	Reporting Limit	Units	Spike Level	Source Result	%REC	%REC Limits	RPD	RPD Limit	Notes
Batch Z007309 - SW 3550B PCB										
Blank (Z007309-BLK1)				Prepared & Analyzed: 12/12/2016						
Aroclor 1016	U	0.0333	mg/Kg wet							
Aroclor 1221	U	0.0333	mg/Kg wet							
Aroclor 1232	U	0.0333	mg/Kg wet							
Aroclor 1242	U	0.0333	mg/Kg wet							
Aroclor 1248	U	0.0333	mg/Kg wet							
Aroclor 1254	U	0.0333	mg/Kg wet							
Aroclor 1260	U	0.0333	mg/Kg wet							
Surrogate: Decachlorobiphenyl	*0.0763*		*mg/Kg wet*	*0.066667*		*114*	*60-140*			
Surrogate: Tetrachloro-m-xylene	*0.0510*		*mg/Kg wet*	*0.066667*		*76*	*60-140*			
LCS (Z007309-BS1)				Prepared & Analyzed: 12/12/2016						
Aroclor 1016	0.118	0.0333	mg/Kg wet	0.16667		70	45-150			
Aroclor 1260	0.163	0.0333	mg/Kg wet	0.16667		98	45-150			
Surrogate: Decachlorobiphenyl	*0.0760*		*mg/Kg wet*	*0.066667*		*114*	*60-140*			
Surrogate: Tetrachloro-m-xylene	*0.0548*		*mg/Kg wet*	*0.066667*		*82*	*60-140*			

Prairie Analytical Systems, Inc. **Date:** 12/21/2016

LABORATORY RESULTS

Client: Hampton, Lenzini and Renwick, Inc.
Project: 16.0805 Alexander Lumber Co Oswego **Lab Order:** 16L0223

Metals by ICP-MS - Quality Control

Analyte	Result	Reporting Limit	Units	Spike Level	Source Result	%REC	%REC Limits	RPD	RPD Limit	Notes
Batch Z007272 - SW 3050B Metals										
Blank (Z007272-BLK1)				Prepared & Analyzed: 12/09/2016						
Mercury	U	0.0800	mg/Kg wet							
Selenium	U	0.500	mg/Kg wet							
Silver	U	0.500	mg/Kg wet							
LCS (Z007272-BS1)				Prepared & Analyzed: 12/09/2016						
Mercury	0.911	0.0800	mg/Kg wet	1.0000		91	80-120			
Selenium	24.6	0.500	mg/Kg wet	25.000		99	80-120			
Silver	2.40	0.500	mg/Kg wet	2.5000		96	80-120			
Matrix Spike (Z007272-MS1)		**Source: 16L0223-01**		Prepared & Analyzed: 12/09/2016						
Mercury	1.21	0.0951	mg/Kg dry	1.1886	0.108	93	75-125			
Selenium	31.3	0.594	mg/Kg dry	29.714	0.555	103	75-125			
Silver	2.59	0.594	mg/Kg dry	2.9714	ND	87	75-125			
Matrix Spike Dup (Z007272-MSD1)		**Source: 16L0223-01**		Prepared & Analyzed: 12/09/2016						
Mercury	1.40	0.0951	mg/Kg dry	1.1886	0.108	109	75-125	14	20	
Selenium	31.7	0.594	mg/Kg dry	29.714	0.555	105	75-125	1	20	
Silver	2.64	0.594	mg/Kg dry	2.9714	ND	89	75-125	2	20	
Batch Z007306 - SW 3050B Metals										
Blank (Z007306-BLK1)				Prepared & Analyzed: 12/12/2016						
Mercury	U	0.0800	mg/Kg wet							
Selenium	U	0.500	mg/Kg wet							
Silver	U	0.500	mg/Kg wet							
LCS (Z007306-BS1)				Prepared & Analyzed: 12/12/2016						
Mercury	0.960	0.0800	mg/Kg wet	1.0000		96	80-120			
Selenium	25.9	0.500	mg/Kg wet	25.000		104	80-120			
Silver	2.58	0.500	mg/Kg wet	2.5000		103	80-120			

Prairie Analytical Systems, Inc. **Date:** 12/21/2016

LABORATORY RESULTS

Client: Hampton, Lenzini and Renwick, Inc.
Project: 16.0805 Alexander Lumber Co Oswego **Lab Order:** 16L0223

Metals by ICP-MS - Quality Control

Analyte	Result	Reporting Limit	Units	Spike Level	Source Result	%REC	%REC Limits	RPD	RPD Limit	Notes
Batch Z007306 - SW 3050B Metals										
Matrix Spike (Z007306-MS1)		**Source: 16L0233-01**		Prepared: 12/12/2016 Analyzed: 12/13/2016						
Mercury	0.937	0.0899	mg/Kg dry	1.1236	ND	83	75-125			
Selenium	31.4	0.562	mg/Kg dry	28.090	0.226	111	75-125			
Silver	2.74	0.562	mg/Kg dry	2.8090	ND	97	75-125			
Matrix Spike Dup (Z007306-MSD1)		**Source: 16L0233-01**		Prepared: 12/12/2016 Analyzed: 12/13/2016						
Mercury	0.989	0.0899	mg/Kg dry	1.1236	ND	88	75-125	5	20	
Selenium	32.8	0.562	mg/Kg dry	28.090	0.226	116	75-125	4	20	
Silver	2.89	0.562	mg/Kg dry	2.8090	ND	103	75-125	6	20	

Prairie Analytical Systems, Inc. **Date:** 12/21/2016

LABORATORY RESULTS

Client: Hampton, Lenzini and Renwick, Inc.
Project: 16.0805 Alexander Lumber Co Oswego **Lab Order:** 16L0223

TCLP Metals by ICP-MS - Quality Control

Analyte	Result	Reporting Limit	Units	Spike Level	Source Result	%REC	%REC Limits	RPD	RPD Limit	Notes
Batch Z007543 - SW 3005A Metals										
Blank (Z007543-BLK1)				Prepared & Analyzed: 12/21/2016						
Mercury	U	0.000200	mg/L							
Blank (Z007543-BLK2)				Prepared & Analyzed: 12/21/2016						
Mercury	U	0.000600	mg/L							
LCS (Z007543-BS1)				Prepared & Analyzed: 12/21/2016						
Mercury	0.0179	0.000200	mg/L	0.020000		90	80-120			
Matrix Spike (Z007543-MS1)		**Source: 16L0457-01**		Prepared & Analyzed: 12/21/2016						
Mercury	0.0173	0.000600	mg/L	0.020000	ND	87	75-125			
Matrix Spike Dup (Z007543-MSD1)		**Source: 16L0457-01**		Prepared & Analyzed: 12/21/2016						
Mercury	0.0185	0.000600	mg/L	0.020000	ND	92	75-125	6	20	

Prairie Analytical Systems, Inc. **Date:** 12/21/2016

LABORATORY RESULTS

Client: Hampton, Lenzini and Renwick, Inc.
Project: 16.0805 Alexander Lumber Co Oswego **Lab Order:** 16L0223

Metals by ICP - Quality Control

Analyte	Result	Reporting Limit	Units	Spike Level	Source Result	%REC	%REC Limits	RPD	RPD Limit	Notes
Batch Z007271 - SW 3050B Metals										
Blank (Z007271-BLK1)				Prepared: 12/09/2016 Analyzed: 12/12/2016						
Arsenic	U	0.500	mg/Kg wet							
Barium	U	0.250	mg/Kg wet							
Cadmium	U	0.250	mg/Kg wet							
Chromium	U	0.250	mg/Kg wet							
Lead	U	0.250	mg/Kg wet							
LCS (Z007271-BS1)				Prepared: 12/09/2016 Analyzed: 12/12/2016						
Arsenic	27.2	0.500	mg/Kg wet	25.000		109	80-120			
Barium	27.5	0.250	mg/Kg wet	25.000		110	80-120			
Cadmium	27.4	0.250	mg/Kg wet	25.000		110	80-120			
Chromium	27.3	0.250	mg/Kg wet	25.000		109	80-120			
Lead	27.2	0.250	mg/Kg wet	25.000		109	80-120			
Matrix Spike (Z007271-MS1)	**Source: 16L0223-01**			Prepared: 12/09/2016 Analyzed: 12/12/2016						
Arsenic	36.1	0.594	mg/Kg dry	29.714	5.54	103	75-125			
Barium	118	0.297	mg/Kg dry	29.714	87.3	102	75-125			
Cadmium	28.2	0.297	mg/Kg dry	29.714	0.603	93	75-125			
Chromium	39.9	0.297	mg/Kg dry	29.714	10.2	100	75-125			
Lead	57.8	0.297	mg/Kg dry	29.714	32.7	84	75-125			
Matrix Spike Dup (Z007271-MSD1)	**Source: 16L0223-01**			Prepared: 12/09/2016 Analyzed: 12/12/2016						
Arsenic	35.9	0.594	mg/Kg dry	29.714	5.54	102	75-125	0.4	20	
Barium	104	0.297	mg/Kg dry	29.714	87.3	58	75-125	12	20	S
Cadmium	28.0	0.297	mg/Kg dry	29.714	0.603	92	75-125	0.9	20	
Chromium	39.6	0.297	mg/Kg dry	29.714	10.2	99	75-125	0.7	20	
Lead	57.3	0.297	mg/Kg dry	29.714	32.7	83	75-125	0.9	20	

Prairie Analytical Systems, Inc. **Date:** 12/21/2016

LABORATORY RESULTS

Client: Hampton, Lenzini and Renwick, Inc.
Project: 16.0805 Alexander Lumber Co Oswego **Lab Order:** 16L0223

Metals by ICP - Quality Control

Analyte	Result	Reporting Limit	Units	Spike Level	Source Result	%REC	%REC Limits	RPD	RPD Limit	Notes
Batch Z007303 - SW 3050B Metals										
Blank (Z007303-BLK1)				Prepared & Analyzed: 12/12/2016						
Arsenic	U	0.500	mg/Kg wet							
Barium	U	0.250	mg/Kg wet							
Cadmium	U	0.250	mg/Kg wet							
Chromium	U	0.250	mg/Kg wet							
Lead	U	0.250	mg/Kg wet							
LCS (Z007303-BS1)				Prepared & Analyzed: 12/12/2016						
Arsenic	25.8	0.500	mg/Kg wet	25.000		103	80-120			
Barium	26.3	0.250	mg/Kg wet	25.000		105	80-120			
Cadmium	25.8	0.250	mg/Kg wet	25.000		103	80-120			
Chromium	26.2	0.250	mg/Kg wet	25.000		105	80-120			
Lead	25.5	0.250	mg/Kg wet	25.000		102	80-120			
Matrix Spike (Z007303-MS1)	**Source: 16L0233-01**			Prepared & Analyzed: 12/12/2016						
Arsenic	32.8	0.562	mg/Kg dry	28.090	5.94	96	75-125			
Barium	49.9	0.281	mg/Kg dry	28.090	21.8	100	75-125			
Cadmium	25.2	0.281	mg/Kg dry	28.090	0.411	88	75-125			
Chromium	39.3	0.281	mg/Kg dry	28.090	11.8	98	75-125			
Lead	30.4	0.281	mg/Kg dry	28.090	5.72	88	75-125			
Matrix Spike Dup (Z007303-MSD1)	**Source: 16L0233-01**			Prepared & Analyzed: 12/12/2016						
Arsenic	32.8	0.562	mg/Kg dry	28.090	5.94	95	75-125	0.2	20	
Barium	52.4	0.281	mg/Kg dry	28.090	21.8	109	75-125	5	20	
Cadmium	25.1	0.281	mg/Kg dry	28.090	0.411	88	75-125	0.8	20	
Chromium	39.5	0.281	mg/Kg dry	28.090	11.8	99	75-125	0.5	20	
Lead	31.5	0.281	mg/Kg dry	28.090	5.72	92	75-125	3	20	

Prairie Analytical Systems, Inc. **Date:** 12/21/2016

LABORATORY RESULTS

Client: Hampton, Lenzini and Renwick, Inc.
Project: 16.0805 Alexander Lumber Co Oswego **Lab Order:** 16L0223

Conventional Chemistry Parameters - Quality Control

Analyte	Result	Reporting Limit	Units	Spike Level	Source Result	%REC	%REC Limits	RPD	RPD Limit	Notes
Batch Z007355 - ASTM D2974 Solids										
Blank (Z007355-BLK1)				Prepared: 12/13/2016 Analyzed: 12/14/2016						
Percent Solids	U	0.100	%							
Duplicate (Z007355-DUP1)		**Source: 16L0203-01**		Prepared: 12/13/2016 Analyzed: 12/14/2016						
Percent Solids	88.3	0.100	%		88.6			0.3	20	
Batch Z007357 - SW 9045C pH										
Duplicate (Z007357-DUP1)		**Source: 16L0223-02**		Prepared & Analyzed: 12/13/2016						
pH	8.3	0.010	pH Units		8.3			0.4	5	

LABORATORY RESULTS

Client: Hampton, Lenzini and Renwick, Inc.
Project: 16.0805 Alexander Lumber Co Oswego **Lab Order:** 16L0223

Notes and Definitions

S2	Surrogate recovery exceeds the acceptance criteria due to matrix interference, but there is no observable concentration in associated analyte(s).
S	Spike recovery outside acceptance limits.
R	RPD outside acceptance limits.
M	Reporting limit set between LOQ and MDL.
C1	Analyte result confirmed by second analysis.
*	NELAC certified compound.
U	Analyte not detected (i.e. less than RL or MDL).

Chain of Custody Record

Central IL - 1210 Capital Airport Drive - Springfield, IL 62707-8490 - Phone (217) 753-1148 - Facsimile (217) 753-1152
Chicago IL Office - 9114 Virginia Rd., Ste 112 - Lake in the Hills, IL 60156 - Phone (847) 651-2604 - Facsimile (847) 458-9680
Central/Southern IL Office - Phone (217) 414-7762 - Facsimile (217) 223-7922

Prairie Analytical Systems, INCORPORATED
www.prairieanalytical.com

Client	HAMPTON LENZINI & RENWICK
Address	380 SHEPARD DRIVE
City, State, Zip Code	ELGIN IL 60123
Phone / Facsimile	847 697 6700
Project Name / Number	16.0805 ALEXANDER LUMBER CO
Project Location	59 S ADAMS ST OSWEGO, IL
P.O. # or Invoice To	16.0805
Contact Person	KAREN KASE

Analysis and/or Method Requested: VOC, SEMI-VOC, METALS, PCBs, PAHs

Reporting: TACO ☐ Resid ☐ Ind/Comm; CALM ☐ A ☐ B ☐ C ☐ D ☐ E ☐ F; RISC ☐ Resid ☐ Indust

Sample Description	Sampling Date	Sampling Time	Matrix Code	Preserv Code	No. of Containers	Sample Type Comp	Sample Type Grab	VOC, SEMI-VOC, METALS, PCBs, PAHs	Sampler Comments
B-01, 3.5'	12.7.16	10:10 AM	S	5/0	6		X	X	
B-02, 5.1'	12.7.16	9:30 AM	S	5/0	6		X	X	
B-03, 5.0'	12.7.16	11:45 AM	S	5/0	6		X	X	
B-04, 3.0'	12.7.16	9:15 AM	S	5/0	6		X	X	
B-05, 6.0'	12.7.16	8:45 AM	S	5/0	6		X	X	
B-06, 3.0'	12.7.16	11:15 AM	S	5/0	6		X	X	
B-07, 3.0'	12.7.16	11:00 AM	S	5/0	6		X	X	

Matrix Code	A - Aqueous	DW - Drinking Water	GW - Ground Water	NA - Non-Aqueous Liquid	S - Solid	O - Oil	X - Other (Specify)
Preserv Code	0 - None	1 - HCl	2 - H2SO4	3 - HNO3	4 - NaOH	5 - 5035 Kit	X - Other (Specify)

Relinquished By	Date	Time	Received By	Date	Time	Method of Shipment
[signature]	12.7.2016	1355	[signature]	12/7/16	1355	
[signature]	12/7/16	1700				
			[signature]	12/8/16	950	UPS

Special Instructions: Metals = RCRA 8

Turnaround Time: Standard ☑ Rush ☐
Date Required:

QC Level: 1 ☑ 2 ☐ 3 ☐ 4 ☐

On wet ice? Yes ☑ No

Temperature (°C): 2.4

Copies: White - Client / Yellow - PAS, Inc. / Pink - Sampler

Kristen Potter

From: Karen Kase <kkase@hlreng.com>
Sent: Monday, December 19, 2016 12:39 PM
To: Kristen Potter
Subject: Re: Report 16L0223

Hi Kristen,
Can you please run samples 1 and 3 for TCLP mercury since they came back high?
Thank you,
Karen

Karen Kase, PWS, CPESC
Natural Resources Manager
Hampton Lenzini and Renwick Inc.
380 Shepard Drive
Elgin, IL 60123
P 847.697.6700
www.hlrengineering.com
"Full service engineering at a higher standard"

On Mon, Dec 19, 2016 at 10:28 AM, Kristen Potter <potterk@prairieanalytical.com> wrote:

> Karen,
>
> Please contact me with any questions.
>
> Thank you and have a great holiday!
>
> **Kristen Potter**
>
> **We are closed on Monday December 26th and Monday January 2nd. Please plan sample drop offs, pick ups and other requests accordingly.**

THANK YOU and HAPPY HOLIDAYS.

A **W/DBE** Certified Company
1210 Capital Airport Drive I Springfield, IL 62707
ph: 217-753-1148 I fax: 217-753-1152 I www.prairieanalytical.com

Please consider the environment.

CONFIDENTIALITY NOTICE: The information contained in and transmitted with this message is or may be attorney-client privileged, attorney work product, or otherwise confidential and is intended only for the individual or entity named above. You are hereby notified that any dissemination, distribution, copying or other use of this communication by or to anyone other than the recipient named above is unauthorized and strictly prohibited. If you have received this message in error, please notify the sender by return email immediately and delete this message.

December 16, 2016

Michelle Lipinski
Rubino Engineering, Inc.
665 Tollgate Road, Unit H
Elgin, Illinois 60123

Re: Environmental Services Agreement, Potential Property Acquisition
59 South Adams Street; Oswego, Illinois

Dear Ms. Lipinski:

This letter report summarizes the findings of a wetland screening conducted for the potential property acquisition at 59 South Adams Street. The property consists of two parcels in Oswego, Kendall County, Illinois. The north parcel is the northeast corner of Harrison Street and Jackson Street, and the south parcel is the northeast corner of Harrison Street and Washington Street. The site is located in Section 17, Township 37 North, Range 8 East of the Third Principal Meridian.

1. WETLAND SCREENING METHODOLOGY

A wetland screening consists of reviewing available wetland mapping sources for the project site and conducting a field site visit to evaluate areas that may exhibit wetland characteristics. To be considered a wetland, an area must meet all three wetland criteria, including the presence of hydrophytic vegetation, hydric soils, and wetland hydrology. During the field site visit, a visual screening of hydrophytic vegetation and hydrology is evaluated for the project site. The results of the wetland screening will either be that the site does not contain wetlands or a determination will be made that potential wetlands may exist on the project site. If potential wetlands are noted on the site, then a formal wetland delineation is recommended to determine wetland boundaries.

2. WETLAND MAP REVIEW

The following maps were reviewed for the project site and are included as figures in this letter report:

Figure 1– Project Location Map
Figure 2– United States Geological Survey (USGS) Topographic Map
Figure 3– United States Department of Agriculture (USDA) Soil Survey Map
Figure 4– United States Fish and Wildlife Service (USFWS) National Wetlands Inventory Map
Figure 5– Federal Emergency Management Agency (FEMA) Flood Insurance Rate Map

These sources provide an indication if wetlands may occur on a site. Some of these map sources are based on aerial photographs that have not been ortho-corrected and should only be used as a guidance tool. A field investigation is required to assess actual conditions on the site.

The USGS Topographic Map, included as Figure 2, does not identify wetlands or other water bodies within the project area.

The USDA Soil Survey, included as Figure 3, shows the following soil mapping units within the project area:

- Ripon silt loam, 5 to 10 percent slopes, eroded (324C2)
- Millington silt loam, 0 to 2 percent slopes, occasionally flooded (8082A)

Ripon silt loam is not considered a hydric soil in Kendall County. Millington silt loam is considered hydric in Kendall County.

The National Wetlands Inventory Map, included as Figure 4, identifies the northeast corner of the north parcel as PFO1A wetland. PFO1A indicates the area is a palustrine (fresh water), broad-leaved deciduous forested wetland which is temporarily flooded.

The FEMA Flood Insurance Rate Map, included as Figure 5, depicts the northeast corner of the north parcel as Zone AE floodway. The floodway is a channel of a stream plus any adjacent areas that must be kept free of encroachment so that the 1% annual chance flood can be carried without substantial increases in flood heights. It also identifies the west edge of the south parcel as a Zone X Flood Area. This classification is assigned to areas of 0.2% annual chance flood.

3. WETLAND SCREENING FIELD INVESTIGATION

Hampton, Lenzini, and Renwick, Inc. (HLR) conducted a field investigation for potential wetlands on December 7, 2016 within and adjacent to the subject property. The investigation was conducted by Karen Kase, PWS, and Jeanne Duffy. The north parcel consists of a vacant lot which is primarily gravel. There are small areas of topsoil along the north, east, and west edges. These areas do not appear landscaped or maintained, but do have sparse volunteer vegetation. There is a bike path between the north side of the property and Waubonsie Creek. The south parcel consists of a vacant lot which is entirely gravel. The south edge of the property is served by a drainage ditch which appears to tie into a city storm sewer system. The footprint of the former building is a much higher grade than the rest of the site. The Fox River lies approximately 350 feet to the west of the site, on the other side of Hudson Crossing Park. No wetlands or Waters of the U.S. were identified within the project limits. Representative site photographs are provided in the attached Photograph Log.

4. CONCLUSION AND REGULATORY INFORMATION

No wetlands or other environmentally sensitive areas are located within the project. If disturbance for future development of this property is one acre or greater, then a National Pollutant Discharge Elimination System (NPDES) permit from the Illinois Environmental Protection Agency will be required.

If you should have any questions regarding this information, please do not hesitate to contact me.

Yours truly,
HAMPTON, LENZINI AND RENWICK, INC.

By:

Karen Kase, PWS
Natural Resources Manager

Legend

Approximate Project Location

Figure 1

Alexander Lumber Company

Location Map/Aerial Photograph

Scale: NTS

Hampton, Lenzini and Renwick, inc.
Civil & Structural Engineers . Land Surveyors . Environmental Services
ELGIN . SPRINGFIELD . WOODRIDGE
www.hlrengineering.com

N

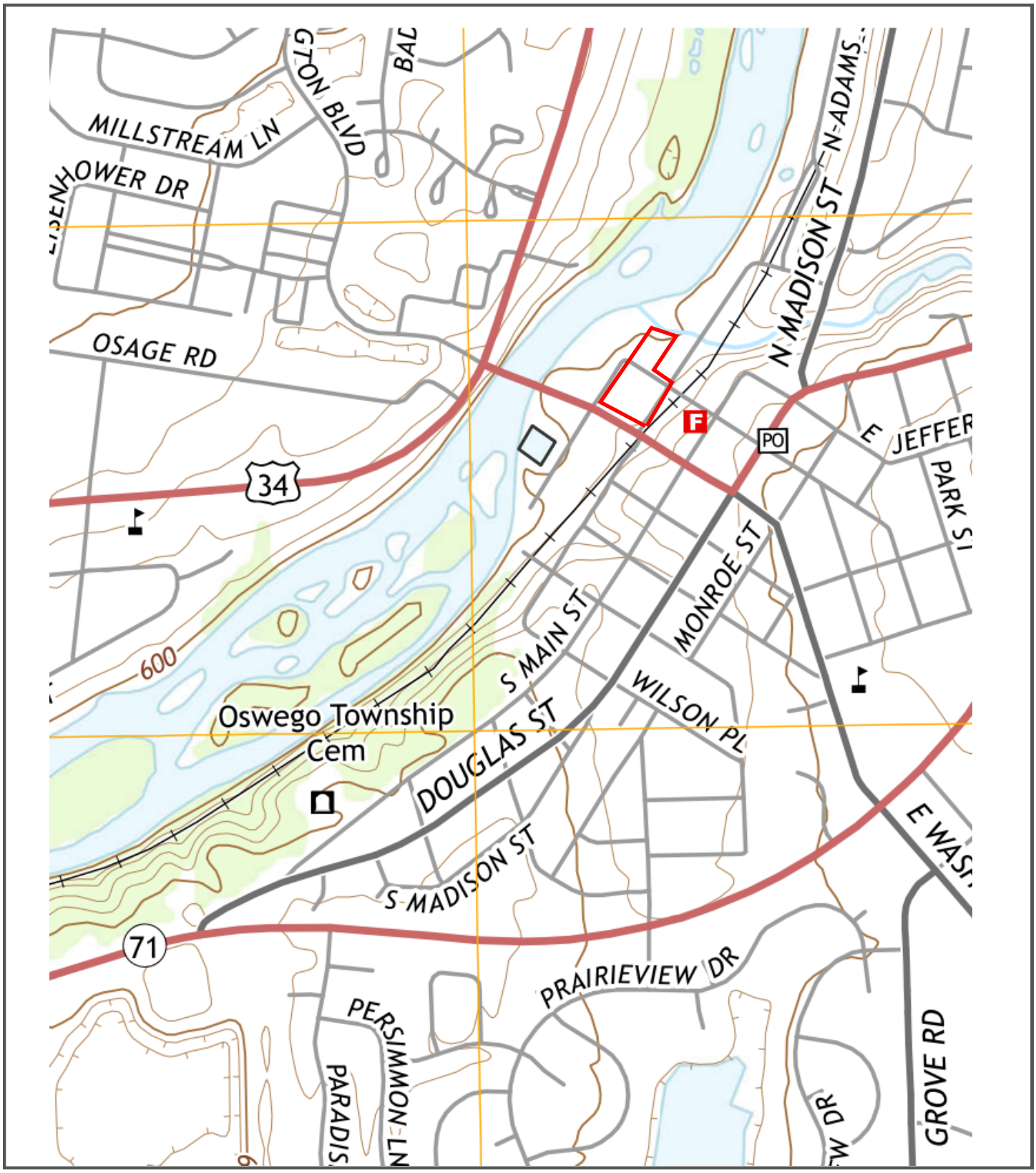

Legend

Approximate Project Location

Figure 2

Alexander Lumber Company

USGS Topographic Map

Aurora South Quadrangle

Scale: NTS

Hampton, Lenzini and Renwick, inc.
Civil & Structural Engineers . Land Surveyors . Environmental Services
ELGIN . SPRINGFIELD . WOODRIDGE
www.hlrengineering.com

N

Legend	
Approximate Project Location	
324C2	Ripon silt loam, 5 to 10 percent slopes, eroded
8082A	Millington silt loam, 0 to 2 percent slopes, occasionally flooded

Figure 3
Alexander Lumber Company
USDA Soil Survey Map
Scale: NTS

Hampton, Lenzini and Renwick, inc.
Civil & Structural Engineers . Land Surveyors . Environmental Services
ELGIN . SPRINGFIELD . WOODRIDGE
www.hlrengineering.com

N

Legend

Approximate Project Location

- Estuarine and Marine Deepwater
- Estuarine and Marine Wetland
- Freshwater Emergent Wetland
- Freshwater Forested/Shrub Wetland
- Freshwater Pond
- Lake
- Other
- Riverine

Figure 4

Alexander Lumber Company

National Wetlands Inventory Map

Scale: NTS

Hampton, Lenzini and Renwick, inc.
Civil & Structural Engineers . Land Surveyors . Environmental Services
ELGIN . SPRINGFIELD . WOODRIDGE
www.hlrengineering.com

N

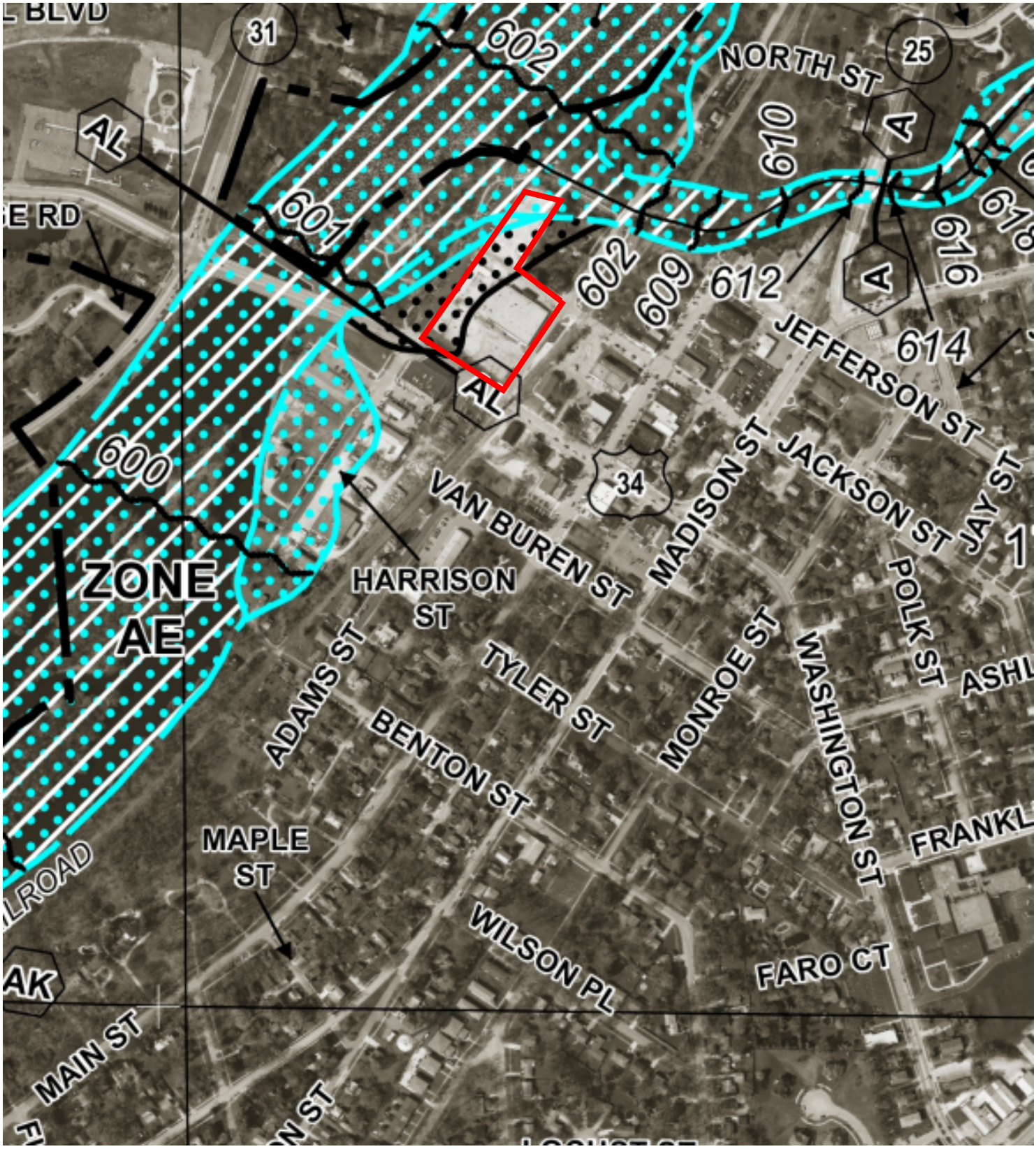

Legend

Approximate Project Location

FLOODWAY AREAS IN ZONE AE

The floodway is the channel of a stream plus any adjacent floodplain areas that must be kept free of encroachment so that the 1% annual chance flood can be carried without substantial increases in flood heights.

OTHER FLOOD AREAS

ZONE X Areas of 0.2% annual chance flood; areas of 1% annual chance flood with average depths of less than 1 foot or with drainage areas less than 1 square mile; and areas protected by levees from 1% annual chance flood.

Figure 5

Alexander Lumber Company

FEMA Flood Insurance Rate Map

Scale: NTS

Hampton, Lenzini and Renwick, inc.
Civil & Structural Engineers . Land Surveyors . Environmental Services
ELGIN . SPRINGFIELD . WOODRIDGE
www.hlrengineering.com

N

REPORT TRANSMITTAL

October 29, 2018

To: Dale V. Marting, P.E., CFM, CSM
Sr. Project Engineer
O: 630.587.0470 | M: 224.209.3777
40W201 Wasco Road, Suite D St.
Charles, IL 60175

Re: **Geotechnical Engineering Services Report**
Proposed Reserve at Hudson Crossing
Oswego, Illinois

Rubino Report No. G18.129

Via email: d.marting@trotter-inc.com

Dear Mr. Marting,

Rubino Engineering, Inc. (Rubino) is pleased to submit our Geotechnical Engineering Services Report for the proposed design plans and lift station in Oswego, Illinois.

Report Description

Enclosed is the Geotechnical Services Report including results of field and laboratory testing, bedrock depth, as well as recommendations for utility trench boxes.

Authorization and Correspondence History

- Rubino Proposal No. Q18.439g REV 1 dated September 25, 2018; Signed and authorized by Dale Marting on September 25, 2018.

Closing

Rubino appreciates the opportunity to provide geotechnical services for this project and we look forward to continued participation during the design and in future construction phases of this project.

If you have questions pertaining to this report, or if Rubino may be of further service, please contact our office at (847) 931-1555.

Respectfully submitted,
RUBINO ENGINEERING, INC.

Michelle A. Lipinski, PE
President

michelle.lipinski@rubinoeng.com

MAL/file/ Enclosures

PROPOSED RESERVE

AT HUDSON CROSSING

OSWEGO, ILLINOIS

RUBINO PROJECT NO. G18.129

Geotechnical Engineering Services Report

Drilling
Laboratory Testing
Geotechnical Analysis

PREPARED BY:

rubino ENGINEERING INC.

Michelle A. Lipinski, PE
President
IL No. 062-061241, Exp. 11/30/19

PREPARED FOR:

TROTTER & ASSOCIATES, INC.

40W201 WASCO ROAD SUITE D

ST. CHARLES, ILLINOIS

OCTOBER 29, 2018

TABLE OF CONTENTS

PROJECT INFORMATION ..... - 1 -
PURPOSE / SCOPE OF SERVICES ..... - 1 -
Table 1: Drilling Scope ..... - 1 -
DRILLING, FIELD, AND LABORATORY TEST PROCEDURES ..... - 2 -
EXECUTIVE SUMMARY OF GEOTECHNICAL CONSIDERATIONS ..... - 2 -
SITE AND SUBSURFACE CONDITIONS ..... - 3 -
SITE LOCATION AND DESCRIPTION ..... - 3 -
SURFACE CONDITIONS ..... - 4 -
Table 2: Existing Pavement Section Summary ..... - 4 -
SUBSURFACE CONDITIONS ..... - 4 -
Table 3: Subsurface Conditions Summary ..... - 4 -
GROUNDWATER CONDITIONS ..... - 5 -
Table 4: Groundwater Observation Summary ..... - 5 -
BEDROCK DEPTH ..... - 5 -
Table 5: Bedrock Observation Summary ..... - 5 -
EVALUATION AND RECOMMENDATIONS ..... - 6 -
TOPSOIL DISCUSSION ..... - 6 -
ORGANIC SOILS DISCUSSION ..... - 7 -
Table 6: Organic Content by Location ..... - 7 -
DEWATERING RECOMMENDATIONS ..... - 7 -
UTILITY BEARING AND BACKFILL RECOMMENDATIONS ..... - 7 -
Table 8: Utility Bearing Considerations and Recomendations ..... - 7 -
UTILITY INSTALLATION CONSIDERATIONS ..... - 9 -
Table 7: Geotechnical Considerations for Utility installation ..... - 9 -
TRENCH EXCAVATION RECOMMENDATIONS ..... - 9 -
TRENCH BOX LATERAL EARTH PRESSURE RECOMMENDATIONS ..... - 9 -
Table: "K-Factor" Lateral Earth Pressures ..... - 10 -
Equivalent Fluid Pressure ..... - 11 -
CLOSING ..... - 11 -

APPENDIX A - DRILLING, FIELD, AND LABORATORY TEST PROCEDURES
APPENDIX B - REPORT LIMITATIONS
APPENDIX C - SOIL CLASSIFICATION GENERAL NOTES
APPENDIX D – SOIL CLASSIFICATION CHART
APPENDIX E – SITE VICINITY MAP BORING LOCATION PLAN
APPENDIX F – BORING LOGS
APPENDIX G – LABORATORY REPORTS

PROJECT INFORMATION

Rubino Engineering, Inc. (Rubino) understands that Trotter and Associates is planning the site civil utility design plans including a proposed lift station for the proposed reserve at Hudson Crossing in Oswego, Illinois.

Documents received:

- Proposed boring location plan
- "The Reserve at Hudson Crossing" – prepared by Trotter & Associates Inc. dated October 5, 2018

Project Correspondence:

- RFP Email from Dale Marting on September 20, 2018
- Authorization to proceed September 25, 2018

The geotechnical recommendations presented in this report are based on the available project information and the subsurface materials described in this report. If any of the information on which this report is based is incorrect, please inform Rubino in writing so that we may amend the recommendations presented in this report (if appropriate, and if desired by the client). Rubino will not be responsible for the implementation of our recommendations if we are not notified of changes in the project.

Purpose / Scope of Services

The purpose of this study was to explore the subsurface conditions at the site in order to prepare geotechnical recommendations for trench boxing, and bedrock depths for the proposed construction. Rubino's scope of services included the following drilling program:

Table 1: Drilling Scope

NUMBER OF BORINGS	DEPTH (FEET BEG*)	LOCATION
4	15**	S Adams Street and S Harrison Street
1	30**	Southwest corner of W Washington Street and S Harrison Street

*BEG = below existing grade
** Borings were extended to auger refusal

Representative soil samples obtained during the field exploration program were transported to the laboratory for additional classification and laboratory testing.

This report briefly outlines the following:

- *Summary of client-provided project information and report basis*
- *Overview of encountered subsurface conditions*

- *Overview of field and laboratory tests performed including results*
- *Geotechnical recommendations pertaining to:*
  - *Depth to apparent bedrock (auger and spoon refusal)*
  - *Lateral Earth pressures for utility trench boxes*
- *Construction considerations, including temporary excavation and construction control of water*

DRILLING, FIELD, AND LABORATORY TEST PROCEDURES

Trotter and Associates selected the number of borings and the boring depths. Trotter and Associates located the borings in the field by measuring distances from known fixed site features. The borings were advanced utilizing 3 ¼ inch inside-diameter, hollow stem auger drilling methods and soil samples were routinely obtained during the drilling process.

Selected soil samples were tested in the laboratory to determine material properties for this report. Drilling, sampling, and laboratory tests were accomplished in general accordance with ASTM procedures. The following items are further described in the Appendix of this report.

- *Field Penetration Tests and Split-Barrel Sampling of Soils (ASTM D1586)*
- *Field Water Level Measurements*
- *Laboratory Determination of Water (Moisture) Content of Soil by Mass (ASTM D2216)*
- *Laboratory Organic Content by Loss on Ignition (ASTM D2974)*

The laboratory testing program was conducted in general accordance with applicable ASTM specifications. The results of these tests are to be found on the accompanying boring logs located in the Appendix.

EXECUTIVE SUMMARY OF GEOTECHNICAL CONSIDERATIONS

The main geotechnical design and construction considerations at this site are:

- **Subgrade soils** generally consisted of soft to medium stiff brown silty clay underlain by soft, greenish gray sandy silt to silty clay. Loose, gravelly sand was found near the bottom of one of the borings. See *Subsurface Conditions* section for more detailed information.
  - **Auger refusal** was encountered at every boring location before the proposed depths from a range of 4 ¼ to 11 ¾ feet BEG.
- **Internally Braced Trench boxes** will be needed to support the areas where soils with low blow counts and/or high moisture contents or loose saturated granular materials encountered within the borings. See the *Trench Excavation Recommendations* sections for more information.

The geotechnical-related recommendations in this report are presented based on the subsurface

conditions encountered and Rubino's understanding of the project. Should changes in the project criteria occur, a review must be made by Rubino to determine if modifications to our recommendations will be necessary.

SITE AND SUBSURFACE CONDITIONS

Site Location and Description

The site is located in northeast Kendall County within historic downtown Oswego, immediately east of the Fox River. The Fox River's headwaters begin in southern Wisconsin and flows southward eventually feeding into the Illinois River in Ottawa, Illinois. The site elevation gently slopes westward towards the Fox. The site spans from Adams Street west to Harrison Street along W Washington Street.

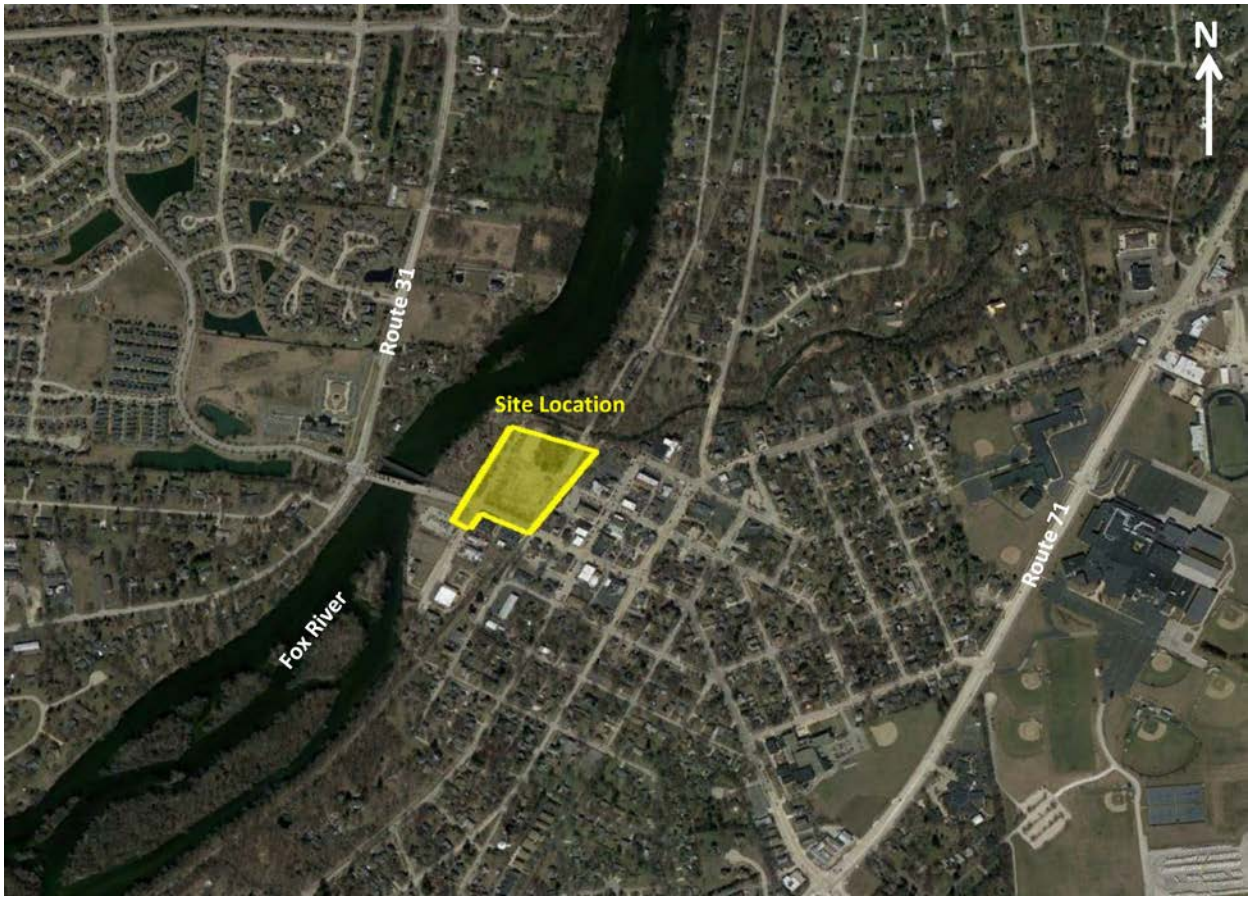

The site has an approximate latitude and longitude of 41.684538°and -88.353954°, respectively.

Surface Conditions

Borings that were taken within existing paved areas had the following surficial profile:

Table 2: Existing Pavement Section Summary

LOCATION / BORING #	TOTAL OBSERVED PAVEMENT THICKNESS (IN)	TOTAL OBSERVED BASE STONE THICKNESS (IN)
B-01	3 ½ INCHES ASPHALT	8 ½ INCHES GRAVEL BASE
B-02	7 INCHES ASPHALT	13 INCHES GRAVEL BASE
B-03	4 INCHES ASPHALT	20 INCHES GRAVEL BASE
B-04	4 INCHES ASPHALT	8 INCHES GRAVEL BASE

The above referenced thicknesses are considered approximate and based on visual classifications. Pavement and sub-base type and thickness may vary between core locations.

Subsurface Conditions

Beneath the existing surficial pavement, undocumented fill soils, or gravel, subsurface conditions generally consisted of brown, black, and/or gray silty clay, brown and gray clayey silt, and brown silty sand.

- **Topsoil** thickness at B-05 was found to be approximately 4 inches
- The native **silty clay** soils were generally soft to very stiff in consistency
- The **granular** soils were generally loose in apparent density

Table 3: Subsurface Conditions Summary

DEPTH RANGE (FEET BEG*)	SOIL DESCRIPTION	SPT N-VALUES (BLOWS PER FOOT)	MOISTURE CONTENT (%)	ESTIMATED SHEAR STRENGTH
Harrison and Adams Street (B-01 through B-05)				
1 – 8 ½	Black / brown silty CLAY	2 – 7	17 – 30	c = 300 – 900 psf
6 – 7 ½	Loose, gravelly SAND (B-04)	7	18	ϕ = 26° - 28°
6 – 11	Soft, greenish-gray to brown sandy SILT (B-05)	2	21 – 24	ϕ = 24° - 25°

*BEG = Below existing grade

The native soils were visually classified as silty clay (CL), sand (SW), and sandy silt (ML) according to the Unified Soil Classification System (USCS). The above table is a general summary of subsurface conditions. Please refer to the boring logs for more detailed information.

Estimated shear strength of clay soils is based on empirical correlations using N-values, moisture content, and unconfined compressive strength.

Groundwater Conditions

Groundwater was encountered in some of the borings during drilling operations. The following table summarizes groundwater observations from the field:

Table 4: Groundwater Observation Summary

BORING NUMBER	GROUNDWATER LEVEL DURING DRILLING (FEET*)	GROUNDWATER LEVEL UPON AUGER REMOVAL (FEET*)
B-03	6	3 ½
B-04	8 ¼	3 ½
B-05	10	8 ½

*BEG = Below existing grade

It should be noted that fluctuations in the groundwater level should be anticipated throughout the year depending on variations in climatological conditions and other factors not apparent at the time the borings were performed. Groundwater may not have been observed in some areas due to the low permeability of soils. Additionally, discontinuous zones of perched water may exist within the soils. The possibility of groundwater level fluctuation should be considered when developing the design and construction plans for the project.

Bedrock Depth

Bedrock was encountered in all the borings during drilling operations. The following table summarized bedrock depths from in the field.

Table 5: Bedrock Observation Summary

BORING NUMBER	BEDROCK DEPTH DURING DRILLING (FEET BELOW EXISTING GRADE)
B-01	4 ¼
B-02	5
B-03	8 ¼
B-04	8 ½
B-05	11 ¾

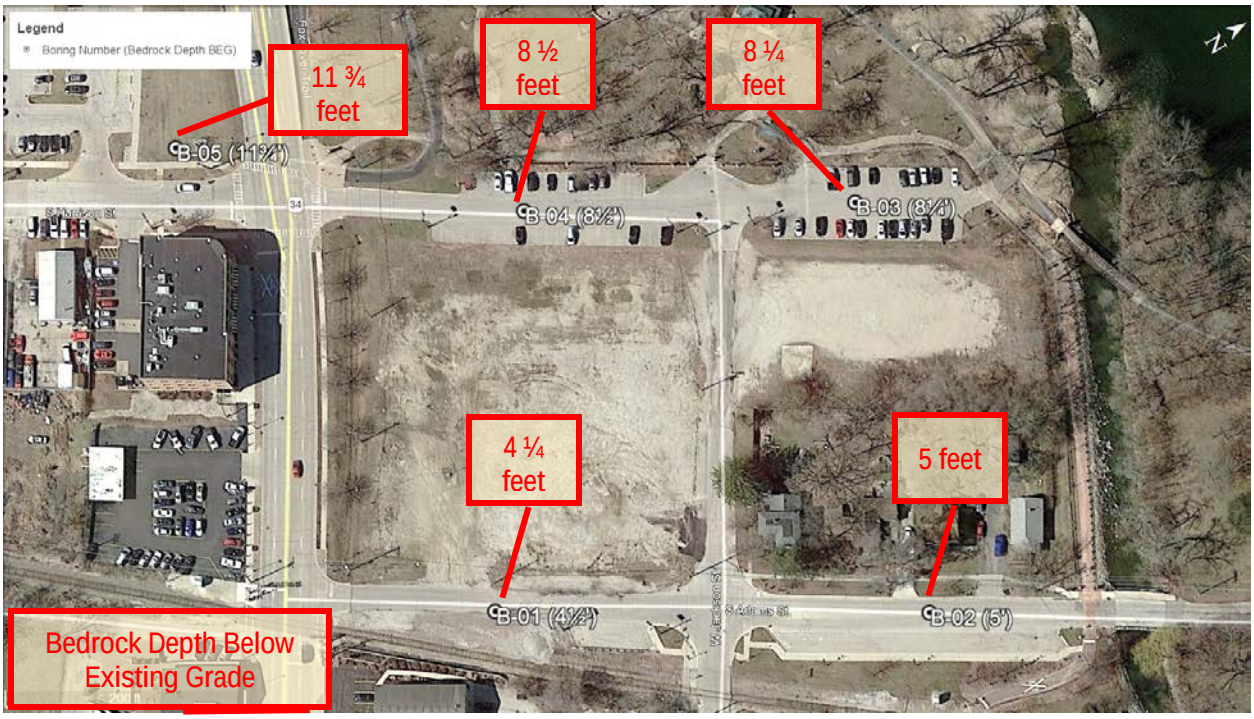

EVALUATION AND RECOMMENDATIONS

The geotechnical-related recommendations in this report are presented based on the subsurface conditions encountered and Rubino's understanding of the project. Should changes in the project criteria occur, a review must be made by Rubino to determine if modifications to our recommendations will be necessary.

Topsoil Discussion

Topsoil materials as described in this report have not been analyzed for quality according to any minimum specifications. If topsoil is to be imported to or exported from this site, Rubino recommends that it meet the minimum specifications defined in **Section 1081.05** of the, "Standard Specifications for Road and Bridge Construction," adopted by the Illinois Department of Transportation, April 1st, 2016.

Rubino has reported topsoil thicknesses at each boring based on visual observation of surficial soils. Topsoil thickness at B-05 site was found to be approximately 5 inches.

Organic Soils Discussion

Organic soils were not observed within some of the borings during the drilling operations; however there is a possibility that organic soils could be encountered at other locations on the site.

Organic soils can later cause settlement or stability problems. If encountered during construction, Rubino recommends that organic soils be removed and replaced with a compacted and documented engineered fill.

Organic soils are defined as soils containing greater than 10% organic matter, typically consisting of decomposed plant material accumulated under conditions of excessive moisture. Organic soils are dark colored in nature and may exhibit the odor of decaying vegetation.

Table 6: Organic Content by Location

Boring Number	Address/Location	Organic Loss on Ignition LOI%
B-03	Harrison Street	7%

Dewatering Recommendations

Dewatering may be necessary during excavation of saturated soils due to the presence of sand seams or other conditions not apparent at the time of drilling. Shoring or trench boxes may be required where the soils are saturated or have low shear strengths. Please reference the anticipated groundwater levels on the attached boring logs and in the *Groundwater Conditions* section of this report.

Utility Bearing and Backfill Recommendations

Rubino anticipates that the proposed manhole and pipe inverts will be bearing between approximately 3 and 5 feet below existing grade. Rubino has outlined some geotechnical considerations at each boring location.

Table 8: Utility Bearing Considerations and Recomendations

LOCATION	UTILITY BEARING CONSIDERATIONS
B-01 and B-02	Shallow bedrock present, may need to be removed
B-03 and B-04	Soft clay present; increase bedding layer thickness to at least 18 inches; shallow groundwater

LOCATION	UTILITY BEARING CONSIDERATIONS
B-05	Loose silt starting at approximately 6 feet BEG; shallow groundwater present.

Rubino recommends that the sewer be supported by a granular bedding material similar to the gradation of an IDOT CA-07 stone. The thickness of the bedding material should be at least 12 inches.

If granular material is used for the backfill of the utility trench, the **granular material should have a gradation that will filter protect the backfill material from the adjacent soils**. If this gradation is not available, a geosynthetic non-woven filter fabric should be used to reduce the potential for the migration of fines into the backfill material. Granular backfill material shall be compacted to meet the above compaction criteria.

Structural fill placed inutility trenches shall be evaluated in accordance with the following table:

MATERIAL TESTED	PROCTOR TYPE*-1	MIN % DRY DENSITY	PLACEMENT MOISTURE CONTENT RANGE	FREQUENCY OF TESTING*-2	MAXIMUM LOOSE LIFT HEIGHT
Utility Trench Backfill	Standard	95%	-2 to +2 %	1 per 200 LF of fill placed	4 – 6 inches

*-1 The test frequency for the laboratory reference shall be one laboratory Proctor test for each material used on the site. If the borrow or source of fill material changes, a new reference moisture/density test should be performed.

*-2A minimum of one test per lift is recommended unless otherwise specified.

<u>In general, utility trench backfill materials should:</u>

- Have a Standard Proctor maximum dry density greater than 100 pcf
- Be free of organic or other deleterious materials
- Have a maximum particle size no greater than 3 inches
- Each lift of compacted, engineered fill should be tested and documented by a representative of the geotechnical engineer prior to placement of subsequent lifts
- Soils classified as GP, GW, SP, and SW will generally be suitable for use as utility trench backfill.
- Soils classified as CL, ML, SC, SM, OL, OH, MH, CH and PT should be considered unsuitable.
- If water must be added, it should be uniformly applied and thoroughly mixed into the soil

Tested fill materials that do not achieve either the required dry density or moisture content range shall be recorded, the location noted, and reported to the Contractor and Owner. A re-test of that area should be performed after the Contractor performs remedial measures. The above test frequencies should be discussed with the contractor prior to starting the work.

The geotechnical engineer of record can only certify work that was performed under their direct observation, or under the observation of a competent person under their specific direction.

Utility Installation Considerations

The following geotechnical considerations should be taken into account when considering either trenching or trenchless techniques performed as part of this project:

Table 7: Geotechnical Considerations for Utility installation

LOCATION	DEPTH RANGE (FEET BEG*)	SOIL CONSIDERATIONS
B-01 to B-05	1 – 11	Saturated soils, potentially collapsible fine-grained soils and granular soils that may not be self-supporting

*BEG = below existing grade

Please note, trench boxes may be needed at other locations or depths for this project. If trench boxes will be used throughout the installation of the utility, lateral earth pressures should be considered for the excavations.

During construction, Rubino recommends that one of our representatives be onsite for typical **observations and documentation** of exposed subgrade for and testing of utility trench backfill.

Trench Excavation Recommendations

Excavation for trenches shall be performed in accordance with OSHA regulations as stated in 29 CFR Part 1926. According to the classifications methods of soils by this method, Rubino expects that the soils located at the proposed utility improvement areas would classify as a range of Type A, B, and C soils. If trench boxes will be used throughout the installation of the utilities, lateral earth pressures should be considered for the excavations.

Trench Box Lateral Earth Pressure Recommendations

Lateral earth pressures will be influenced by the conditions of wall or support restraint, methods of construction and/or compaction and the strength of the materials being restrained.

Lateral earth pressure is developed from the soils present within a wedge formed by the vertical below-grade trench box side and an imaginary line extending up and away from the bottom of the wall at an approximate 45° angle.

The lateral earth pressures are determined by multiplying the vertical applied pressure by the appropriate lateral earth pressure coefficient K. Rubino recommends designing the bracing for

the temporary excavation for the proposed sewer replacement for the "at-rest" lateral earth pressure condition using K_o.

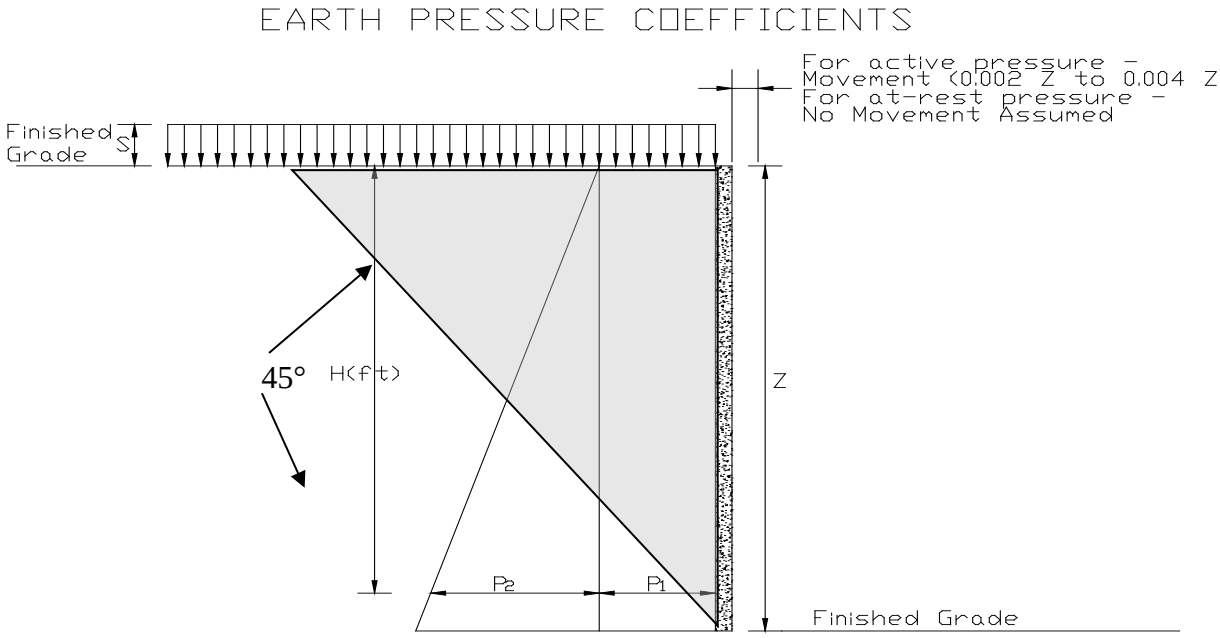

The following table provides the recommended "at-rest" lateral earth pressure coefficients for the soils encountered. Also included are the "active" and "passive" lateral earth pressure coefficients if needed.

Table: "K-Factor" Lateral Earth Pressures

DEPTH (FT.)	SOIL TYPE	ESTIMATED TOTAL UNIT WEIGHT (LB/FT^3)	FRICTION ANGLE (DEG)	K_O	K_A	K_P
1 – 8 ½	Soft to very stiff, black to brown silty CLAY	115 – 130	28°	0.53	0.36	2.77
6 – 7 ½ (B-04)	Loose, gravelly SAND	110 – 115	28°	0.53	0.36	2.77
6 – 11 (B-05)	Soft, greenish-gray to brown sandy SILT, trace organics	115 – 120	28°	0.53	0.36	2.77

Conditions applicable to the above coefficients include:

- For active earth pressure, wall must rotate about base, with top lateral movements 0.002Z to 0.004Z, where Z is the wall height
- For passive earth pressure, wall must move horizontally to mobilize resistance
- Uniform surcharge, where S is surcharge pressure

- Hydrostatic Pressure designed to elevations as recommended herein
- No safety factor included
- The minimum factor of safety for overturning analysis is 1.5

Equivalent Fluid Pressure

Please refer to the following bullet points as they pertain to equivalent fluid pressure.

- An "equivalent fluid" pressure can be obtained from the above chart by multiplying the appropriate K-factor times the total unit weight of the stone fill. This applies to unsaturated conditions only.

- If a saturated "equivalent fluid" pressure is needed, the effective unit weight (total unit weight minus unit weight of water) should be multiplied times the appropriate K-factor and the unit weight of water added to that resultant.

CLOSING

The recommendations submitted are based on the available subsurface information obtained by Rubino Engineering, Inc. and design details furnished by Trotter & Associates, Inc. for the proposed project. If there are any revisions to the plans for this project or if deviations from the subsurface conditions noted in this report are encountered during construction, Rubino should be notified immediately to determine if changes in the foundation recommendations are required. If Rubino is not retained to perform these functions, we will not be responsible for the impact of those conditions on the project.

The scope of services did not include an environmental assessment to determine the presence or absence of wetlands, or hazardous or toxic materials in the soil, bedrock, surface water, groundwater or air, on, or below or around this site. Any statements in this report and/or on the boring logs regarding odors, colors, and/or unusual or suspicious items or conditions are strictly for informational purposes.

After the plans and specifications are more complete, the geotechnical engineer should be retained and provided the opportunity to review the final design plans and specifications to check that our engineering recommendations have been properly incorporated into the design documents. At this time, it may be necessary to submit supplementary recommendations. This report has been prepared for the exclusive use of Trotter & Associates, Inc. and their consultants for the specific application to the proposed Reserve at Hudson Crossing in Oswego, Illinois.

APPENDIX A - DRILLING, FIELD, AND LABORATORY TEST PROCEDURES

ASTM D1586 Penetration Tests and Split-Barrel Sampling of Soils

During the sampling procedure, Standard Penetration Tests (SPT's) were performed at regular intervals to obtain the standard penetration (N-value) of the soil. The results of the standard penetration test are used to estimate the relative strength and compressibility of the soil profile components through empirical correlations to the soils' relative density and consistency. The split-barrel sampler obtains a soil sample for classification purposes and laboratory testing, as appropriate for the type of soil obtained.

Water Level Measurements

Water level observations were attempted during and upon completion of the drilling operation using a 100-foot tape measure. The depths of observed water levels in the boreholes are noted on the boring logs presented in the appendix of this report. In the borings where water is unable to be observed during the field activities, in relatively impervious soils, the accurate determination of the groundwater elevation may not be possible even after several days of observation. Seasonal variations, temperature and recent rainfall conditions may influence the levels of the groundwater table and volumes of water will depend on the permeability of the soils.

ASTM D2166 Unconfined Compressive Strength

Unconfined compression tests are used to obtain approximate compressive strength of cohesive soils by recording the maximum load attained per unit area of a soil sample at failure or at 15% axial strain, whichever occurs first. A compression device may be a platform weighing scale equipped with a device with sufficient capacity and control to provide a specific rate of loading.

ASTM D2216 Water (Moisture) Content of Soil by Mass (Laboratory)

The water content is an important index property used in expressing the phase relationship of solids, water, and air in a given volume of material and can be used to correlate soil behavior with its index properties. In fine grained cohesive soils, the behavior of a given soil type often depends on its natural water content. The water content of a cohesive soil along with its liquid and plastic limits as determined by Atterberg Limit testing are used to express the soil's relative consistency or liquidity index.

ASTM D2974 Standard Test Method for Organic Soils using Loss on Ignition (Laboratory)

These test methods cover the measurement of moisture content, ash content, and organic matter in peats and other organic soils, such as organic clays, silts, and mucks. Ash content of a peat or organic soil sample is determined by igniting the oven-dried sample from the moisture content determination in a muffle furnace at 440°C (Method C) or 750°C (Method D). The substance remaining after ignition is the ash. The ash content is expressed as a percentage of the mass of the oven-dried sample. 2.4 Organic matter is determined by subtracting percent ash content from 100.

ASTM D4318 Atterberg Limits (Laboratory)

Atterberg limit testing defines the liquid limit (LL) and plastic limit (PL) states of a given soil. These limits are used to determine the moisture content limits where the soil characteristics changes from behaving more like a fluid on the liquid limit end to where the soil behaves more like individual soil particles on the plastic limit end. The liquid limit is often used to determine if a soil is a low or high plasticity soil. The plasticity index (PI) is difference between the liquid limit and the plastic limit. The plasticity index is used in conjunction with the liquid limit to determine if the material will behave like a silt or clay.

ASTM D422 Particle Size Analysis (Laboratory)

The Particle Size Analysis of Soils determines the distribution of particle sizes in order to further classify the soil. The distribution of particle sizes larger than 75µm (retained on the No. 200 sieve) is determined by sieving, while the distribution of particle sizes smaller than 75µm is determined by a sedimentation process, using a hydrometer to secure the necessary data. These soils are then classified more accurately based on the distribution information.

APPENDIX B - REPORT LIMITATIONS

Subsurface Conditions:

The subsurface description is of a generalized nature to highlight the major subsurface stratification features and material characteristics. The boring logs included in the appendix should be reviewed for specific information at individual boring locations. These records include soil descriptions, stratifications, penetration resistances, locations of the samples and laboratory test data as well as water level information. The stratifications shown on the boring logs represent the conditions only at the actual boring locations. Variations may occur and should be expected between boring locations. The stratifications represent the approximate boundary between subsurface materials and the actual transition between layers may be gradual. The samples, which were not altered by laboratory testing, will be retained for up to 60 days from the date of this report and then will be discarded.

Geotechnical Risk:

The concept of risk is an important aspect of the geotechnical evaluation. The primary reason for this is that the analytical methods used to develop geotechnical recommendations do not comprise an exact science. The analytical tools that geotechnical engineers use are generally empirical and must be used in conjunction with engineering judgment and experience. Therefore, the solutions and recommendations presented in the geotechnical evaluation should not be considered risk-free, and more importantly, are not a guarantee that the interaction between the soils and the proposed structure will perform as planned. The engineering recommendations, presented in the preceding section, constitute Rubino's professional estimate of the necessary measures for the proposed structure to perform according to the proposed design based on the information generated and reference during this evaluation, and Rubino's experience in working with these conditions.

Warranty:

The geotechnical engineer warrants that the findings, recommendations, specifications, or professional advice contained herein have been made in accordance with generally accepted professional geotechnical engineering practices in the local area. No other warranties are implied or expressed.

Federal Excavation Regulations:

In Federal Register, Volume 54, No. 209 (October 1989), the United States Department of Labor, Occupational Safety and Health Administration (OSHA) amended its "Construction Standards for Excavations, 29 CFR, part 1926, Subpart P". This document was issued to better insure the safety of workmen entering trenches or excavations. This federal regulation mandates that all excavations, whether they be utility trenches, basement excavation or footing excavations, be constructed in accordance with the new OSHA guidelines. It is our understanding that these regulations are being strictly enforced and if they are not closely followed, the owner and the contractor could be liable for substantial penalties.

The contractor is solely responsible for designing and constructing stable, temporary excavations and should shore, slope, or bench the sides of the excavations as required to maintain stability of both the excavation sides and bottom. The contractor's "responsible person," as defined in 29 CFR Part 1926, should evaluate the soil exposed in the excavations as part of the contractor's safety procedures. In no case should slope height, slope inclination, or excavation depth, including utility trench excavation depth, exceed those specified in local, state, and federal safety regulations. Rubino is providing this information solely as a service to our client. Rubino is not assuming responsibility for construction site safety or the contractor's activities; such responsibility is not being implied and should not be inferred.

APPENDIX C - ***SOIL CLASSIFICATION GENERAL NOTES***

DRILLING & SAMPLING SYMBOLS:

SS:	Split Spoon - 1 3/8" I.D., 2" O.D., unless otherwise noted	PS:	Piston Sample
ST:	Thin-Walled Tube - 3" O.D., Unless otherwise noted	WS:	Wash Sample
PM:	Pressuremeter	HA:	Hand Auger
RB:	Rock Bit	HS:	Hollow Stem Auger
DB:	Diamond Bit - 4", N, B	BS:	Bulk Sample

Standard "N" Penetration: Blows per foot of a 140-pound hammer falling 30 inches on a 2-inch O.D. split spoon sampler (SS), except where noted.

WATER LEVEL MEASUREMENT SYMBOLS:
Water levels indicated on the boring logs are the levels measured in the borings at the times indicated. In pervious soils, the indicated levels may reflect the location of groundwater. In low permeability soils, the accurate determination of ground water levels is not possible with only short-term observations.

DESCRIPTIVE SOIL CLASSIFICATION:
Soil Classification is based on the Unified Soil Classification System as defined in ASTM D-2487 and D-2488. Coarse Grained Soils have more than 50% of their dry weight retained on a #200 sieve; they are described as: boulders, cobbles, gravel or sand. Fine Grained Soils have less than 50% of their dry weight retained on a #200 sieve; they are described as: clays, if they are plastic, and silts if they are slightly plastic or non-plastic. Major constituents may be added as modifiers and minor constituents may be added according to the relative proportions based on grain size. In addition to gradation, coarse grained soils are defined on the basis of their relative in-place density and fine grained soils on the basis of their consistency. Example: Lean clay with sand, trace gravel, stiff (CL); silty sand, trace gravel, medium dense (SM).

CONSISTENCY OF FINE-GRAINED SOILS:

Unconfined Compressive Strength, Qu (tsf)			N-Blows/ft.			Consistency
	<	0.25	< 2			Very Soft
0.25	-	0.5	2	-	4	Soft
0.5	-	1	4	-	8	Medium Stiff
1	-	2	8	-	15	Stiff
2	-	4	15	-	30	Very Stiff
4	-	8	30	+		Hard

RELATIVE DENSITY OF COARSE-GRAINED SOILS

N-Blows/ft.			Relative Density
0	-	4	Very Loose
4	-	10	Loose
10	-	30	Medium Dense
30	-	50	Dense
50	+		Very Dense

RELATIVE PROPORTIONS OF SAND & GRAVEL

Descriptive Term	% of Dry Weight		
Trace		<	15
With	15	-	29
Modifier		>	30

RELATIVE PROPORTIONS OF FINES

Descriptive Term	% of Dry Weight		
Trace		<	5
With	5	-	12
Modifier		>	12

*Descriptive Terms apply to components also present in sample

GRAIN SIZE TERMINOLOGY

Major Component	Size Range
Boulders	Over 12 in. (300mm)
Cobbles	12 in. To 3 in. (300mm to 75mm)
Gravel	3 in. To #4 sieve (75mm to 4.75mm)
Sand	#4 to #200 sieve (4.75mm to 0.75mm)

APPENDIX D - SOIL CLASSIFICATION CHART

SOIL CLASSIFICATION CHART

NOTE: DUAL SYMBOLS ARE USED TO INDICATE BORDERLINE SOIL CLASSIFICATIONS

MAJOR DIVISIONS			SYMBOLS GRAPH	SYMBOLS LETTER	TYPICAL DESCRIPTIONS
COARSE GRAINED SOILS MORE THAN 50% OF MATERIAL IS LARGER THAN NO. 200 SIEVE SIZE	GRAVEL AND GRAVELLY SOILS MORE THAN 50% OF COARSE FRACTION RETAINED ON NO. 4 SIEVE	CLEAN GRAVELS		GW	WELL-GRADED GRAVELS, GRAVEL - SAND MIXTURES, LITTLE OR NO FINES
		(LITTLE OR NO FINES)		GP	POORLY-GRADED GRAVELS, GRAVEL - SAND MIXTURES, LITTLE OR NO FINES
		GRAVELS WITH FINES		GM	SILTY GRAVELS, GRAVEL - SAND - SILT MIXTURES
		(APPRECIABLE AMOUNT OF FINES)		GC	CLAYEY GRAVELS, GRAVEL - SAND - CLAY MIXTURES
	SAND AND SANDY SOILS MORE THAN 50% OF COARSE FRACTION PASSING ON NO. 4 SIEVE	CLEAN SANDS		SW	WELL-GRADED SANDS, GRAVELLY SANDS, LITTLE OR NO FINES
		(LITTLE OR NO FINES)		SP	POORLY-GRADED SANDS, GRAVELLY SAND, LITTLE OR NO FINES
		SANDS WITH FINES		SM	SILTY SANDS, SAND - SILT MIXTURES
		(APPRECIABLE AMOUNT OF FINES)		SC	CLAYEY SANDS, SAND - CLAY MIXTURES
FINE GRAINED SOILS MORE THAN 50% OF MATERIAL IS SMALLER THAN NO. 200 SIEVE SIZE	SILTS AND CLAYS	LIQUID LIMIT LESS THAN 50		ML	INORGANIC SILTS AND VERY FINE SANDS, ROCK FLOUR, SILTY OR CLAYEY FINE SANDS OR CLAYEY SILTS WITH SLIGHT PLASTICITY
				CL	INORGANIC CLAYS OF LOW TO MEDIUM PLASTICITY, GRAVELLY CLAYS, SANDY CLAYS, SILTY CLAYS, LEAN CLAYS
				OL	ORGANIC SILTS AND ORGANIC SILTY CLAYS OF LOW PLASTICITY
	SILTS AND CLAYS	LIQUID LIMIT GREATER THAN 50		MH	INORGANIC SILTS, MICACEOUS OR DIATOMACEOUS FINE SAND OR SILTY SOILS
				CH	INORGANIC CLAYS OF HIGH PLASTICITY
				OH	ORGANIC CLAYS OF MEDIUM TO HIGH PLASTICITY, ORGANIC SILTS
HIGHLY ORGANIC SOILS				PT	PEAT, HUMUS, SWAMP SOILS WITH HIGH ORGANIC CONTENTS

APPENDIX E – SITE VICINITY MAP & BORING LOCATION PLAN

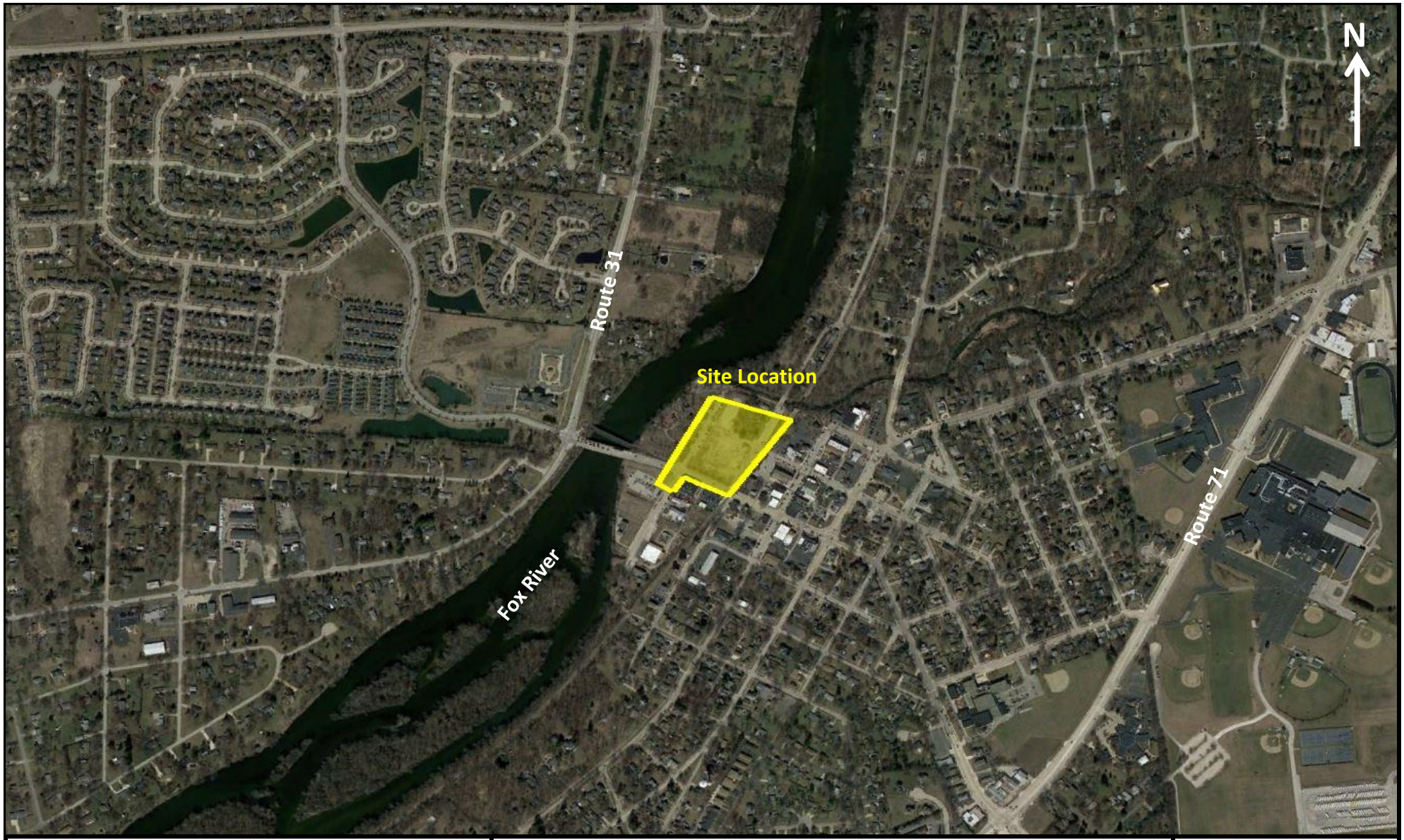

rubino ENGINEERING INC.

425 Shepard Drive
Elgin, Illinois 60123

Project Name:	**Reserve at Hudson Crossing**
Project Location:	Harrison Street and Adams Street Oswego, Illinois 60543
Client:	**Trotter and Associates**
Rubino Project # :	G18.129

Site Vicinity Map

rubino ENGINEERING INC.

425 Shepard Drive
Elgin, Illinois 60123

Project Name:	**Reserve at Hudson Crossing**
Project Location:	Harrison Street and Adams Street Oswego, Illinois 60543
Client:	**Trotter and Associates**
Rubino Project # :	G18.129

Boring Location Plan

APPENDIX F – BORING LOGS

Rubino Engineering, Inc.
665 Tollgate Road, Unit H
Elgin, IL 60123
Telephone: 847-931-1555
Fax: 847-931-1560

LOG OF BORING B-01

Rubino Job No.:	G18.129	Drilling Method:	3 ¼" Hollow Stem Auger
Project:	Reserve at Hudson Crossing	Sampling Method:	Split Spoon
Location:	Harrison and Adams Street	Hammer Type:	Automatic
City, State:	Oswego, Illinois	Boring Location:	Adams Street
Client:	Trotter and Associates		

WATER LEVELS	
While Drilling	N/A
Upon Completion	N/A
Delay	N/A

Station: N/A
Offset: N/A

Elevation (feet)	Depth, (feet)	Graphic Log	Sample Type	Sample No.	Recovery (inches)	MATERIAL DESCRIPTION	USCS Classification	SPT Blows per 6-inch (SS)	Moisture, %	STANDARD PENETRATION TEST DATA (Moisture, PL, LL; 0–25–50) / STRENGTH, tsf (Qu, Qp; 0–2.0–4.0)	Additional Remarks
	0					Approximately 3 ½ inches of ASPHALT					
						Approximately 8 ½ inches of GRAVEL BASE					
				1	3	Medium stiff, black silty CLAY, trace sand and gravel	CL	3-2-3 N=5	17		
				2	5	Weathered blue-green SHALE		8-50/2	10	Qp=4.0 tsf	
						Apparent bedrock based on auger and split spoon refusal at approximately 4 ¼ feet below existing grade. No free groundwater encountered during drilling operations.					

Completion Depth:	4.2 ft
Date Boring Started:	9/26/18
Date Boring Completed:	9/26/18
Logged By:	J.W.
Drilling Contractor:	Rubino Engineering, Inc.

Sample Types:
Auger Cutting, Split-Spoon, Rock Core, Shelby Tube, Hand Auger, Direct Push

Latitude: 41.684401
Longitude: -88.353429
Drill Rig: Geoprobe 7822DT
Remarks:

The stratification lines represent approximate boundaries. The transition may be gradual.

Rubino Engineering, Inc.
665 Tollgate Road, Unit H
Elgin, IL 60123
Telephone: 847-931-1555
Fax: 847-931-1560

LOG OF BORING B-02

Rubino Job No.:	G18.129	Drilling Method:	3 ¼" Hollow Stem Auger
Project:	Reserve at Hudson Crossing	Sampling Method:	Split Spoon
Location:	Harrison and Adams Street	Hammer Type:	Automatic
City, State:	Oswego, Illinois	Boring Location:	Adams Street
Client:	Trotter and Associates		

WATER LEVELS	
While Drilling	N/A
Upon Completion	N/A
Delay	N/A

Station: N/A
Offset: N/A

Elevation (feet)	Depth, (feet)	Graphic Log	Sample Type	Sample No.	Recovery (inches)	MATERIAL DESCRIPTION	USCS Classification	SPT Blows per 6-inch (SS)	Moisture, %	STANDARD PENETRATION TEST DATA (Moisture, PL, LL; 0–25–50) / STRENGTH, tsf (Qu, Qp; 0–2.0–4.0)	Additional Remarks
	0					Approximately 7 inches of ASPHALT					
						Approximately 13 inches of GRAVEL BASE					
				1	13	Medium stiff, greenish brown silty CLAY, trace sand and gravel	CL	6-4-2 N=6	28		Qp=1.0 tsf
									26		
				2	12	Weathered Shale		6-24-50/5	10		
						Apparent bedrock based on auger and split spoon refusal at approximately 5 feet below existing grade. No free groundwater encountered during drilling operations.					

Completion Depth:	4.9 ft
Date Boring Started:	9/26/18
Date Boring Completed:	9/26/18
Logged By:	J.W.
Drilling Contractor:	Rubino Engineering, Inc.

Sample Types:
Auger Cutting, Split-Spoon, Rock Core, Shelby Tube, Hand Auger, Direct Push

Latitude: 41.685267
Longitude: -88.352707
Drill Rig: Geoprobe 7822DT
Remarks:

The stratification lines represent approximate boundaries. The transition may be gradual.

Rubino Engineering, Inc.
665 Tollgate Road, Unit H
Elgin, IL 60123
Telephone: 847-931-1555
Fax: 847-931-1560

LOG OF BORING B-03

Rubino Job No.:	G18.129	Drilling Method:	3 ¼" Hollow Stem Auger
Project:	Reserve at Hudson Crossing	Sampling Method:	Split Spoon
Location:	Harrison and Adams Street	Hammer Type:	Automatic
City, State:	Oswego, Illinois	Boring Location:	Harrison Street
Client:	Trotter and Associates		

WATER LEVELS

While Drilling	6 ft
Upon Completion	3.33 ft
Delay	N/A

Station: N/A
Offset: N/A

Elevation (feet)	Depth, (feet)	Graphic Log	Sample Type	Sample No.	Recovery (inches)	MATERIAL DESCRIPTION	USCS Classification	SPT Blows per 6-inch (SS)	Moisture, %	STANDARD PENETRATION TEST DATA (Moisture, PL, LL; STRENGTH, tsf: Qu, Qp)	Additional Remarks
	0					Approximately 4 inches of ASPHALT					
						Approximately 20 inches of GRAVEL BASE					
				1	14			8-8-4 N=12	13		Qp=2.0 tsf
						Brown, silty CLAY, trace sand			18		
							CL				
						Soft, brown silty CLAY with sand, moist					
				2	12			3-1-1 N=2	20		Qp=0.5 tsf
	5						CL				
						Loose, gravelly SAND, wet					
				3	10		SW	4-2-5 N=7	18		>>Qp=4.5 tsf
									13		
						Blue-green SHALE					
				4	1			50/4	2		
						Apparent bedrock based on auger and split spoon refusal at approximately 8 ¼ feet below existing grade.					

Completion Depth:	8.3 ft
Date Boring Started:	9/26/18
Date Boring Completed:	9/26/18
Logged By:	J.W.
Drilling Contractor:	Rubino Engineering, Inc.

Sample Types:
- Auger Cutting
- Split-Spoon
- Rock Core
- Shelby Tube
- Hand Auger
- Direct Push

Latitude: 41.085628
Longitude: -88.353930
Drill Rig: Geoprobe 7822DT
Remarks:

The stratification lines represent approximate boundaries. The transition may be gradual.

Rubino Engineering, Inc.
665 Tollgate Road, Unit H
Elgin, IL 60123
Telephone: 847-931-1555
Fax: 847-931-1560

LOG OF BORING B-04

Rubino Job No.:	G18.129	Drilling Method:	3 ¼" Hollow Stem Auger
Project:	Reserve at Hudson Crossing	Sampling Method:	Split Spoon
Location:	Harrison and Adams Street	Hammer Type:	Automatic
City, State:	Oswego, Illinois	Boring Location:	Harrison Street
Client:	Trotter and Associates		

WATER LEVELS

While Drilling	8.25 ft
Upon Completion	3.5 ft
Delay	N/A

Station: N/A
Offset: N/A

Elevation (feet)	Depth, (feet)	Graphic Log	Sample Type	Sample No.	Recovery (inches)	MATERIAL DESCRIPTION	USCS Classification	SPT Blows per 6-inch (SS)	Moisture, %	Additional Remarks
	0					Approximately 4 inches of ASPHALT				
						Approximately 8 inches of GRAVEL BASE				
				1	13	Medium stiff, black silty CLAY, trace sand	CL	3-2-3 N=5	23	Qp=2.0 tsf
				2	18	Soft, dark brown silty CLAY with sand	CL	1-1-1 N=2	28	Qp=0.0 tsf
	5			3	5	Medium stiff, brown mottled silty CLAY, trace sand	CL	2-3-3 N=6	30	Qp=0.5 tsf
				4	0	Apparent bedrock based on auger and split spoon refusal at approximately 8 ½ feet below existing grade.		50/1	9	

STANDARD PENETRATION TEST DATA
Moisture (×) 0–25–50; PL (◪), LL (✚)
STRENGTH, tsf: Qu (▲), Qp (✳) 0–2.0–4.0

Completion Depth:	8.3 ft
Date Boring Started:	9/26/18
Date Boring Completed:	9/26/18
Logged By:	J.W.
Drilling Contractor:	Rubino Engineering, Inc.

Sample Types:
Auger Cutting; Split-Spoon; Rock Core; Shelby Tube; Hand Auger; Direct Push

Latitude: 41.684949
Longitude: -88.354457
Drill Rig: Geoprobe 7822DT
Remarks:

The stratification lines represent approximate boundaries. The transition may be gradual.

Rubino Engineering, Inc.
665 Tollgate Road, Unit H
Elgin, IL 60123
Telephone: 847-931-1555
Fax: 847-931-1560

LOG OF BORING B-05

Rubino Job No.:	G18.129	Drilling Method:	3 ¼" Hollow Stem Auger
Project:	Reserve at Hudson Crossing	Sampling Method:	Split Spoon
Location:	Harrison and Adams Street	Hammer Type:	Automatic
City, State:	Oswego, Illinois	Boring Location:	Southwest Corner of Harrison Street and W Washington Street
Client:	Trotter and Associates		

WATER LEVELS

While Drilling	10 ft
Upon Completion	8.5 ft
Delay	N/A

Station: N/A
Offset: N/A

Elevation (feet)	Depth, (feet)	Graphic Log	Sample Type	Sample No.	Recovery (inches)	MATERIAL DESCRIPTION	USCS Classification	SPT Blows per 6-inch (SS)	Moisture, %	Additional Remarks
	0					TOPSOIL: brown silty clay, trace sand and gravel				
						Very stiff, brown silty CLAY, with sand and gravel, possible fill				
				1	12		CL	6-8-7 N=15	22	Qp=2.0 tsf
				2	6			12-8-12 N=20	21	
	5									
						Soft, greenish-gray to brown sandy SILT, trace shells, wet				
				3	12			3-1-1 N=2	23	Qp=0.3 tsf
				4	16		ML	1-1-1 N=2	21 24	Qp=0.3 tsf
	10									
				5	8	Blue-green weathered SHALE		13-50/2	13	
						Apparent bedrock based on auger and split spoon refusal at approximately 11 ¾ feet below existing grade.				

STANDARD PENETRATION TEST DATA
Moisture (×) 0–25–50; PL (◪); LL (✚)
STRENGTH, tsf: Qu (▲) 0–2.0; Qp (✳) 2.0–4.0

Completion Depth:	11.7 ft
Date Boring Started:	9/26/18
Date Boring Completed:	9/26/18
Logged By:	J.W.
Drilling Contractor:	Rubino Engineering, Inc.

Sample Types:
Auger Cutting; Split-Spoon; Rock Core; Shelby Tube; Hand Auger; Direct Push

Latitude: 41.684328
Longitude: -88.355198
Drill Rig: Geoprobe 7822DT
Remarks:

The stratification lines represent approximate boundaries. The transition may be gradual.

Storm Water Pollution Prevention Plan

Route	Marked Route	Section
Various		18-00053-00-FP
Project Number	**County**	**Contract Number**
	Kendall	

This plan has been prepared to comply with the provisions of the National Pollutant Discharge Elimination System (NPDES) Permit No. ILR10 (Permit ILR10), issues by the Illinois Environmental Protection Agency (IEPA) for storm water discharges from construction site activities.

I certify under penalty of law that this document and all attachments were prepared under my direction or supervision in accordance with a system designed to assure that qualified personnel properly gathered and evaluated the information submitted. Based on my inquiry of the person or persons who manage the system, or those persons directly responsible for gathering the information, the information submitted is, to the best of my knowledge and belief, true, accurate and complete. I am aware that there are significant penalties for submitting false information, including the possibility of fine and imprisonment for knowing violations.

Print Name	Title	Agency
Terry Heitkamp	P.E.	Trotter and Associates, Inc.
Signature		**Date**

I. Site Description

A. Provide a description of the project location (include latitude and longitude):

The project is located in downtown Owsego adjacent to Hudson Crossing Park in Section 17, Township 37N, Range 8E of the 3rd Principal Meridian, Kendall County, Illinois. The project is contained within W. Washington Street to W. Jefferson Street (South to North) and S. Harrison Street to S. Adams Street (West to East). Block 5, bordered by Washington, Harrison, Jackson and Adams streets, was once a lumber yard. Block 4, bordered by Jackson, Harrison, Jefferson and Adams streets, contains a gravel parking lot on the western half for Hudson Crossing Park. The east half of Block 4 contains four abandoned residents.
Address: 59 S. Adams Street, Oswego, IL 60543
Latitude: 41º 41' 05" N Longitude: 88º 21' 14" W

B. Provide a description of the construction activity which is subject of this plan:

Shodeen Group, L.L.C. is planning to build an apartment complex in the place of two vacant lots as well as 4 existing homes (to be demolished by others) at the location described. As part of this project, a proposed apartment building will be constructed on Block 5 and will be referred to as 'O' Building. A second apartment building will be constructed on block 4 in the future and will be referred to as 'L' Building.
Currently, there is no defined schedule as to when the 'L' Building and all of the associated work on Lot 4 will be constructed.
The project will also include roadway modifications, water main/services, sanitary main/services and storm sewer construction.

C. Provide the estimated duration of this project:

The estimated duration of construction for the 'O' building, and associated roadway and utility improvements is two (2) years.

D. The total area of the construction site is estimated to be 3.528 acres.

The total area of the site estimated to be disturbed by excavation, grading or other activities is 3.528 acres.

E. The following is a weighted average of the runoff coefficient for this project after construction activities are completed:

0.79

F. List all soils found within project boundaries. Include map unit name, slope information and erosivity:

96.1% of AOI: Millington silt loam, 0 to 2 percent slopes, occasionally flooded
3.9% of AOI: Ripon silt loam, 5 to 10 percent slopes, eroded

G. Provide an aerial extent of wetland acreage at the site:

There are no wetlands on site. See wetland determination report in the Stormwater Management Report.

H. Provide a description of potentially erosive areas associated with this project:

The entirety of the project site is subject to erosion due to excavation/grading activities, slopes up to 6% and disturbance within the floodplain.

I. The following is a description of soil disturbing activities by stages, their locations, and their erosive factors (e.g. steepness of slopes, length of scopes, etc.):

The entire project site will be hydrologically disturbed for an estimated period of just under two (2) years (March 2019 - December 2020). The 'O' building will be constructed in Lot 5 as well as associated roadway and utility improvements of Harrison Street (300' south of Washington to Waubonsie Creek), Jackson Street (Harrison Street to Adams Street) and Adams Street (Washington Street to Waubonsie Creek). Excavated material will be stockpiled and contained on Lot 4 (contained within Harrison, Jackson, Adams and Waubonsie Creek bike path). Proposed roadways profiles will maintain a maximum slope of 6%. Everything from Adams to the west drains to the Fox river. The project site length in this direction is roughly 400'.
Erosivity Factor using EPA estimation guidelines: 5.0 or greater
Erosivity Index Value using EPA estimation guidelines: 326

J. See the erosion control plans and/or drainage plans for this contract for information regarding drainage patterns, approximate slopes anticipated before and after major grading activities, locations where vehicles enter or exit the site and controls to prevent off site sediment tracking (to be added after contractor identifies locations), areas of soil disturbance, the location of major structural and non-structural controls identified in the plan, the location of areas where stabilization practices are expected to occur, surface waters (including wetlands) and locations where storm water is discharged to surface water including wetlands.

K. Identify who owns the drainage system (municipality or agency) this project will drain into:

Village of Oswego

L. The following is a list of General NPDES ILR40 permittees within whose reporting jurisdiction this project is located.

Village of Oswego

M. The following is a list of receiving water(s) and the ultimate receiving water(s) for this site. The location of the receiving waters can be found on the erosion and sediment control plans:

Receiving Water: Waubonsie Creek
Ultimate Receiving Water: Fox River

N. Describe areas of the site that are to be protected or remain undisturbed. These areas may include steep slopes, highly erodible soils, streams, stream buffers, specimen trees, natural vegetation, nature preserves, etc.

Waubonsie Creek is to be protected and remain undisturbed throughout construction.

O. The following sensitive environmental resources are associated with this project, and may have the potential to be impacted by the proposed development:

- ☒ Floodplain
- ☐ Wetland Riparian
- ☐ Threatened and Endangered Species
- ☐ Historic Preservation
- ☐ 303(d) Listed receiving waters for suspended solids, turbidity, or siltation
- ☐ Receiving waters with Total Maximum Daily Load (TMDL) for sediment, total suspended solids, turbidity, or siltation
- ☐ Applicable Federal, Tribal, State or Local Programs
- ☐ Other

1. 303(d) Listed receiving waters (fill out this section if checked above):

   a. The name(s) of the listed water body, and identification of all pollutants causing impairment:

   b. Provide a description of how erosion and sediment control practices will prevent a discharge of sediment resulting from a storm event equal to or greater than a twenty-five (25) year, twenty-four (24) hour rainfall event:

   c. Provide a description of the location(s) of direct discharge from the project site to the 303(d) water body:

   d. Provide a description of the location(s) of any dewatering discharges to the MS4 and/or water body:

2. TMDL (fill out this section if checked above)

   a. The name(s) of the listed water body:

   b. Provide a description of the erosion and sediment control strategy that will be incorporated into the site design that is consistent with the assumptions and requirements of the TMDL:

   c. If a specific numeric waste load allocation has been established that would apply to the project's discharges, provide a description of the necessary steps to meet the allocation:

P. The following pollutants of concern will be associated with this construction project:

- ☒ Soil Sediment
- ☒ Concrete
- ☒ Concrete Truck waste
- ☒ Concrete Curing Compounds
- ☒ Solid waste Debris
- ☒ Paints
- ☒ Solvents
- ☒ Fertilizers / Pesticides
- ☒ Petroleum (gas, diesel, oil, kerosene, hydraulic oil / fluids)
- ☒ Antifreeze / Coolants
- ☒ Waste water from cleaning construction equipment
- ☐ Other (specify) _____
- ☐ Other (specify) _____
- ☐ Other (specify) _____
- ☐ Other (specify) _____
- ☐ Other (specify) _____

II. Controls

This section of the plan addresses the controls that will be implemented for each of the major construction activities described in I.C. above and for all use areas, borrow sites, and waste sites. For each measure discussed, the Contractor will be responsible for its implementation as indicated. The Contractor shall provide to the Resident Engineer a plan for the implementation of the measures indicated. The Contractor and subcontractors, will notify the Resident Engineer of any proposed changes, maintenance, or modifications to keep construction activities compliant with the Permit ILR10. Each such Contractor has signed the required certification on forms which are attached to, and are a part of, this plan:

A. **Erosion and Sediment Controls:** At a minimum, controls must be coordinated, installed, and maintained to:
   1. Minimize the amount of soil exposed during construction activity;
   2. Minimize the disturbance of steep slopes;
   3. Maintain natural buffers around surface waters, direct storm water to vegetated areas to increase sediment removal and maximize storm water infiltration, unless infeasible;
   4. Minimize soil compaction and, unless infeasible, preserve topsoil.

B. **Stabilization Practices:** Provided below is a description of interim and permanent stabilization practices, including site- specific scheduling of the implementation of the practices. Site plans will ensure that existing vegetation is preserved where attainable and disturbed portions of the site will be stabilized. Stabilization practices may include but are not limited to: temporary seeding, permanent seeding, mulching, geotextiles, sodding, vegetative buffer strips, protection of trees, preservation of mature vegetation, and other appropriate measures. Except as provided below in II(B)(1) and II(B)(2), stabilization measures shall be initiated **immediately** where construction activities have temporarily or permanently ceased, but in no case more than **one (1) day** after the construction activity in that portion of the site has temporarily or permanently ceases on all disturbed portions of the site where construction will not occur for a period of fourteen (14) or more calendar days.

   1. Where the initiation of stabilization measures is precluded by snow cover, stabilization measures shall be initiated as soon as practicable.
   2. On areas where construction activity has temporarily ceased and will resume after fourteen (14) days, a temporary stabilization method can be used.

   The following stabilization practices will be used for this project:

   - ☒ Preservation of Mature Vegetation
   - ☐ Vegetated Buffer Strips
   - ☒ Protection of Trees
   - ☐ Temporary Erosion Control Seeding
   - ☐ Temporary Turf (Seeding, Class 7)
   - ☐ Temporary Mulching
   - ☒ Permanent Seeding
   - ☒ Erosion Control Blanket / Mulching
   - ☒ Sodding
   - ☐ Geotextiles
   - ☐ Other (specify) _____
   - ☐ Other (specify) _____
   - ☐ Other (specify) _____
   - ☐ Other (specify) _____

   Describe how the stabilization practices listed above will be utilized during construction:

-Stabilization Practice: Preservation of Mature Vegetation
-Installation Schedule: Prior to earth disturbing activities and throughout project length.
-Product/Installation: Delineate protected areas prior to clearing/grubbing or soil disturbing activities.
-Maintenance and Inspections: See IDOT Erosion and Sediment Control Field Guide - 'Protecting Existing Vegetation & Natural Features'.
-Responsible Staff: Certified Contractor

-Stabilization Practice: Protection of Trees
-Installation Schedule: Prior to earth disturbing activities and throughout project length.
-Product/Installation: Delineate protected trees prior to clearing/grubbing or soil disturbing activities.
-Maintenance and Inspections: See IDOT Erosion and Sediment Control Field Guide - 'Protecting Existing Vegetation & Natural Features'.
-Responsible Staff: Certified Contractor

-Stabilization Practice: Permanent Seeding
-Installation Schedule: See 'Seeding and Mulching' Schedule in the Erosion Control Details within the project plans.
-Product/Installation: See Section 250 of the IDOT SSRBC.
-Maintenance and Inspections: See IDOT Erosion and Sediment Control Field Guide - 'Temporary Erosion Control Seeding'.
-Responsible Staff: Certified Contractor

-Stabilization Practice: Erosion Control Blanket / Mulching
-Installation Schedule: Immediately after Seeding
-Product/Installation: See 'Erosion Control Blanket Installation' detail within the Erosion Control Details of the project plans.
-Maintenance and Inspections: See IDOT Erosion and Sediment Control Field Guide - 'Erosion Control Blanket (ECB)'.
-Responsible Staff: Certified Contractor

-Stabilization Practice: Sodding
-Installation Schedule: Immediately after soil disturbing activities are complete. Only use sod harvested, delivered and installed within the same 48-hour period.
-Product/Installation: See Section 252 of the IDOT SSRBC.
-Maintenance and Inspections: See IDOT Erosion and Sediment Control Field Guide - 'Sod'.
-Responsible Staff: Certified Contractor

Describe how the stabilization practices listed above will be utilized after construction activities have been completed:

Sod and Seeding will be maintained after Notice of Termination by the HOA for The Reserve at Hudson Crossing.

C. **Structural Practices:** Provided below is a description of structural practices that will be implemented, to the degree attainable, to divert flows from exposed soils, store flows or otherwise limit runoff and the discharge of pollutants from exposed areas of the site. Such practices may include but are not limited to: perimeter erosion barrier, earth dikes, drainage swales, sediment traps, ditch checks, subsurface drains, pipe slope drains, level spreaders, storm drain inlet protection, rock outlet protection, reinforced soil retaining systems, gabions, and temporary or permanent sediment basins. The installation of these devices may be subject to Section 404 of the Clean Water Act.

The following stabilization practices will be used for this project:

- ☒ Perimeter Erosion Barrier
- ☐ Temporary Ditch Check
- ☒ Storm Drain Inlet Protection
- ☐ Sediment Trap
- ☐ Rock Outlet Protection
- ☐ Riprap
- ☐ Gabions
- ☐ Slope Mattress

- ☐ Temporary Pipe Slope Drain
- ☐ Temporary Sediment Basin
- ☐ Temporary Stream Crossing
- ☐ Stabilized Construction Exits
- ☐ Turf Reinforcement Mats
- ☐ Permanent Check Dams
- ☐ Permanent Sediment Basin
- ☐ Aggregate Ditch
- ☐ Paved Ditch
- ☐ Retaining Walls
- ☐ Slope Walls
- ☐ Concrete Revetment Mats
- ☐ Level Spreaders
- ☐ Other (specify) _____
- ☐ Other (specify) _____
- ☐ Other (specify) _____
- ☐ Other (specify) _____
- ☐ Other (specify) _____

Describe how the structural practices listed above will be utilized during construction:

-Stabilization Practice: Perimeter Erosion Barrier
-Installation Schedule: Prior to any earth disturbing activities and until all soil is permanently stabilized.
-Product/Installation: See 'Silt Fence' detail within the project plans.
-Maintenance and Inspections: See IDOT Erosion and Sediment Control Field Guide - 'Perimeter Erosion Barrier'.
-Responsible Staff: Certified Contractor

-Stabilization Practice: Storm Drain Inlet Protection
-Installation Schedule: Prior to any earth disturbing activities and until all soil is permanently stabilized.
-Product/Installation: See 'Inlet Protection' detail within the project plans.
-Maintenance and Inspections: See IDOT Erosion and Sediment Control Field Guide - 'Storm Drain Inlet Protection'.
-Responsible Staff: Certified Contractor

Describe how the structural practices listed above will be utilized after construction activities have been completed:

The above listed structural practices will be removed after permanent stabilization is achieved.

D. **Treatment Chemicals**

Will polymer flocculents or treatment chemicals be utilized on this project: ☐ Yes ☒ No

If yes above, identify where and how polymer flocculents or treatment chemicals will be utilized on this project.

E. **Permanent Storm Water Management Controls:** Provided below is a description of measures that will be installed during the construction process to control volume and pollutants in storm water discharges that will occur after construction operations have been completed. The installation of these devices may be subject to Section 404 of the Clean Water act.

1. Such practices may include but are not limited to: storm water detention structures (including wet ponds), storm water retention structures, flow attenuation by use of open vegetated swales and natural depressions, infiltration of runoff on site, and sequential systems (which combine several practices).

   The practices selected for implementation were determined on the basis of the technical guidance in Chapter 41 (Construction Site Storm Water Pollution Control) of the IDOT Bureau of Design & Environment Manual. If practices other than those discussed in Chapter 41 are selected for implementation or if practices are applied to situations different from those covered in Chapter 41, the technical basis for such decisions will be explained below.
2. Velocity dissipation devices will be placed at discharge locations and along the length of any outfall channel as necessary to provide a non-erosive velocity flow from the structure to a water course so that the natural physical and biological characteristics and functions are maintained and protected (e.g. maintenance of hydrologic conditions such as the hydroperiod and hydrodynamics present prior to the initiation of construction activities).

Description of permanent storm water management controls:

N/A

F. **Approved State or Local Laws:** The management practices, controls, and provisions contained in this plan will be in accordance with IDOT specifications, which are at least as protective as the requirements contained in the Illinois Environmental Protection Agency's Illinois Urban Manual. Procedures and requirements specified in applicable sediment and erosion site plans or storm water management plans approved by local officials shall be described or incorporated by reference in the space provided below. Requirements specified in sediment and erosion site plans, site permits, storm water management site plans or site permits approved by local officials that are applicable to protecting surface water resources are, upon submittal of an NOI, to be authorized to discharge under the Permit ILR10 incorporated by reference and are enforceable under this permit even if they are not specifically included in the plan.

Description of procedures and requirements specified in applicable sediment and erosion site plans or storm water management plans approved by local officials:

See Erosion Control Plans and Storm Water Management Plan.

G. **Contractor Required Submittals:** Prior to conducting any professional services at the site covered by this plan, the Contractor and each subcontractor responsible for compliance with the permit shall submit to the Resident Engineer a Contractor Certification Statement, BDE 2342a.

1. The Contractor shall provide a construction schedule containing an adequate level of detail to show major activities with implementation of pollution prevention BMPs, including the following items:
    - Approximate duration of the project, including each stage of the project
    - Rainy season, dry season, and winter shutdown dates
    - Temporary stabilization measures to be employed by contract phases
    - Mobilization time frame
    - Mass clearing and grubbing/roadside clearing dates
    - Deployment of Erosion Control Practices
    - Deployment of Sediment Control Practices (including stabilized construction entrances/exits)
    - Deployment of Construction Site Management Practices (including concrete washout facilities, chemical storage, refueling locations, etc.)
    - Paving, saw-cutting, and any other pavement related operations
    - Major planned stockpiling operations
    - Time frame for other significant long-term operations or activities that may plan non-storm water discharges such as dewatering, grinding, etc.
    - Permanent stabilization activities for each area of the project
2. The Contractor and each subcontractor shall provide, as an attachment to their signed Contractor Certification Statement, a discussion of how they will comply with the requirements of the permit in regard to the following items and provide a graphical representation showing location and type of BMPs to be used when applicable:
    - Vehicle Entrances and Exits - Identify type and location of stabilized construction entrances and exits to be used and how they will be maintained.
    - Material delivery, Storage, and Use - Discuss where and how materials including chemicals, concrete curing compounds, petroleum products, etc. will be stored for this project.
    - Stockpile Management - Identify the location of both on-site and off-site stockpiles. Discuss what BMPs will be used to prevent pollution of storm water from stockpiles.
    - Waste Disposal - Discuss methods of waste disposal that will be used for this project.
    - Spill Prevention and Control - Discuss steps that will be taken in the event of a material spill (chemicals, concrete curing compounds, petroleum, etc.).
    - Concrete Residuals and Washout Wastes - Discuss the location and type of concrete washout facilities to be used on this project and how they will be signed and maintained.
    - Litter Management - Discuss how litter will be maintained for this project (education of employees, number of dumpsters, frequency of dumpster pick-up, etc.).
    - Vehicle and Equipment Cleaning and Maintenance - Identify where equipment cleaning and maintenance locations for this project and what BMPs will be used to ensure containment and spill prevention.

- Dewatering Activities - Identify the controls which will be used during dewatering operations to ensure sediments will not leave the construction site.
- Polymer Flocculants and Treatment Chemicals - Identify the use and dosage of treatment chemicals and provide the Resident Engineer with Material Safety Data Sheets. Describe procedures on how the chemicals will be used and identify who will be responsible for the use and application of these chemicals. The selected individual must be trained on the established procedures.
- Additional measures indicated in the plan.

III. Maintenance

When requested by the Contractor, the Resident Engineer will provide general maintenance guides to the Contractor for the practices associated with this project. The following additional procedures will be used to maintain, in good and effective operating conditions, the vegetation, erosion and sediment control measures and other protective measures identified in this plan. It will be Contractor's responsibility to attain maintenance guidelines for any manufactured BMPs which are to be installed and maintained per manufacture's specifications.

See IDOT Erosion and Sediment Control Field Guide for Construction Inspection/Maintenance Guidelines.

IV. Inspections

Qualified personnel shall inspect disturbed areas of the construction site which have not yet been finally stabilized, structural control measures, and locations where vehicles and equipment enter and exit the site using IDOT Storm Water Pollution Prevention Plan Erosion Control Inspection Report (BC 2259). Such inspections shall be conducted at least once every seven (7) calendar days and within twenty-four (24) hours of the end of a storm or by the end of the following business or work day that is 0.5 inch or greater or equivalent snowfall.

Inspections may be reduced to once per month when construction activities have ceased due to frozen conditions. Weekly inspections will recommence when construction activities are conducted, or if there is 0.5" or greater rain event, or a discharge due to snowmelt occurs.

If any violation of the provisions of this plan is identified during the conduct of the construction work covered by this plan, the Resident Engineer shall notify the appropriate IEPA Field Operations Section office by e-mail at: epa.swnoncomp@illinois.gov, telephone or fax within twenty-four (24) hours of the incident. The Resident Engineer shall then complete and submit an "Incidence of Non-Compliance" (ION) report for the identified violation within five (5) days of the incident. The Resident Engineer shall use forms provided by IEPA and shall include specific information on the cause of noncompliance, actions which were taken to prevent any further causes of noncompliance, and a statement detailing any environmental impact which may have resulted from the noncompliance. All reports of non-compliance shall be signed by a responsible authority in accordance with Part VI. G of the Permit ILR10.

The Incidence of Non-Compliance shall be mailed to the following address:

Illinois Environmental Protection Agency
Division of Water Pollution Control
Attn: Compliance Assurance Section
1021 North Grand East
Post Office Box 19276
Springfield, Illinois 62794-9276

Additional Inspections Required:

As directed by the supervising Engineer

V. Failure to Comply

Failure to comply with any provisions of this Storm Water Pollution Prevention Plan will result in the implementation of a National Pollutant Discharge Elimination System/Erosion and Sediment Control Deficiency Deduction against the Contractor and/or penalties under the Permit ILR10 which could be passed on to the Contractor.

Illinois Department of Transportation

Contractor Certification Statement

Prior to conducting any professional services at the site covered by this contract, the Contractor and every subcontractor must complete and return to the Resident Engineer the following certification. A separate certification must be submitted by each firm. Attach to this certification all items required by Section II.G of the Storm Water Pollution Prevention Plan (SWPPP) which will be handled by the Contractors/subcontractor completing this form.

Route	Marked Route	Section
Various		

Project Number	County	Contract Number
	Kendall	

This certification statement is a part of SWPPP for the project described above, in accordance with the General NPDES Permit No. ILR10 issued by the Illinois Environmental Protection Agency.

I certify under penalty of law that I understand the terms of the Permit No. ILR10 that authorizes the storm water discharges associated with industrial activity from the construction site identified as part of this certification.

In addition, I have read and understand all of the information and requirements stated in SWPPP for the above mentioned project; I have received copies of all appropriate maintenance procedures; and, I have provided all documentation required to be in compliance with the Permit ILR10 and SWPPP and will provide timely updates to these documents as necessary.

☐ Contractor

☐ Sub-Contractor

Print Name	Signature

Title	Date

Name of Firm	Telephone

Street Address	City/State/Zip

Items which the Contractor/subcontractor will be responsible for as required in Section II.G. of SWPPP:

See Section II.G. of SWPPP