Engineering Plans
for
the Village of Oswego

The Reserve at Hudson Crossing - Roadway Improvements

Located in Section 17, Township 37 North, Range 8 East
Oswego, Kendall County, Illinois

Index of Sheets

SHEET NO.	DESCRIPTION
1	COVER SHEET
2-3	GENERAL NOTES AND LEGEND
4	SUMMARY OF QUANTITIES
5-9	SCHEDULE OF QUANTITIES
10-12	TYPICAL SECTIONS
13	ALIGNMENTS, TIES AND BENCHMARKS
14	OVERALL SITE PLAN
15-21	REMOVAL PLANS
22-28	ROADWAY PLAN AND PROFILES
29-34	GRADING PLAN AND PROFILES
35-36	INTERSECTION GRADING PLANS
37	COMPENSATORY STORAGE GRADING PLAN
38-39	DETOUR PLANS
40-45	DRAINAGE PLAN AND PROFILES
46-49	EROSION CONTROL PLANS
50-55	SANITARY SEWER PLAN AND PROFILES
56-61	WATER MAIN PLAN AND PROFILES
62-64	UNDERGROUND ELECTRIC PLANS
65-78	LIGHTING PLANS
79	HUDSON CROSSING PARK LIGHTING PLAN
80-82	PAVEMENT MARKING AND SIGNAGE PLANS
83-84	LANDSCAPE PLANS
85	HUDSON CROSSING PARK ENTRANCE PLAN
86-92	DETAILS
93-128	CROSS SECTIONS

Traffic Data

STREET	CURRENT ADT	FUTURE ADT
HARRISON	1,800	2,000
ADAMS	1,800	2,000
JACKSON	1,800	2,000
WASHINGTON	1,800	2,000

Design / Posted Speed

STREET	DESIGN SPEED	POSTED SPEED
HARRISON	25	25
ADAMS	25	25
JACKSON	25	25
WASHINGTON	25	25

Design Functional Classification

STREET	DESIGN FUNCTIONAL CLASSIFICATION
HARRISON	LOCAL (URBAN CBD)
ADAMS	LOCAL (URBAN CBD)
JACKSON	LOCAL (URBAN CBD)
WASHINGTON	LOCAL (URBAN CBD)

Highway Standards

STANDARD NO.	DESCRIPTION
000001-07	STANDARD SYMBOLS, ABBREVIATIONS AND PATTERNS
424001-11	PERPENDICULAR CURB RAMPS FOR SIDEWALKS
424006-04	DIAGONAL CURB RAMPS FOR SIDEWALKS
424011-04	CORNER PARALLEL CURB RAMPS FOR SIDEWALKS
424021-05	DEPRESSED CORNER FOR SIDEWALKS
442201-03	CLASS C AND D PATCHES
604001-04	FRAME AND LIDS TYPE 1
542301-03	PRECAST REINFORCED CONCRETE FLARED END SECTION
604036-03	GRATE TYPE 8
604046-03	FRAME AND GRATE TYPE 10
604051-04	FRAME AND GRATE TYPE 11
701606-10	URBAN SINGLE LANE CLOSURE, MULTILANE, 2W WITH MOUNTABLE MEDIAN
701901-08	TRAFFIC CONTROL DEVICES
720006-04	SIGN PANEL ERECTION DETAILS
720016-04	MAST ARM MOUNTED STREET NAME SIGNS
728001-01	TELESCOPING STEEL SIGN SUPPORT
B.L.R. 10-7	PCC PAVEMENT SPECIAL
B.L.R. 14-12	PORTLAND CEMENT CONCRETE PAVEMENT (NONREINFORCED)
B.L.R. 22-7	TYPICAL APPLICATION OF TRAFFIC CONTROL DEVICES FOR CONSTRUCTION ON RURAL LOCAL HIGHWAYS

IDOT District 3 Standards

STANDARD NO.	DESCRIPTION
251-1	EROSION CONTROL BLANKET AT MEDIAN INLET STD. 604101 RO STA. 604106
251-2	DETAIL OF EROSION CONTROL BLANKET LINING AROUND END SECTION
251-4	EXCELSIOR BLANKET (SPECIAL) DETAILS
280-1	EROSION CONTROL DETAILS FOR SILT FENCE
406-9	BUTT JOINT
423-1	PCC URBAN ENTRANCES
720-10	TEMPORARY INFORMATION SIGN - ROAD CLOSED
780-3	TYPICAL SPACING DETAIL FOR CROSSWALK AND STOP BARS
780-9	TYPICAL DETAIL FOR PAINTING HANDICAP MARKINGS

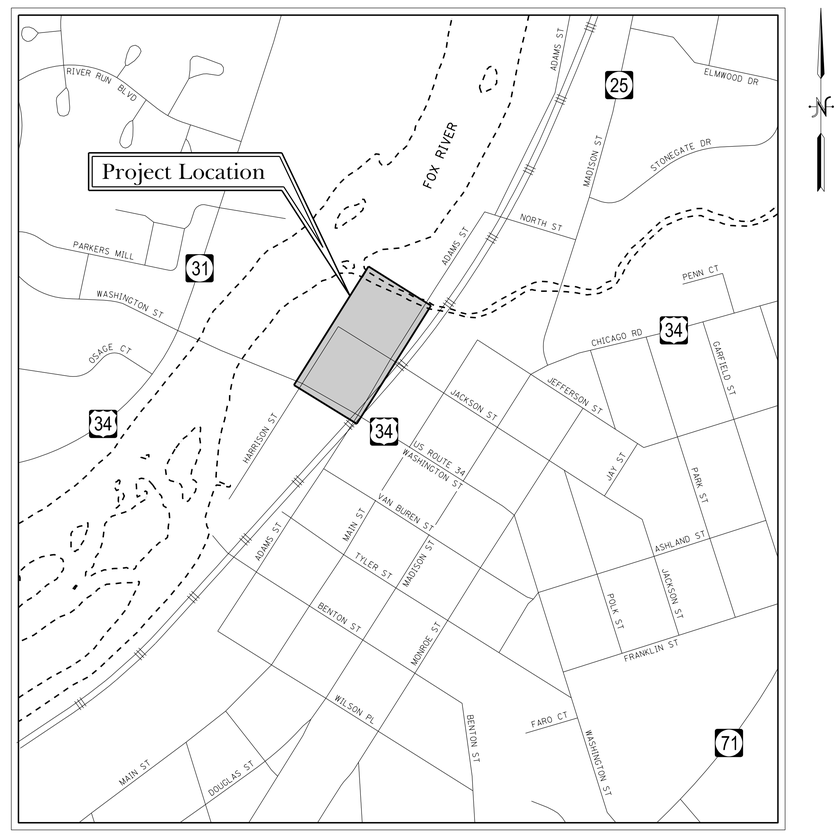

Location Map

N.T.S.

Harrison Street = 1,200 Feet (0.227 Miles)
Adams Street = 700 Feet (0.133 Miles)
Jackson Street = 400 Feet (0.076 Miles)
Washington Street = 340 Feet (0.064 Miles)

Net Project Length = 2,640 Feet (0.500 Miles)

Village of Oswego

100 Parkers Mill
Oswego, IL 60543

ISSUED FOR BIDDING
NOT FOR CONSTRUCTION

STATE OF ILLINOIS
DEPARTMENT OF TRANSPORTATION
DIVISION OF HIGHWAYS

APPROVED _____

JENNIFER HUGHES
PUBLIC WORKS DIRECTOR /VILLAGE ENGINEER
VILLAGE OF OSWEGO

PASSED _____

DISTRICT 3 ENGINEER OF LOCAL ROAD & STREETS

RELEASED FOR BID BASED ON LIMITED REVIEW _____

REGION 2 ENGINEER

811 Know what's below. Call before you dig.

NOTE:

THE CONTRACTOR SHALL BE RESPONSIBLE FOR DISTRIBUTING COMPLETE SETS OF THESE PLANS AND PROJECT SPECIFICATIONS TO ALL SUBCONTRACTORS INVOLVED IN THIS PROJECT. A COMPLETE COPY OF THESE PLANS AND PROJECT SPECIFICATIONS SHALL BE IN THE POSSESSION OF THE CONTRACTOR AND ALL SUB CONTRACTORS ON THE PROJECT AT ALL TIMES.

PLANS PREPARED BY:

TROTTER and ASSOCIATES, INC.
ENGINEERS AND SURVEYORS
40W201 Wasco Road, Suite D
St. Charles, IL 60175
Ph.: 630-587-0470 Fax: 630-587-0475

Issued for Bidding: February 21, 2019
Revised: February 15, 2019
Revised: January 11, 2019
Revised: December 4, 2018
Revised: November 21, 2018
Date: November 9, 2018

I HEREBY CERTIFY THAT THESE PLANS WERE PREPARED UNDER MY DIRECT SUPERVISION.
DATED AT ST. CHARLES, ILLINOIS, THIS 21st DAY OF February, 2019

TERRY HEITKAMP, P.E., TROTTER AND ASSOCIATES, INC.
ILLINOIS REGISTERED PROFESSIONAL ENGINEER No. 062-058718 / EXPIRATION DATE 11-30-2019
ILLINOIS DEPARTMENT OF PROFESSIONAL REGULATION FIRM NUMBER 184-002148

TERRY M. HEITKAMP 58718 LICENSED PROFESSIONAL ENGINEER OF ILLINOIS
SEAL

General Notes

1. ALL ITEMS OF THIS PROJECT SHALL BE GOVERNED BY SPECIFICATIONS INCLUDED IN THE DOCUMENTS LISTED BELOW:
   - A. "STANDARD SPECIFICATIONS FOR ROAD AND BRIDGE CONSTRUCTION" PREPARED BY THE DEPARTMENT OF TRANSPORTATION OF THE STATE OF ILLINOIS AND ADOPTED BY SAID DEPARTMENT (LATEST REVISION) AND HEREINAFTER REFERRED TO AS THE STANDARD SPECIFICATIONS.
   - B. "SUPPLEMENTAL SPECIFICATIONS AND RECURRING SPECIAL PROVISIONS" ADOPTED BY THE ILLINOIS DEPARTMENT OF TRANSPORTATION (LATEST REVISION DATE).
   - C. "STANDARDS AND SPECIFICATIONS FOR SOIL EROSION AND SEDIMENT CONTROL" BY IEPA- ILLINOIS URBAN MANUAL - A TECHNICAL MANUAL DESIGNED FOR URBAN ECOSYSTEM PROTECTION AND ENHANCEMENT, 1995.
   - D. "STANDARD SPECIFICATIONS FOR WATER AND SEWER MAIN CONSTRUCTION IN ILLINOIS (LATEST REVISION).
   - E. ILLINOIS MANUAL ON UNIFORM TRAFFIC CONTROL DEVICES FOR STREETS & HIGHWAYS.
   - F. FOX METRO WATER RECLAMATION DISTRICT STANDARD SPECIFICATIONS (LATEST REVISION)
   - G. IN THE EVENT OF A CONFLICT BETWEEN THESE VARIOUS STANDARDS, THE VILLAGE OF OSWEGO STANDARDS SHALL APPLY.
2. ALL TRAFFIC CONTROL AND OTHER ADVISORY SIGNS NEEDED FOR CONSTRUCTION ARE TO BE FURNISHED BY THE DEVELOPER/CONTRACTOR IN ACCORDANCE WITH SECTION 107 OF THE STANDARD SPECIFICATIONS.
3. ALL WORK PERFORMED SHALL COMPLY WITH ALL APPLICABLE RULES AND REGULATIONS OF THE OSHA. THE DEVELOPER/CONTRACTOR IS RESPONSIBLE FOR PROVIDING A SAFE AND HEALTHFUL WORKING CONDITION THROUGHOUT THE CONSTRUCTION OF THE VARIOUS IMPROVEMENTS.
4. THE DEVELOPER/CONTRACTOR IS RESPONSIBLE FOR NOTIFYING JULIE 1-800-892-0123 AT LEAST 48 HOURS IN ADVANCE OF CONSTRUCTION OPERATIONS. ALL UTILITIES MUST BE STAKED/LOCATED BEFORE CONSTRUCTION.
5. THE DEVELOPER/CONTRACTOR IS RESPONSIBLE FOR NOTIFYING THE VILLAGE OF OSWEGO PUBLIC WORKS DEPT. (630) 554-3242 A MINIMUM OF 48 HOURS BEFORE CONSTRUCTION ACTIVITIES. A 24-HOUR NOTICE MUST BE PROVIDED FOR INSPECTIONS AND TESTS. VILLAGE STAFF MUST OPERATE ALL WATER MAIN VALVES AND HYDRANTS ONLY.
6. THE DEVELOPER/CONTRACTOR SHALL PROTECT AND PRESERVE ALL SECTION/SUBSECTION MONUMENTS OR PROPERTY MONUMENTS UNTIL THE OWNER; THEIR AGENT OR AN AUTHORIZED SURVEYOR HAS WITNESSED OR OTHERWISE REFERENCED THEIR LOCATIONS.
7. THE DEVELOPER/CONTRACTOR SHALL BE AWARE OF POTENTIAL CONFLICTS WITH EXISTING UTILITIES AS INDICATED ON THE PLANS. THESE AREAS SHALL BE EXCAVATED TO DETERMINE ELEVATIONS BEFORE BEGINNING CONSTRUCTION AND ANY IRREGULARITIES TURNED OVER TO THE DESIGN ENGINEER.

Earthwork and Grading

1. ALL FILL PLACED UNDER THE PROPOSED PAVEMENT SHALL CONFORM TO SECTION 205 OF THE REFERENCED IDOT "STANDARD SPECIFICATIONS". THIS INCLUDES (BUT IS NOT LIMITED TO) THE REMOVAL OF TOPSOIL FROM FILL AREAS AND THE PROPER COMPACTION OF FILL.
2. THE SUBGRADE FOR ROADWAYS AND SIDEWALKS SHALL BE FREE OF UNSUITABLE MATERIAL AND SHALL BE COMPACTED TO A MINIMUM OF 95% OF MODIFIED PROCTOR DRY DENSITY. TESTING FOR COMPACTION SHALL BE THE RESPONSIBILITY OF THE DEVELOPER/CONTRACTOR AND THE VILLAGE SHALL BE PROVIDED WITH A COPY OF THE TESTING REPORT.
3. ALL EARTHWORK SHALL RESULT IN A FINAL BLACK DIRT PLACEMENT WITHIN 0.10 FEET OF THE APPROVED PLAN WITH RECORD AS-BUILT DRAWINGS (AND STAGE VS. STORAGE CALCULATIONS WHERE APPROPRIATE) PREPARED BY THE DESIGN ENGINEER OF RECORD AND SUBMITTED FOR VILLAGE REVIEW AND APPROVAL.
4. ALL EXCESS EARTHWORK MATERIALS, IF NOT TO BE UTILIZED AS FILL MATERIAL, SHALL BE COMPLETELY REMOVED FROM THE SITE AND DISPOSED OF OFF-SITE BY THE DEVELOPER/CONTRACTOR UNLESS OTHERWISE DIRECTED BY THE VILLAGE ENGINEER.
5. ALL TOPSOIL AND ORGANIC MATERIALS SHALL BE STRIPPED AND REMOVED BEFORE THE PLACEMENT OF FILL MATERIALS.
6. TESTING: THE DEVELOPER/CONTRACTOR SHALL PROVIDE AS A MINIMUM, A FULLY LOADED SIX WHEELED TRUCK FOR PROOF ROLLING THE ROADWAY SUBGRADE PRIOR TO THE INSTALLATION OF CURBS AND BASE MATERIAL. THE TRUCK SHALL BE DRIVEN SLOWLY OVER THE SUBGRADE AND THE VILLAGE ENGINEER OR THEIR DESIGNATED REPRESENTATIVE SHALL WITNESS ANY DEFLECTIONS/DEPRESSIONS EXCEEDING ONE (1) INCH IN DEPTH. THESE AREAS OF UNSUITABLE MATERIAL SHALL BE MARKED FOR REMOVAL AND REPLACEMENT WITH SUITABLE MATERIALS AS SPECIFIED BY THE STANDARD SPECIFICATIONS . THE GRANULAR SUB-BASE SHALL BE SIMILARLY PROOF ROLLED FOR DEFLECTIONS/DEPRESSIONS EXCEEDING ONE-HALF (1/2) INCH IN DEPTH.
7. THE DEVELOPER/CONTRACTOR SHALL USE CARE IN GRADING OPERATIONS AROUND TREES, SHRUBS, AND BUSHES, WHICH ARE TO BE SAVED SO AS NOT TO CAUSE INJURY TO THE ROOTS, TRUNKS, OR LIMBS. PROTECTIVE FENCING SHALL BE PLACED AROUND VEGETATION TO BE SAVED. ROOT SAW-CUTTING SHALL BE AT THE DIRECTION OF THE VILLAGE ENGINEER.

Erosion Control Measures

1. ALL EROSION CONTROL MEASURES SHALL BE IN COMPLIANCE WITH THE LATEST REVISION OF THE STANDARDS AND SPECIFICATIONS FOR SOIL EROSION AND SEDIMENT CONTROL" BY IEPA-AND THE ILLINOIS URBAN MANUAL - A TECHNICAL MANUAL DESIGNED FOR URBAN ECOSYSTEM PROTECTION AND ENHANCEMENT, JUNE 2013 OR LATEST EDITION AND IN ACCORDANCE WITH THE EROSION CONTROL PLAN.
2. ALL EROSION CONTROL MEASURES MUST BE CHECKED BY THE DEVELOPER/CONTRACTOR ON A WEEKLY BASIS AND AFTER EVERY STORM OF ONE HALF INCH OF RAINFALL OR GREATER. ANY REPAIRS OR SEDIMENT REMOVAL NEEDED TO ENSURE ADEQUATE EROSION CONTROL MUST BE COMPLETED IMMEDIATELY, AT THE EXPENSE OF THE DEVELOPER/CONTRACTOR.
3. THE WORK SITE SHALL BE MASS GRADED TO PROVIDE FOR POSITIVE DRAINAGE AT ALL TIMES DURING CONSTRUCTION. FINAL GRADES SHALL BE PROTECTED FROM EROSION AND ACCUMULATION OF SEDIMENTS.

A. SOIL STABILIZATION
   1. EXISTING VEGETATION COVER AND TOPSOIL STRIP TOPSOIL AND REMOVE EXISTING VEGETATION. STOCKPILE ON-SITE FOR FUTURE RE-USE AT THE LOCATION DESIGNATED ON THE PLAN.
   2. TEMPORARY SEEDING TEMPORARY SEEDING SHALL BE PLACED WITHIN 15 DAYS TO ALL DISTURBED AREAS THAT ARE SCHEDULED TO REMAIN STRIPPED FOR MORE THAN 60 DAYS.
   3. PERMANENT SEEDING INSTALL PERMANENT SEEDING OR SOD IMMEDIATELY FOLLOWING THE FINISHED GRADING AND TOPSOIL PLACEMENT.
   4. SLOPE PROTECTION PROTECT ALL SEEDING ON SLOPES WITH MULCH, SECURED EXCELSIOR BLANKETS, OR EQUAL.

B. SEDIMENT CONTROL
   1. PROTECT ADJACENT PROPERTIES FROM ENCROACHING SEDIMENTS BY PRESERVING A VEGETATED BUFFER STRIP OR WITH SILTATION FENCING PLACED AROUND THE PERIMETER OF THE SITE.
   2. ALL STOCKPILE AREAS SHALL BE PROTECTED WITH EROSION BARRIERS AROUND THE PERIMETER OF THE STOCKPILE BASE.
   3. ALL NEWLY CONSTRUCTED STORM SEWER STRUCTURES SHALL BE PROVIDED WITH INLET FILTER BAGS.
   4. TEMPORARY ROCK CHECK DAMS, COIR LOGS (OR ALTERNATIVE APPROVED BY THE VILLAGE ENGINEER) SHALL BE PLACED A MINIMUM OF EVERY 250 IN ALL OVERLAND FLOOD SWALES, REAR YARD SWALES, OR OTHER LONGITUDINAL SWALES.
   5. ALL CONSTRUCTION TRAFFIC SHALL BE RESTRICTED TO ENTER AND LEAVE THE CONSTRUCTION SITE THROUGH ONE DESIGNATED STABILIZED CONSTRUCTION ACCESS ROAD. SAID STABILIZED CONSTRUCTION ACCESS SHALL CONSIST OF A MINIMUM 150 X 30 CRUSHED 3 STONE STRIP THAT IS INTENDED TO MINIMIZE THE TRACKING OF MUD ONTO STATE, COUNTY, TOWNSHIP, OR MUNICIPAL ROADWAYS. THE DEVELOPER/CONTRACTOR IS RESPONSIBLE FOR DAILY CLEANING OR THE ROADWAYS OR AS DIRECTED BY THE VILLAGE ENGINEER. WATER FLUSHING IS NOT AN ACCEPTABLE METHOD FOR REMOVAL OF DIRT AND DEBRIS FROM THE ROADWAYS.
   6. THE DEVELOPER/CONTRACTOR MUST REMOVE ALL EROSION CONTROL MEASURES WITHIN 30 DAYS OF FINAL SITE STABILIZATION.

Sanitary Sewer Construction

1. ALL SANITARY SEWER WORK SHALL BE CONSTRUCTED IN ACCORDANCE WITH THE APPLICABLE STANDARD SPECIFICATIONS FOR WATER AND SEWER MAIN CONSTRUCTION IN ILLINOIS LATEST EDITION.
2. ALL SANITARY SEWER CONSTRUCTION SHALL COMPLY WITH THE RULES AND REGULATIONS OF THE FOX METRO WATER RECLAMATION DISTRICT, AND THEIR GENERAL NOTES AND CONSTRUCTION DETAILS ARE TO BE APPENDED TO THE PLANS IN ADDITION TO THE VILLAGE NOTES AND DETAILS.
3. SANITARY SEWER MAINS SHALL HAVE A MINIMUM COVER OF 5.5 FEET AND SHALL BE INSTALLED IN A STRAIGHT ALIGNMENT UNLESS SPECIFICALLY SHOWN OTHERWISE ON THE APPROVED PLANS. MINIMUM COVER MAY BE REDUCED, AT THE DISCRETION OF THE VILLAGE ENGINEER, PROVIDED THAT SATISFACTORY MEASURES ARE TAKEN TO INSULATE AND PROTECT THE PIPE.
4. ALL EXISTING UTILITIES AND IMPROVEMENTS, INCLUDING BUT NOT LIMITED TO WALKS, CURBS, PAVEMENT, LANDSCAPING, AND PARKWAYS, DAMAGED OR REMOVED BY CONSTRUCTION SHALL BE PROMPTLY RESTORED TO THEIR ORIGINAL (OR BETTER) CONDITION.
5. NON-SHEAR OR SIMILAR COUPLINGS APPROVED BY THE VILLAGE ENGINEER SHALL BE USED WHEN JOINING SEWER PIPES OF DISSIMILAR MATERIALS.
6. ALL NEW SANITARY SEWER MAINS SHALL HAVE WYES INSTALLED FOR PROPOSED BUILDING SERVICES. SAID WYES SHALL BE INSTALLED IN THE SAME DIRECTION AS THE MAIN FLOW DIRECTION. ALL SERVICE CONNECTIONS TO EXISTING SANITARY SEWER MAINS NOT HAVING WYES SHALL BE MADE WITH AN INSERT-A-TEE TYPE FITTING OR OTHER SIMILAR APPROVED EQUAL FITTING.
7. ALL TRENCHES UNDER OR WITHIN 2 FEET OF A PROPOSED SIDEWALK, CURB, PATHWAY, OR ROADWAY MUST BE BACKFILLED WITH PROPERLY COMPACTED CA-7 TRENCH BACKFILL.
8. ALL TRENCHES UNDER OR WITHIN 2 FEET OF AN EXISTING SIDEWALK, CURB, PATHWAY, OR ROADWAY MUST BE BACKFILLED WITH AN IDOT APPROVED MIX #2 DESIGN OF CONTROLLED LOW STRENGTH MATERIAL (I.E. CLSM OR FLOWABLE FILL) DISPENSED FROM A REDI-MIX TRUCK UP TO THE SUB-GRADE LEVEL. SAID CLSM SHALL BE FLUID ENOUGH TO FILL ALL VOIDS AND UNDERMINES. UPON PLACEMENT OF THE CLSM, THE TRENCH SHALL BE PROPERLY PROTECTED WITH BARRICADES AND PLATED WITH APPROPRIATE STEEL PLATES TO MINIMIZE TRAFFIC DISRUPTION UNTIL THE CLSM HAS SUFFICIENTLY SET UP TO ALLOW FOR THE REMAINDER OF THE RESTORATION. ROADWAY RESTORATION SHALL BE COMPLETED IMMEDIATELY AFTER THE SETTING OF THE CLSM.
9. MATERIALS PERMITTED FOR USE IN SANITARY SEWER MAINS AND SERVICES ARE PVC SDR 26 ASTM D-3034 WITH ASTM D3212 JOINTS.
10. MANHOLES SHALL BE CONSTRUCTED OF PREFABRICATED CONCRETE SECTIONS MEETING THE REQUIREMENTS OF ASTM C-478. SECTIONS SHALL BE JOINED USING EITHER FLEXIBLE RUBBER GASKETS OR PREFORMED BITUMINOUS PLASTIC GASKETS. THE MANHOLE BOTTOM SHALL BE PRECAST WITH THE FIRST RISER SECTION. MANHOLES SHALL HAVE THE PIPE CAST IN PLACE THROUGH THE MANHOLE OR A WATERTIGHT JOINT CAST IN THE MANHOLE WALL TO RECEIVE THE PIPE. MANHOLE FRAMES AND LIDS SHALL BE OF SELF-SEALING TYPE NEENAH FOUNDRY COMPANY (CATALOG NO.R-1712 IN PAVEMENT, OR EQUAL WITH APPROVAL BY THE VILLAGE, WITH TYPE B LID AND CONCEALED PICK-HOLE WITH THE WORD "SANITARY" CAST IN THE LID.
11. ALL SANITARY SEWERS SHALL BE TESTED USING SEVERAL METHODS. INFILTRATION-EXFILTRATION SHALL NOT EXCEED 200-GALLONS/INCH DIAMETER/DAY/MILE OF PIPE. TESTING SHALL BE DONE AFTER THE SERVICE LINES HAVE BEEN INSTALLED AND CAPPED. TESTING PROCEDURES FOR WATER TIGHTNESS SHALL BE ESTABLISHED BY THE VILLAGE ENGINEER AND MAY INCLUDE INFILTRATION OR EXFILTRATION OR LOW PRESSURE AIR TESTING. MINIMUM TESTING PROCEDURE SHALL COMPLY WITH THE STANDARD SPECIFICATIONS FOR SEWER AND WATER MAIN CONSTRUCTION IN ILLINOIS SECTION 31-1.11. TESTING WILL ALSO INCLUDE TELEVISING IN COLOR (DVD FORMAT AND SUBMITTED TO THE VILLAGE FOR REVIEW) AND VACUUM TESTING OF MANHOLE STRUCTURES.
12. ALL SANITARY SEWERS SHALL BE TESTED FOR DEFLECTION USING A RIGID BALL OR MANDREL HAVING A DIAMETER EQUAL TO 95% OF THE BASE DIAMETER OF THE PIPE AS ESTABLISHED IN PROPOSED ASTMD-3034. THE TEST SHALL BE PERFORMED WITHOUT MECHANICAL PULLING DEVICES. THE INDIVIDUAL LINES TO BE TESTED SHALL BE SO TESTED NO SOONER THAN 30 DAYS AFTER THEY HAVE BEEN INSTALLED. WHENEVER POSSIBLE AND PRACTICAL, THE TESTING SHALL INITIATE AT THE DOWNSTREAM LINES AND PROCEED TOWARD THE UPSTREAM LINES. NO PIPE SHALL EXCEED A DEFLECTION OF 5% OF THE BASE INSIDE DIAMETER. WHERE DEFLECTION IS FOUND TO BE IN EXCESS OF 5% OF THE ORIGINAL PIPE DIAMETER, THE CONTRACTOR SHALL EXCAVATE TO THE POINT OF EXCESS DEFLECTION AND CAREFULLY COMPACT AROUND THE POINT WHERE EXCESS DEFLECTION WAS FOUND. THE LINE SHALL THEN BE RE-TESTED FOR DEFLECTION. HOWEVER, SHOULD AFTER THE INITIAL TESTING THE DEFLECTED PIPE FAIL TO RETURN TO THE ORIGINAL SIZE (INSIDE DIAMETER) THE LINE SHALL BE REPLACED.
13. GRANULAR PIPE BEDDING AND COVER MATERIAL SHALL EXTEND 12" ABOVE THE CROWN OF THE SANITARY SEWER MAIN. THE GRANULAR PIPE BEDDING MATERIAL SHALL BE CA-7, CLASS A1 CRUSHED STONE.

Storm Sewer Construction

1. ALL STORM SEWER WORK SHALL BE CONSTRUCTED IN ACCORDANCE WITH THE STANDARD SPECIFICATIONS FOR ROAD AND BRIDGE CONSTRUCTION IN ILLINOIS, LATEST EDITION.
2. ALL STORM SEWER STRUCTURE ADJUSTMENTS SHALL BE MADE WITH PRECAST CONCRETE ADJUSTING RINGS SET IN A FULL BED OF BUTYL ROPE JOINT SEALANT. THE RINGS MUST BE IN GOOD SHAPE WITH NO VISIBLE CRACKS OR MISSING PIECES, AND NO MORE THAN 8 INCHES OF ADJUSTING RINGS MAY BE USED. NO MORE THAN TWO 2 RINGS MAY BE USED.
3. ALL STORM SEWER STRUCTURES SHALL HAVE POURED INVERTS CONFORMING TO THE SHAPE OF THE PIPES.
4. ALL EXISTING FIELD DRAINAGE TILE ENCOUNTERED OR DAMAGED DURING UTILITY CONSTRUCTION OR MASS EARTHWORK MUST BE RESTORED TO THEIR ORIGINAL CONDITION, OR PROPERLY RE-ROUTED, OR IF FEASIBLE, CONNECTED INTO THE STORM SEWER SYSTEM. ALL LOCATIONS, SIZES, AND DEPTHS OF ENCOUNTERED FIELD TILE SHALL BE PROPERLY REFERENCED AND DOCUMENTED FOR THE RECORD AS- BUILT DRAWINGS.
5. ALL TRENCHES UNDER OR WITHIN 2 FEET OF A PROPOSED SIDEWALK, CURB, PATHWAY, OR ROADWAY MUST BE BACKFILLED WITH PROPERLY COMPACTED CA-7 TRENCH BACKFILL AND 12 CAP.
6. ALL TRENCHES UNDER OR WITHIN 2 FEET OF AN EXISTING SIDEWALK, CURB, PATHWAY, OR ROADWAY MUST BE BACKFILLED WITH AN IDOT APPROVED MIX #2 DESIGN OF CONTROLLED LOW STRENGTH MATERIAL (I.E. CLSM OR FLOWABLE FILL) DISPENSED FROM A REDI-MIX TRUCK UP TO THE SUB-GRADE LEVEL. SAID CLSM SHALL BE FLUID ENOUGH TO FILL ALL VOIDS AND UNDERMINES. UPON PLACEMENT OF THE CLSM, THE TRENCH SHALL BE PROPERLY PROTECTED WITH BARRICADES AND PLATED WITH APPROPRIATE STEEL PLATES TO MINIMIZE TRAFFIC DISRUPTION UNTIL THE CLSM HAS SUFFICIENTLY SET UP TO ALLOW FOR THE REMAINDER OF THE RESTORATION. ROADWAY RESTORATION SHALL BE COMPLETED IMMEDIATELY AFTER THE SETTING OF THE CLSM.
7. WHERE SHOWN ON THE PLANS, OR AS DIRECTED BY THE VILLAGE ENGINEER, EXISTING STORM SEWER STRUCTURES SHALL BE CLEANED OF DEBRIS/SEDIMENTS. ALL DRAINAGE STRUCTURES INSTALLED AS A PART OF THE IMPROVEMENTS SHALL BE MAINTAINED BY THE DEVELOPER/CONTRACTOR UNTIL THE IMPROVEMENTS ARE FINAL ACCEPTED BY THE VILLAGE.
8. ALL STORM SEWER CROSSING OVER WATER MAINS SHALL BE CONSTRUCTED OF EITHER REINFORCED CONCRETE PIPE WITH O-RING JOINTS CONFORMING TO ASTM C-443 STANDARDS, OR OTHER WATER MAIN CLASS PIPE AS APPROVED BY THE VILLAGE ENGINEER.

Water Main Construction

1. ALL WATER MAIN WORK SHALL BE CONSTRUCTED IN ACCORDANCE WITH THE APPLICABLE STANDARD SPECIFICATIONS FOR WATER AND SEWER MAIN CONSTRUCTION IN ILLINOIS LATEST EDITION.
2. WATER MAINS SHALL HAVE A MINIMUM COVER OF 5.5 FEET AND SHALL BE INSTALLED IN A STRAIGHT ALIGNMENT UNLESS SPECIFICALLY SHOWN OTHERWISE ON THE APPROVED PLANS. MINIMUM COVER MAY BE REDUCED, AT THE DISCRETION OF THE VILLAGE ENGINEER, PROVIDED THAT SATISFACTORY MEASURES ARE TAKEN TO INSULATE AND PROTECT THE PIPE.
3. ALL WATER MAINS SHALL BE CEMENT LINED DUCTILE IRON PIPE, CLASS 52 CONFORMING TO AWWA C-151 WITH PUSH-ON OR MECHANICAL JOINTS AND SHALL BE ENCASED IN POLYETHYLENE FILM IN ACCORDANCE WITH AWWA C-105-82. FITTINGS SHALL BE CEMENT LINED, TAR COATED CAST IRON WITH MECHANICAL JOINTS RATED 250 PSI PER AWWA C110/ANSI 21.20.
4. ALL PIPE AND FITTINGS SHALL BE MANUFACTURED IN THE UNITED STATES OR APPROVED EQUAL.
5. ALL MAIN LINE VALVES SHALL BE AMERICAN FLOW CONTROL TYPE GATE VALVES AND HOUSED IN A PRECAST CONCRETE VAULT OF THE APPROPRIATE SIZE.
6. ALL HYDRANTS SHALL BE WATEROUS PACER MODEL WB-67 250 OR CLOW MEDALLION TYPE AND INCLUDE A GATE VALVE IN A METAL BOX WITH BRACING AND TRENCH ADAPTER.
7. ALL CORPORATION STOPS SHALL BE "A Y MCDONALD" MODEL, COMPRESSION TYPE.
8. ALL CURB STOPS SHALL BE "A Y MCDONALD" MODEL.
9. ALL WATER MAINS SHALL BE PRESSURE TESTED AND DISINFECTED IN ACCORDANCE WITH THE STANDARDS AND PROCEDURES SET BY THE VILLAGE. MINIMUM TESTING PROCEDURE SHALL COMPLY WITH THE STANDARD SPECIFICATIONS FOR SEWER AND WATER MAIN CONSTRUCTION IN ILLINOIS SECTION 41-2.13 AND SECTION 41-2.14.
10. ONLY VILLAGE STAFF IS ALLOWED TO OPERATE VALVES AND HYDRANTS. A MINIMUM OF 24 HOURS ADVANCE NOTICE MUST BE GIVEN TO THE VILLAGE PUBLIC WORKS DEPARTMENT FOR THE OPERATION OF VALVES AND HYDRANTS.

Protection of Water Main and Water Service Lines

WATER MAINS AND WATER SERVICE LINES SHALL BE PROTECTED FROM SANITARY SEWERS, STORM SEWERS, COMBINED SEWERS, SEWER SERVICE LINES, AND DRAIN TILES AS FOLLOWS:

A. WATER MAINS

1. HORIZONTAL SEPARATION
   - A. WATER MAINS SHALL BE LAID AT LEAST TEN FEET HORIZONTALLY FROM ANY EXISTING OR PROPOSED SANITARY SEWER, STORM SEWER, COMBINED SEWER, SEWER SERVICE, AND DRAIN TILE.
   - B. WATER MAINS MAY BE LAID CLOSER THAN TEN FEET TO A SEWER LINE WHEN:
     - I. LOCAL CONDITIONS PREVENT A LATERAL SEPARATION OF TEN FEET.
     - II. THE WATER MAIN INVERT IS AT LEAST 18 INCHES ABOVE THE CROWN OF THE SEWER; AND
     - III. THE WATER MAIN IS EITHER IN A SEPARATE TRENCH OR IN THE SAME TRENCH ON AN UNDISTURBED EARTH SHELF LOCATED TO ONE SIDE OF THE SEWER.
   - C. BOTH THE WATER MAIN AND SEWER/DRAIN SHALL BE CONSTRUCTED OF SLIP-ON OR MECHANICAL JOINT CAST OR DUCTILE IRON PIPE, PRE-STRESSED CONCRETE PIPE OR PVC PIPE MEETING THE REQUIREMENTS OF SECTION 653.111 WHEN SEWER SHALL BE PRESSURE TESTED TO THE MAXIMUM EXPECTED SURCHARGE HEAD BEFORE BACKFILLING.
2. VERTICAL SEPARATION
   - A. A WATER MAIN SHALL BE LAID SO THAT ITS INVERT IS 18 INCHES ABOVE THE CROWN OF THE SEWER OR DRAIN WHENEVER WATER MAINS CROSS STORM SEWERS, SANITARY SEWERS OR SEWER SERVICES. THE VERTICAL SEPARATION SHALL BE MAINTAINED FOR THAT PORTION OF THE WATER MAIN LOCATED WITHIN TEN FEET HORIZONTALLY OF ANY SEWER OR DRAIN CROSSED. A LENGTH OF WATER MAIN PIPE SHALL BE CENTERED OVER THE SEWER TO BE CROSSED WITH JOINTS EQUIDISTANT FROM THE SEWER OR DRAIN.
   - B. THE SEWER OR DRAIN SHALL BE CONSTRUCTED OF SLIP-ON OR MECHANICAL JOINT CAST OR DUCTILE IRON PIPE, PRE-STRESSED CONCRETE PIPE, (STORM SEWER ONLY), OR PVC PIPE MEETING THE REQUIREMENTS OF SECTION 653.111, OR THE SEWER OR DRAIN SHALL BE SLEEVED WITH STEEL PIPE OR CONSTRUCTED OF REINFORCED CONCRETE PIPE CONFORMING TO ASTM C-76 WITH GASKET JOINTS CONFORMING TO ASTM C-361 (STORM SEWERS ONLY) FOR A DISTANCE OF TEN FEET EITHER SIDE OF THE CONFLICT,
     - I. IT IS IMPOSSIBLE TO OBTAIN THE PROPER VERTICAL SEPARATION AS DESCRIBED IN A) ABOVE; OR
     - II. THE WATER MAIN PASSES UNDER A SEWER OR DRAIN
   - C. A VERTICAL SEPARATION OF 18 INCHES BETWEEN THE INVERT OF THE SEWER OR DRAIN AND THE CROWN OF THE WATER MAIN SHALL BE MAINTAINED WHERE A WATER MAIN CROSSES UNDER A SEWER. IN ADDITION, THE SEWER SHALL BE CONSTRUCTED OF WATER MAIN QUALITY PIPE. SUPPORT THE SEWER OR DRAIN LINES TO PREVENT SETTLING AND BREAKING THE WATER MAIN.
   - D. CONSTRUCTION SHALL EXTEND ON EACH SIDE OF THE CROSSING UNTIL THE NORMAL DISTANCE FROM THE WATER MAIN TO THE SEWER OR DRAIN LINE IS AT LEAST TEN FEET.

B. WATER SERVICE LINES
   1. THE HORIZONTAL AND VERTICAL SEPARATION BETWEEN WATER SERVICE LINES AND ALL STORM SEWERS, SANITARY SEWERS, COMBINED SEWERS, SANITARY SEWER SERVICES, OR ANY DRAIN TILES SHALL BE THE SAME AS WATER MAIN SEPARATION DESCRIBED IN (A) ABOVE.
   2. WATER PIPE DESCRIBED IN (A) ABOVE SHALL BE USED FOR SEWER SERVICE LINES WHEN MINIMUM HORIZONTAL AND VERTICAL SEPARATION CANNOT BE MAINTAINED

C. SPECIAL CONDITIONS

ALTERNATE SOLUTIONS SHALL BE PRESENTED TO THE AGENCY WHEN EXTREME TOPOGRAPHICAL, GEOLOGICAL, OR EXISTING STRUCTURAL CONDITIONS MAKE STRICT COMPLIANCE WITH (A) OR (B) ABOVE TECHNICALLY AND ECONOMICALLY IMPRACTICAL. ALTERNATE SOLUTIONS WILL BE APPROVED PROVIDED WATERTIGHT CONSTRUCTION STRUCTURALLY EQUIVALENT TO APPROVED WATER MAIN MATERIAL IS PROPOSED.

B. WATER MAINS SHALL BE SEPARATED FROM SEPTIC TANKS, DISPOSAL FIELDS AND SEEPAGE BEDS BY A MINIMUM OF 25 FEET.

C. WATER MAINS AND WATER SERVICE LINES SHALL BE PROTECTED AGAINST ENTRANCE OF HYDROCARBONS THROUGH DIFFUSION THROUGH ANY MATERIAL USED IN CONSTRUCTION OF THE LINE.

Legend

Drainage (Existing / Proposed)

- CONTOUR MAJOR (5') — 700
- CONTOUR MINOR (1') — 701
- STORM SEWER
- WETLAND
- CATCH BASIN
- DOWNSPOUT — DS
- FLARED END SECTION
- INLET
- STORM MANHOLE

Utility Lines (Existing / Proposed)

- CABLE TV — CTV
- COMBINED SEWER
- ELECTRIC — E
- FIBER OPTIC — FO
- FORCEMAIN — FM
- GAS — G
- OIL — O
- OVERHEAD WIRE — OHW
- SANITARY SEWER
- SANITARY SERVICE
- TELEPHONE — T
- WATER SERVICE — w
- WATER MAIN — W

Utility Structures (Existing / Proposed)

- AC UNIT — AC
- BUFFALO BOX
- CLEANOUT — CO
- CABLE TV SPLICE BOX — TV
- ELECTRIC METER — E
- ELECTRIC SPLICE BOX — E
- ELECTRIC VAULT / MANHOLE — E
- FIRE HYDRANT
- GAS METER — G
- GAS REGULATOR — G
- GAS VALVE — G
- HANDHOLE
- DOUBLE HANDHOLE
- LIFT STATION
- POWER POLE
- POWER POLE WITH TRANSFORMER
- SANITARY MANHOLE
- TELEPHONE JUNCTION BOX — T
- TELEPHONE POLE
- TELEPHONE SPLICE BOX — T
- ELECTRIC TRANSFORMER — E
- UNDERGROUND ELECTRIC VAULT/MANHOLE — E
- UNDERGROUND GAS VAULT/MANHOLE — G
- UNDERGROUND TELEPHONE VAULT/MANHOLE — T
- VALVE BOX
- VALVE VAULT

Utility Structure and Pipe Notation

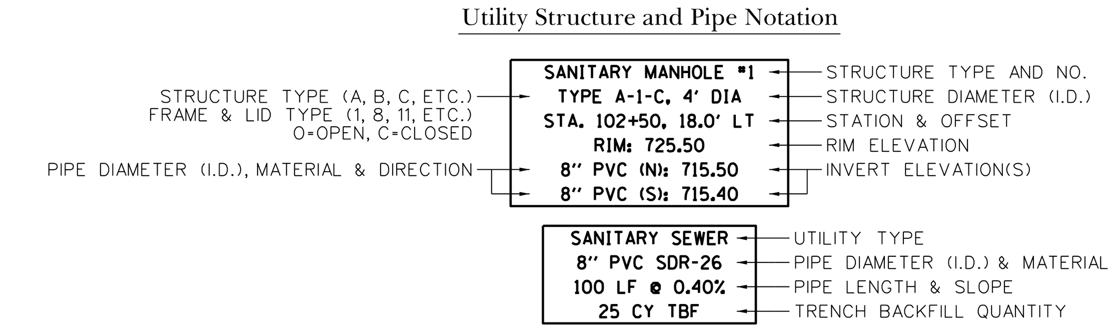

NOTE:

RIM ELEVATION, STATION/OFFSET AND/OR COORDINATES FOR UTILITY STRUCTURES ARE TAKEN AT THE CENTER OF THE LID/RIM.

RIM ELEVATION, STATION/OFFSET AND/OR COORDINATES FOR UTILITY STRUCTURES LOCATED WITHIN CURB & GUTTER ARE TAKEN AT THE BACK (TOP) OF CURB.

ISSUE	REVISIONS	DATE
5.	ISSUED FOR BIDDING	2/21/19
4.	PER VILLAGE OF OSWEGO, IDOT, FOX METRO	2/15/19
3.	REVISIONS PER VILLAGE OF OSWEGO REVIEW	1/11/19
2.	REVISIONS PER VILLAGE OF OSWEGO REVIEW	12/4/18
1.	REVISIONS PER VILLAGE OF OSWEGO REVIEW	11/21/18

PROJECT STAFF
PROJECT MANAGER:
ENGINEER:
ENGINEER:
ENGINEER:
TECHNICIAN:
TECHNICIAN:

TROTTER and ASSOCIATES, INC.
ENGINEERS AND SURVEYORS
40W201 Wasco Road, Suite D
St. Charles, IL 60175
Ph.: 630-587-0470 • Fax: 630-587-0475

The Reserve at Hudson Crossing - Roadway Improvements
Village of Oswego General Notes
Legend
Oswego, Kendall County, Illinois

Project No.: SH0002
File Name: 02_GEN.dgn
Issue Date: 2/21/2019
Scale: N.T.S.
Sheet Number
2

General Notes for Sanitary Sewer Construction in the Fox Metro Water Reclamation District

1. ALL SANITARY SEWER CONSTRUCTION SHALL BE PERFORMED IN ACCORDANCE WITH THE "FOX METRO WATER RECLAMATION DISTRICT SEWER USE ORDINANCE NO. 859", THE "STANDARD SPECIFICATIONS FOR WATER AND SEWER MAIN CONSTRUCTION IN ILLINOIS", AND "77 ILLINOIS ADMINISTRATIVE CODE, PART 890, ILLINOIS PLUMBING CODE", LATEST EDITION.
2. FINAL APPROVED SET OF PLANS AND SPECIFICATIONS MUST BE KEPT ON THE JOB SITE. FAILURE TO DO THIS MAY RESULT IN A FINE AND/OR BE CONSIDERED CAUSE TO STOP THE JOB.
3. CONTRACTORS FOR ALL SANITARY SEWER MAIN EXTENSION PROJECTS SHALL NOTIFY THE DISTRICT'S ENGINEERING DEPARTMENT TWENTY-FOUR (24) HOURS PRIOR TO THE START OF WORK. NOTIFICATION SHALL BE DONE VIA TELEPHONE AT (630) 301-6882, FAX AT (630) 897-6094 OR EMAIL (SMEDRANO@FOXMETRO.ORG OR MFRANKINO@FOXMETRO.ORG).
4. FOR SERVICE CONNECTION INSPECTIONS, CALL TWENTY-FOUR (24) HOURS IN ADVANCE TO SCHEDULE AN INSPECTION AT (630) 301-6811.
5. TO PREVENT ANY POSSIBLE INFILTRATION, INFLOW OR DEBRIS FROM ENTERING THE DOWNSTREAM SANITARY SYSTEM, A FACTORY MADE PLUG SHALL BE PLACED IN THE MANHOLE BY THE CONTRACTOR, AS INDICATED ON THE FINAL APPROVED PLANS. THE PLACEMENT OF THE PLUG(S) SHALL NOT INTERRUPT THE SERVICE OF ANY USER. THIS PLUG IS TO BE REMOVED ONLY UPON APPROVAL BY THE DISTRICT OR THE CITY/VILLAGE AND ONLY AFTER ANY CONSTRUCTION DRAINAGE AND/OR DEBRIS HAS BEEN PROPERLY REMOVED. UNDER NO CIRCUMSTANCES IS OVERLAND SURFACE DRAINAGE ALLOWED TO DRAIN INTO THE SANITARY SYSTEM.
6. ALL SANITARY SEWERS SHALL BE TESTED IN ACCORDANCE WITH SECTION 31-1.12 OF THE "STANDARD SPECIFICATIONS FOR WATER AND SEWER MAIN CONSTRUCTION IN ILLINOIS". IN ADDITION, ALL MANHOLES SHALL BE VACUUM TESTED (MANHOLE TESTING WILL BE IN ACCORDANCE WITH ASTM-1244-93 OR IN ACCORDANCE WITH DISTRICT REQUIREMENTS). IN CASE OF TESTING SPECIFICATION CONFLICT, WHERE DEEPER MANHOLES ARE CONSTRUCTED, THE MORE STRINGENT REQUIREMENT WILL APPLY.
7. WHEN CONNECTING TO AN EXISTING SANITARY MAIN WHEN A TEE OR WYE IS NOT PROVIDED, AN "INSERTA TEE" FITTING MUST BE INSTALLED. THE MINIMUM DISTANCE BETWEEN FITTINGS IS FOUR (4) FEET CENTER TO CENTER. INSTALLATION OF A WYE/TEE ON AN EXISTING MAIN IS PROHIBITED. THE ANGLE OF ANY NEW CONNECTION SHALL NOT EXCEED 1/1 OR 45 DEGREES.
8. ONLY "INFI-SHIELD", "ADAPTOR-SEAL" AND "WRAPID SEAL"OR APPROVED EQUAL CHIMNEY SEALS SHALL BE INSTALLED ON ALL MANHOLES AND GREASE REMOVAL SYSTEMS.
9. ONLY PVC TRANSITION FITTINGS SHALL BE USED IN ALL NEW CONSTRUCTION WHEN JOINING PVC PIPES WHICH ARE DAMAGED, DISTURBED DURING CONSTRUCTION OR HAVE DIFFERENT OUTSIDE DIAMETERS. REFER TO "FOX METRO MANHOLE/SEWER PIPE SPECIFICATIONS" FOR INFORMATION RELATING TO REPAIRS OF MAINS DAMAGED DURING CONSTRUCTION.
10. ALL EXISTING SANITARY INTERCEPTOR (MAINS 15" IN DIAMETER OR GREATER) MANHOLE FRAMES LOCATED WITHIN ANY PROPOSED DEVELOPMENT WILL BE REQUIRED TO BE ADJUSTED TO GRADE. UNDER NO CIRCUMSTANCES MAY THE VERTICAL HEIGHT OF THE ADJUSTING RINGS (TWO TOTAL) RINGS EXCEED EIGHT (8) INCHES EXTREME CARE SHOULD BE TAKEN WHEN WORKING NEAR ALL SANITARY MANHOLES.
11. CAST IRON CLEANOUT COVERS ARE REQUIRED IN AREAS RECEIVING TRAFFIC LOADS.
12. DUCTILE IRON AND CAST IRON PIPE IS NOT ALLOWED FOR THE USE OF GRAVITY SEWERS IN THE DISTRICT.
13. LANDSCAPING WITHIN ANY DISTRICT EASEMENT IS PROHIBITED WITHOUT REVIEW AND SUBSEQUENT PLAN APPROVAL. THE EASEMENT SHALL BE GRADED SO THAT THE GROUND SURFACE DOES NOT EXCEED A SIX (6) PERCENT GRADIENT IN ALL DIRECTIONS.
14. ALL BUILDING DRAINS/SEWERS SHALL BE OVERHEAD OR "HUNG" THROUGH THE BASEMENT WALL OF ANY NEW BUILDING. ALL SANITARY RISERS SHALL BE REQUIRED TO BE CONSTRUCTED TO A DEPTH OF NO GREATER THAN SIX (6) TO SEVEN (7) FEET AT THE RIGHT OF WAY. IF A CONFLICT ARISES BETWEEN A SANITARY SEWER AND A WATER LINE, IEPA WATER & SEWER SEPARATION REQUIREMENTS TAKE PRECEDENT.
15. WHETHER ANY GREASE REMOVAL SYSTEM IS NEWLY CONSTRUCTED OR "RETROFITTED" TO AN EXISTING BUILDING, A MINIMUM EACH OF 1% SLOPE AND 3.5' OF COVER FOR PIPES ARE REQUIRED.
16. MINIMUM DESIGN SLOPES SHALL BE 1.00% FOR SIX (6) INCH BUILDING SEWERS, .40% FOR EIGHT (8) INCH SEWERS, AND .28% FOR TEN (10) INCH SEWERS WITH ALL OTHER DESIGN SLOPES CONFORMING TO THE REQUIREMENTS OF THE "STANDARD SPECIFICATIONS FOR WATER AND SEWER MAIN CONSTRUCTION IN ILLINOIS".
17. ALL MANHOLE BARREL SECTIONS (INCLUDING THOSE SECTIONS OF EXISTING MANHOLES WHICH HAVE BEEN EXPOSED DURING CONSTRUCTION) SHALL BE REQUIRED TO BE EXTERNALLY SEALED WITH A *6" OR **9" WIDE (MIN.) SEALING BAND OF RUBBER AND MASTIC. THE BAND SHALL HAVE AN OUTER LAYER OF RUBBER OR POLYETHYLENE WITH AN UNDER LAYER OF RUBBERIZED MASTIC (WITH A PROTECTIVE FILM), MEETING THE REQUIREMENTS OF ASTM C-877, **TYPE II OR *TYPE III.
18. ALL SAGS, LEAKS, PIPE DEFECTS, OR OTHER RELATED ISSUES WITH ANY NEWLY TELEVISED SEWER SHALL BE REPAIRED BY THE CONTRACTOR AT THE DISCRETION OF THE DISTRICT. FOR APPROVAL OF REPAIRS, THESE AREAS WILL NEED TO BE CONFIRMED IN WRITING AS COMPLETED BY THE APPROPRIATE MUNICIPALITY OR RE-TELEVISED BY THE DISTRICT. AT THE DISTRICT'S DISCRETION, CONNECTION PERMITS MAY BE WITHHELD IF CONFIRMATION OF COMPLETED REPAIRS CANNOT BE OBTAINED.
19. ANY CONTRACTOR, WHO CONSISTENTLY FAILS TO PERFORM IN ACCORDANCE WITH THE DISTRICT'S STANDARDS AND SPECIFICATIONS AS PROVIDED ON THE PLANS, MAY BE PROHIBITED FROM PERFORMING WORK IN THE DISTRICT. THE DISTRICT RESERVES THE RIGHT TO REVOKE OR DISALLOW ANY CONTRACTOR'S BOND.
20. THE DISTRICT SHALL TELEVISE ALL SEWERS EIGHT (8) INCHES IN DIAMETER OR GREATER. IN ORDER TO ACCESS EACH MANHOLE, THE DEVELOPER IS RESPONSIBLE FOR PROVIDING A SMOOTH, LEVEL AREA OF SUFFICIENT WIDTH ALONG THE SANITARY SEWER SYSTEM. IF THE SEWERS ARE FOUND NOT TO BE CLEAN DURING TELEVISING, THE DEVELOPER MAY INCUR ADDITIONAL CHARGES IF PROPER ACCESS TO ALL MANHOLES IS NOT PROVIDED AND/OR FOR HEAVY CLEANING OF SEWERS BY THE DISTRICT'S CONTRACTOR.
21. FULL-SIZED CLEANOUTS ARE REQUIRED ON ALL BUILDING SEWERS AND SHALL BE INSTALLED AT A MINIMUM DEPTH OF FOUR (4) FEET RIM TO INVERT.

Contractor Notice

THE FOLLOWING LIST REPRESENTS COSTLY PROBLEMS OR VIOLATIONS THAT COMMONLY OCCUR DURING OR AFTER CONSTRUCTION. OUR GOAL IS TO MAKE EVERYONE AWARE OF THESE PROBLEMS & HOPEFULLY REDUCE UNNECESSARY DELAYS, EXPENSES, AND FINES.

IN ORDER TO PERFORM NEW CONSTRUCTION OR REPAIR WORK ON ANY PRIVATE SANITARY OR WATER SERVICE, THE FOLLOWING MUST BE COMPLETED BEFORE WORK MAY COMMENCE:

*A $25,000 LICENSE & PERMIT BOND MADE OUT TO "FOX METRO WATER RECLAMATION DISTRICT" MUST BE RECEIVED & APPROVED FOR NEW CONSTRUCTION OR REPAIR WORK.

*A DISTRICT PERMIT FOR NEW CONSTRUCTION OR A REPAIR PERMIT IS REQUIRED.

*AN INSPECTION IS REQUIRED BY THE DISTRICT. TO SAVE A $50 SAME DAY INSPECTION FEE, PLEASE PROVIDE TWENTY-FOUR (24) HOUR NOTICE.

1. ALL PUBLIC SANITARY SEWER CONSTRUCTION MUST HAVE AN IEPA PERMIT & PLAN APPROVAL LETTER ON FILE AT THE DISTRICT PRIOR TO COMMENCING. PLEASE PROVIDE OUR OFFICE WITH 48-HOUR NOTIFICATION TO VERIFY THIS BEFORE STARTING CONSTRUCTION. IF CONSTRUCTION DOES NOT COMMENCE WITHIN TWO (2) DAYS OF THE INITIAL NOTICE, START NOTIFICATION MUST BE RESUBMITTED.
2. TO PREVENT UNNECESSARY FLOW OR DISCHARGE INTO THE EXISTING SANITARY SYSTEM, ALL NEW SANITARY CONSTRUCTION MUST BE SECURELY PLUGGED AND MAINTAINED BY THE CONTRACTOR. THE PLUG(S) MAY ONLY BE REMOVED AFTER PERMISSION HAS BEEN OBTAINED FROM THE MUNICIPALITY OR THE DISTRICT'S ENGINEERING DEPARTMENT. ALL CONSTRUCTION DRAINAGE MUST BE PROPERLY REMOVED FROM THE NEW SANITARY SEWER SYSTEM.
3. ALL PRIVATE BUILDING SEWER CONNECTIONS MUST HAVE A CONNECTION PERMIT FROM THE DISTRICT. IN ADDITION, THIS WORK SHALL BE INSPECTED BY THE DISTRICT. PLEASE CALL (630) 301-6811 TO SCHEDULE INSPECTIONS TWENTY-FOUR (24) HOURS FROM STARTING CONSTRUCTION. NO BUILDING SEWERS SHALL BE INSTALLED UNTIL ALL PROPOSED PUBLIC SEWERS HAVE BEEN TESTED AND APPROVED BY THE DISTRICT & A FINAL RECORDED SUBDIVISION PLAT IS SUBMITTED.
4. ALL DOMESTIC WATER SERVICE INSTALLATIONS (EXCEPT FOR THE VILLAGE OF OSWEGO & THE UNITED CITY OF YORKVILLE) ARE TO BE INSPECTED BY THE DISTRICT. ANY/ALL FINAL CONNECTIONS TO ANY BUILDING, MADE BY ANY PLUMBER OR EXCAVATOR, SHALL ALSO BE INSPECTED BY THE DISTRICT. DO NOT BACKFILL THIS CONNECTION BEFORE THIS INSPECTION IS COMPLETED.
5. ALL SANITARY MANHOLES ARE TO BE SEALED (EXTERIOR OF CHIMNEY & BARRELS) & VACUUM TESTED. ANY DISRUPTION OF THESE MANHOLES WILL BREAK THE SEAL(S), REQUIRING A COSTLY RESEALING AND RETESTING PROCESS. PLEASE STAY CLEAR OF ALL MANHOLES.
6. DUCTILE IRON & CAST IRON PIPE IS NOT ALLOWED FOR THE USE OF GRAVITY SEWERS IN THE DISTRICT.

FOR QUESTIONS REGARDING PERMITTING & CONSTRUCTION, CALL THE DISTRICT'S ENGINEERING DEPARTMENT AT (630) 301-6882. FOR QUESTIONS REGARDING INSPECTIONS OR TO REPORT VIOLATIONS, OPEN MANHOLES, OR OTHER ISSUES PLEASE CALL (630) 301-6811.

Fox Metro Water Reclamation Distruction Manhole / Sewer Pipe Materials and Installation Specifications

1. PIPE FITTINGS

PIPE FITTINGS USED IN SANITARY SEWER CONSTRUCTION SHALL BE POLYVINYL CHLORIDE (PVC) PIPE. PVC PIPE PIPE & FITTING DATED OVER ONE-YEAR-OLD SHALL NOT BE PERMITTED FOR USE. NO SOLVENT-WELDED JOINTS SHALL BE ALLOWED OUTSIDE OF THE FOUNDATION WALL OF ANY BUILDING. THE TYPES OF PVC PIPE AND FITTINGS THAT SHALL BE USED IN THE DISTRICT INCLUDE:

-POLY VINYL CHLORIDE (PVC) SEWER PIPE AND FITTINGS (ASTM - SDR SERIES), CONFORMING TO ASTM NUMBERS D-1784 (CELL CLASSIFICATION), D-3034, D-3212 (JOINT SPEC), AND F-477 (GASKETS).
-POLY VINYL CHLORIDE (PVC) PRESSURE RATED PIPE AND FITTINGS (ASTM - SDR SERIES), CONFORMING TO ASTM NUMBERS D-1784 (CELL CLASSIFICATION), D-2241, D-3139 (JOINTSPEC), AND F-477 (GASKETS).
-POLY VINYL CHLORIDE (PVC) PRESSURE RATED PIPE AND FITTINGS (AWWA DR-SERIES) CONFORMING TO AWWA C-900, AWWA C-905, AND ASTM NUMBERS D-1784 (CELL CLASSIFICATION), D-3139 (JOINT SPEC), F-477 & F-913 (GASKETS)

ALL PVC PLASTIC PIPE & FITTINGS SHALL HAVE A CELL CLASSIFICATION OF 12454 AS DEFINED IN ASTM D-1784 & SHALL HAVE MINIMUM PIPE STIFFNESS AS SHOWN BELOW IN TABLE 1. THE REQUIRED STANDARD DIMENSION RATIO (SDR) OR DIMENSION RATIO (DR) PVC PIPE & FITTINGS SHALL BE SELECTED BASED UPON THE DEPTH OF COVER, AS SHOWN IN THE TABLE BELOW:

DEPTH OF COVER	PIPE DIAMETER	MINIMUM THICKNESS	NATIONAL STANDARD	MINIMUM PIPE STIFFNESS
3.5' - < 15'	6" - 12"	SDR 26	ASTM D-3034	115
3.5' - < 20'	6" - 12"	SDR 21	ASTM D-2241	224
3.5' - < 30'	6" - 12"	DR-18	AWWA C-900	364
3.5' - < 30'	14"	DR-18	AWWA C-905	364

FITTINGS IN SIZES THROUGH TWELVE (12) INCHES SHALL HAVE ELASTOMERIC JOINTS AND MINIMUM SOCKET DEPTHS AS SPECIFIED IN EACH RESPECTIVE SECTION. FITTINGS ABOVE TWELVE (12) INCHES SHALL BE MOLDED OR FABRICATED WITH ELASTOMERIC JOINTS IN ACCORDANCE WITH ASTM STANDARDS D-1784 AND D-3139 INCORPORATING THE MANUFACTURER'S STANDARD PIPE BELLS AND GASKETS. GASKETS SHALL CONFORM TO ASTM F-477 AND ASTM F-913.

THE DISTRICT RESERVES THE RIGHT TO APPROVE/REJECT ALL PIPE AND FITTINGS ON A CASE-BY-CASE BASIS.

2. BEDDING, HAUNCHING AND INITIAL BACKFILL

BEDDING MATERIAL SHALL BE CA-7 CLASS 1A, AS OUTLINED IN ASTM D-2321 & SHALL BE CERTIFIED BY THE MANUFACTURER & APPROVED BY THE DISTRICT PRIOR TO INSTALLATION , TO HAVE THE FOLLOWING CHARACTERISTICS:
-DESCRIPTION: SHALL BE CRUSHED STONE OR CRUSHED GRAVEL, AS PRODUCED BY MECHANICAL MEANS.
-GRADATION: SHALL MEET THE IDOT GRADATION OF CA-7, CLASS 1A.
-PLASTICITY INDEX: SHALL MEET A PLASTICITY INDEX OF 0 TO 4 PERCENT AS DETERMINED BY THE METHOD GIVEN IN AASHTO T 90.
-SPECIFIC GRAVITY: SHALL HAVE A SPECIFIC GRAVITY (DRY) OF GREATER THAN 2.45.

LABORATORY TEST

THE DISTRICT RESERVES THE RIGHT TO REQUIRE A CONTRACTOR TO SUBMIT CERTIFIED COPIES OF ALL REPORTS OF TESTS CONDUCTED BY AN INDEPENDENT LABORATORY BEFORE INSTALLATION OF PVC PLASTIC PIPE. TESTS SHALL BE CONDUCTED IN ACCORDANCE WITH STANDARD METHOD OF TEST FOR "EXTERNAL LOADING PROPERTIES OF PLASTIC PIPE BY PARALLEL-PLATE LOADING" PER ASTM D-2412.

PIPE INSTALLATION & FIELD TESTING

1. INSTALLATION

-IF THE INVERT OF ANY OVERHEAD SEWER EXCEEDS TWO (2) FEET ABOVE THE FOOTING, PLATE COMPACTION OF THE CA-7 CLASS 1A AGGREGATE SHALL BE REQUIRED IN TWELVE (12) INCH LIFTS.
-TRENCH WIDTHS SHOULD BE STABLE OR SUPPORTED, PROVIDE A WIDTH SUFFICIENT, BUT NO GREATER THAN NECESSARY TO ENSURE WORKING ROOM TO PROPERLY & SAFELY PLACE HAUNCHING & OTHER EMBEDMENT MATERIALS. THE MINIMUM TRENCH WIDTH SHALL BE 32" PLUS THE OUTSIDE DIAMETER OF THE PIPE & THE MAXIMUM TRENCH WIDTH SHALL BE 48" PLUS THE OUTSIDE DIAMETER OF THE PIPE.
-PIPE SIZE SHALL BE A MINIMUM OF EIGHT (8) INCHES FOR PUBLIC SEWERS & SIX (6) INCHES FOR BUILDING SEWERS.
-PIPES SHALL BE LAID IN A MANNER WHICH PROVIDES UNIFORM SUPPORT OVER THE ENTIRE LENGTH. NO BLOCKING OF ANY KIND SHALL BE USED TO ADJUST THE PIPE TO GRADE EXCEPT WHEN EMBEDMENT CONCRETE IS USED. BEDDING SHALL BE A MINIMUM OF SIX (6) INCHES IN DEPTH. THE BEDDING MATERIAL SHALL BE PLACED & WORKED IN AROUND PIPE BY HAND TO PROVIDE UNIFORM SUPPORT, THEN AROUND & OVER THE CROWN OF THE PIPE BY A MINIMUM OF TWELVE (12) INCHES. THE GRANULAR EMBEDMENT MATERIAL SHALL BE PLACED & CONSOLIDATED ALONG THE FULL WIDTH OF THE TRENCH. THE CONTRACTOR SHALL BE REQUIRED TO INSTALL THE PIPE IN SUCH A MANNER THAT THE DIAMETRIC DEFLECTION OF THE PIPE SHALL NOT EXCEED FIVE (5) PERCENT.
-PVC TRANSITION FITTINGS SHALL BE USED IN ALL NEW CONSTRUCTION WHEN JOINING PVC PIPES OF DIFFERENT OUTSIDE DIMENSIONS.
-SERVICE CONNECTIONS TO NEW MAINS SHALL BE WITH A TEE/WYE FITTING WITH A SIX (6) INCH BRANCH AND SHALL CONNECT TO THE MAIN AT A (MAX.) FORTY-FIVE (45) DEGREE ANGLE. WHERE NO TEE/WYE EXISTS, AN INSERTA TEE BRAND FITTING SHALL BE REQUIRED.
-CAST IRON CLEAN OUT COVERS CONFORMING TO ASTM A-48 CLASS 30 OR EQUIVALENT SHALL BE REQUIRED FOR ALL SANITARY SEWER SERVICES LOCATED IN ANY PAVED SURFACE. LOCATIONS OF SAID COVERS SHALL BE LIMITED TO A SPACING OF NO GREATER THAN ONE HUNDRED (100) FEET OR THAT CONSTRUCTED PER THE APPROVED ENGINEERING PLAN.
-THE USE OF DUCTILE IRON & CAST IRON PIPE IS NOT ALLOWED FOR THE USE OF GRAVITY SEWERS IN THE DISTRICT.
-EITHER 4" X 6" RUBBER OR NON-SHEAR COUPLINGS SHALL BE USED TO CONNECT THE BUILDING DRAIN TO THE BUILDING SEWER. IF USING A RUBBER FITTING, THE FOUR-INCH PIPE SHALL BE INSERTED SIX TO TWELVE INCHES INSIDE OF THE SIX INCH BUILDING SEWER.
-WHETHER ANY GREASE REMOVAL SYSTEM (GRS) IS NEWLY CONSTRUCTED OR RETROFITTED TO AN EXISTING BUILDING, ALL DISTRICT GUIDELINES PERTAINING TO MINIMUM SLOPE & COVER DEPTH FOR SANITARY CONSTRUCTION SHALL BE STRICTLY ADHERED TO.
-ALL BUILDING DRAINS/SEWERS SHALL BE OVERHEAD OR "HUNG" THROUGH THE WALL OF ANY BASEMENT.
-FULL-SIZED CLEANOUTS SHALL BE INSTALLED FIVE (5) FEET FROM THE FOUNDATION WALL.

2. TESTING

-BEFORE FINAL ACCEPTANCE, ALL PUBLIC SEWERS SHALL BE TESTED IN ACCORDANCE WITH SECTION 31-1.12 OF THE STANDARD SPECIFICATIONS FOR WATER & SEWER MAIN CONSTRUCTION IN ILLINOIS (*SEE ITEM #2 UNDER "MANHOLE INSTALLATION AND FIELD TESTING" BELOW FOR VACUUM TESTING).
-ALL PIPELINES CONSTRUCTED OF POLYVINYL CHLORIDE (PVC) SHALL BE SUBJECT TO AIR EXFILTRATION, DEFLECTION, VACUUM & TELEVISING TESTS.
-THE DEFLECTION TEST SHALL BE PERFORMED NO SOONER THAN THIRTY (30) DAYS OF THE BACKFILLING OPERATION & SHALL CONSIST OF MEASURING THE PIPE FOR VERTICAL RING DEFLECTION. MAXIMUM RING DEFLECTION OF THE PIPELINE UNDER LOAD SHALL BE LIMITED TO FIVE (5) PERCENT OF THE INTERNAL PIPE DIAMETER. ALL PIPES EXCEEDING THIS DEFLECTION SHALL BE CONSIDERED TO HAVE REACHED THE LIMIT OF ITS SERVICEABILITY & SHALL BE RE-LAID OR REPLACED BY THE CONTRACTOR AT THEIR SOLE EXPENSE.
-THE COST OF ALL DEFLECTION TESTING SHALL BE BORNE BY THE CONTRACTOR AND SHALL BE ACCOMPLISHED BY PULLING A MANDREL, SPHERE, OR PIN-TYPE "GO / NO GO" DEVICE, WITH A DIAMETER EQUAL TO NINETY-FIVE (95) PERCENT OF THE UN-DEFLECTED INSIDE DIAMETER OF THE FLEXIBLE PIPE THROUGH THE PIPELINE. PIPE SHALL BE CONSTRUCTED SO THAT THE INTERNAL DIAMETER DOES NOT DECREASE BY MORE THAN FIVE (5) PERCENT.
-ALL SANITARY SEWER (PUBLIC OR PRIVATE) HAVING A DIAMETER OF EIGHT (8) INCHES OR GREATER SHALL BE TELEVISED BY THE DISTRICT. SAID TELEVISING WORK IS SCHEDULED ONCE ALL SANITARY TESTING (AIR & VACUUM) HAS BEEN RECEIVED BY THE DISTRICT. ANY DEFECTS IN SAID SEWER SHALL BE REQUIRED TO BE EXCAVATED AND REPAIRED AT THE CONTRACTOR S OR DEVELOPER S SOLE EXPENSE. CAUTION SHOULD BE TAKEN BEFORE CONSTRUCTING ROADS, CURBS, SIDEWALKS OR ANY OTHER INFRASTRUCTURE, WHETHER IT IS ABOVE OR BELOW THE GROUND SURFACE. IT IS THE RESPONSIBILITY OF THE UTILITY CONTRACTOR AND THE DEVELOPER TO CONTACT THE DISTRICT PRIOR TO INSTALLING ANY OF THESE UTILITIES OR INFRASTRUCTURE. REPAIRS TO DEFECTIVE SANITARY SEWERS SHALL BE PERFORMED REGARDLESS OF THE STATUS OF OTHER CONSTRUCTION OR EXTRANEOUS EXPENSES.

MANHOLE INSTALLATION & FIELD TESTING

1. INSTALLATION

-ALL MANHOLE CASTINGS, ADJUSTING RINGS & MANHOLE SECTIONS SHALL BE SET IN BUTYL ROPE OR APPROVED EQUAL. THE INSIDE JOINTS OF MANHOLE SECTIONS, ADJUSTING RINGS, & FRAME SHALL NOT BE MORTARED. HOWEVER, THE AREA BETWEEN THE PIPE AND FLOW CHANNEL SHALL BE FILLED WITH CEMENT MORTAR TO PROVIDE A FLUSH SMOOTH SURFACE.
-EACH MANHOLE CONE & BARREL SECTION JOINT SHALL ALSO BE EXTERNALLY SEALED WITH A *6" OR **9" WIDE (MIN.) SEALING BAND OF RUBBER & MASTIC (SEE REPAIRS BELOW). THE BAND SHALL HAVE AN OUTER LAYER OF RUBBER OR POLYETHYLENE WITH AN UNDER LAYER OF RUBBERIZED MASTIC (WITH A PROTECTIVE FILM), MEETING THE REQUIREMENTS OF ASTM C-877, **TYPE II OR *TYPE III.
-PIPE CONNECTIONS TO ALL MANHOLES THROUGH OPENINGS (CAST OR CORE-DRILLED) SHALL BE PROVIDED WITH A FLEXIBLE RUBBER WATERTIGHT CONNECTOR CONFORMING TO ASTM C-923, "STANDARD SPECIFICATIONS FOR RESILIENT CONNECTORS BETWEEN REINFORCED CONCRETE MANHOLE STRUCTURES AND PIPES".
-A MAXIMUM OF EIGHT (8) INCHES OF ADJUSTING RINGS (2 TOTAL RINGS) IS ALLOWED. THE FRAME, CHIMNEY, & TOP "LIP" OF THE CONE SECTION SHALL BE REQUIRED TO BE SEALED WITH A CHIMNEY SEAL.
-ONLY "ADAPTOR-SEAL", "INFI-SHIELD", CANUSA (WRAPID SEAL), OR AN APPROVED EQUAL WILL BE ALLOWED. DO NOT USE UNAPPROVED SEALS.
-WHEN A NEW MANHOLE IS APPROVED TO BE CONSTRUCTED ON AN EXISTING PUBLIC SEWER, ONLY CASCADE BRAND (CR STYLE), OR APPROVED EQUAL, STAINLESS STEEL REPAIR CLAMPS SHALL BE INSTALLED. ONLY REPAIR CLAMPS CONFORMING TO ANSI/NSF-61 SHALL BE ALLOWED. THIS WORK SHALL BE INSPECTED BY THE DISTRICT.

2. TESTING

-EACH NEW MANHOLE SHALL BE VACUUM TESTED AFTER MANHOLE IS AT FINISHED GRADE. ALL LIFT HOLES SHALL BE PLUGGED WITH A NON-SHRINKING GROUT. THE MANHOLE FRAME, ADJUSTING RINGS AND CHIMNEY SEALS SHALL BE IN PLACE WHEN TESTING. NO GROUT SHALL BE PLACED IN THE HORIZONTAL JOINTS BEFORE, AFTER OR DURING TESTING IN ORDER TO ACHIEVE A PASSING TEST RESULT. ALL PIPES ENTERING THE MANHOLE SHALL BE PLUGGED, TAKING CARE TO SECURELY BRACE THE PLUGS FROM BEING DRAWN INTO THE MANHOLE. A VACUUM OF TEN (10) INCHES OF MERCURY SHALL BE DRAWN AND THE VACUUM PUMP SHUT OFF. WITH THE VALVES CLOSED, THE TIME SHALL BE MEASURED FOR THE VACUUM TO DROP TO NINE (9) INCHES OF MERCURY (HG) FOR THE FOLLOWING TIME PERIODS FOR EACH SIZE MANHOLE:

*FORTY-EIGHT (48) INCHES DIAMETER - SIXTY (60) SECONDS
*SIXTY (60) INCHES DIAMETER - SEVENTY-FIVE (75) SECONDS
*SEVENTY-TWO (72) INCHES DIAMETER - NINETY (90) SECONDS
*MANHOLE TESTING WILL BE IN ACCORDANCE WITH ASTM-1244-93 OR IN ACCORDANCE WITH DISTRICT REQUIREMENTS. IN CASE OF CONFLICT , THE MORE STRINGENT REQUIREMENT WILL APPLY (E.G. WHERE DEEPER MANHOLES ARE CONSTRUCTED).

THE CONTRACTOR SHALL PROVIDE ALL MATERIAL & EQUIPMENT NECESSARY FOR TESTING. SHOULD THE MANHOLE FAIL THE VACUUM TEST, THE STRUCTURE SHALL BE DISASSEMBLED TO A POINT THAT SAID LEAK CAN BE REPAIRED WITH BUTYL ROPE. AFTER THE REPAIR IS COMPLETE, THE MANHOLE SHALL BE RE-TESTED UNTIL A SATISFACTORY RESULT IS OBTAINED.

REPAIRS & REHABILITATION OF EXISTING PIPES & MANHOLES

1. PIPES

-PIPE CONNECTIONS OF DISSIMILAR MATERIALS WHERE NO HUB EXISTS SHALL BE MADE WITH A NON-SHEAR CONNECTOR.
-WHERE A NEW HOME IS CONSTRUCTED ON ANY LOT WHERE THE SANITARY SERVICE IS MADE OF RIGID MATERIALS SUCH AS VITRIFIED CLAY, CAST IRON, OR DUCTILE IRON, SAID SERVICE WILL BE REQUIRED TO BE REMOVED OR LINED TO THE PUBLIC MAIN. ANY EXISTING SANITARY SEWER MAIN OR SERVICE, WHICH IS REQUIRED TO BE LINED, SHALL BE REPAIRED WITH A CURED-IN-PLACE PIPE (CIPP) MEETING THE REQUIREMENTS OF ASTM F-1216, D-5813, D-790 & D-2990. SAID CIPP SHALL BE INSTALLED USING THE INVERSION METHOD ONLY. HOT WATER OR STEAM SHALL BE USED TO CURE ALL LINERS.
-BUILDING SEWERS SHALL BE PERMANENTLY ABANDONED USING ONE OF FOLLOWING TWO METHODS.

1.) REMOVED TO WITHIN ONE (1) FOOT OF THE PUBLIC SEWER & PLUGGED USING A MECHANICAL PLUG & MORTAR. THIS IS THE REQUIRED METHOD. IF THIS IS NOT FEASABLE, SEE ITEM 2 BELOW.

2.) THE INCOMING BUILDING SEWER SHALL BE SEALED WITHIN THE PUBLIC SEWER WITH A FOUR (4) FOOT MINIMUM LENGTH CURED IN PLACE PIPE (C.I.P.P.) LINER WITH HYDROPHILIC GASKETS.

-WHERE A NEWLY CONSTRUCTED PUBLIC SEWER NEEDS TO BE REPAIRED DUE TO DAMAGE HAVING OCCURRED DURING CONSTRUCTION, CASCADE BRAND (CR STYLE), OR APPROVED EQUAL, STAINLESS STEEL REPAIR CLAMPS SHALL BE REQUIRED. ONLY REPAIR CLAMPS CONFORMING TO ANSI/NSF-61 SHALL BE ALLOWED. WHEN THE DAMAGE OCCURS WITHIN THIRTY (30) FEET OF A MANHOLE, THE CONTRACTOR SHALL REMOVE AND REPLACE THE DAMAGED MAIN FROM THE NEAREST JOINT TO THE MANHOLE.

2. MANHOLES

-EACH MANHOLE, WHICH HAS BEEN DISTURBED IN ANY WAY, INCLUDING BEING RAISED OR LOWERED, SHOULD BE CLEANED & DRIED BEFORE RE-SEALING. EACH CONE & BARREL SECTION JOINT SHALL REQUIRE A DOUBLE-LAYER OF BUTYL ROPE & ALSO BE EXTERNALLY SEALED WITH A *6" OR **9" WIDE (MIN.) SEALING BAND OF RUBBER & MASTIC. THE BAND SHALL HAVE AN OUTER LAYER OF RUBBER OR POLYETHYLENE WITH AN UNDER LAYER OF RUBBERIZED MASTIC (WITH A PROTECTIVE FILM), MEETING THE REQUIREMENTS OF ASTM C-877, **TYPE II OR *TYPE III.
-A MAXIMUM OF EIGHT (8) INCHES OF ADJUSTING RINGS (2 TOTAL RINGS) IS ALLOWED IN ANY REPAIR. THE FRAME & CHIMNEY OF THE CONE SECTION SHALL BE REQUIRED TO BE SEALED WITH A CHIMNEY SEAL. ONLY "ADAPTOR-SEA", "INFI-SHIELD", CANUSA (WRAPID SEAL), OR APPROVED EQUAL WILL BE ALLOWED.

ISSUE	REVISIONS	DATE
5.	ISSUED FOR BIDDING	2/21/19
4.	PER VILLAGE OF OSWEGO, IDOT, FOX METRO	2/15/19
3.	REVISIONS PER VILLAGE OF OSWEGO REVIEW	1/11/19
2.	REVISIONS PER VILLAGE OF OSWEGO REVIEW	12/4/18
1.	REVISIONS PER VILLAGE OF OSWEGO REVIEW	11/21/18

PROJECT STAFF
PROJECT MANAGER:
ENGINEER:
ENGINEER:
ENGINEER:
TECHNICIAN:
TECHNICIAN:

TROTTER and ASSOCIATES, INC.
ENGINEERS AND SURVEYORS
40W201 Wasco Road, Suite D
St. Charles, Il. 60175
Ph.: 630-587-0470 • Fax: 630-587-0475

The Reserve at Hudson Crossing - Roadway Improvements

Fox Metro Water Reclamation District General Notes

Oswego, Kendall County, Illinois

Project No.: SH0002
File Name: 03_GEN.dgn
Issue Date: 2/21/2019
Scale: N.T.S.
Sheet Number
3

Summary of Quantities

DEMOLITION / REMOVAL / ABANDONMENT

SP	CODE NO	ITEM	UNIT	TOTAL QUANTITY
	20100110	TREE REMOVAL (6 TO 15 UNITS DIAMETER)	UNIT	197
	20100210	TREE REMOVAL (OVER 15 UNITS DIAMETER)	UNIT	344
	44000100	PAVEMENT REMOVAL	SQ YD	7,055
	44000200	DRIVEWAY PAVEMENT REMOVAL	SQ YD	81
	44000300	CURB REMOVAL	FOOT	31
	44000500	COMBINATION CURB AND GUTTER REMOVAL	FOOT	1,997
	44000600	SIDEWALK REMOVAL	SQ FT	5,559
	55100300	STORM SEWER REMOVAL 8"	FOOT	58
	55100500	STORM SEWER REMOVAL 12"	FOOT	604
	55100700	STORM SEWER REMOVAL 15"	FOOT	370
	55101200	STORM SEWER REMOVAL 24"	FOOT	37
	60500040	REMOVING MANHOLES	EACH	3
	60500050	REMOVING CATCH BASINS	EACH	7
	60500060	REMOVING INLETS	EACH	2
	72400100	REMOVE SIGN PANEL ASSEMBLY - TYPE A	EACH	12
*	X0120014	WATER MAIN ABANDONMENT	EACH	3
*	X0322936	REMOVE EXISTING FLARED END SECTION	EACH	3
*	X0326864	BRICK SIDEWALK REMOVAL	SQ FT	2,635
*	X0840000	SANITARY SEWER REMOVAL 8"	FOOT	343
*	X6026622	VALVE VAULTS TO BE REMOVED	EACH	5
*	Z0022800	FENCE REMOVAL	FOOT	266
*		FIRE HYDRANT TO BE REMOVED	EACH	3
*		REMOVE AND RELOCATE SIGN	EACH	4
*		ABANDON AND FILL EXISTING STORM SEWER	FOOT	45

EARTHWORK

SP	CODE NO	ITEM	UNIT	TOTAL QUANTITY
	20200100	EARTH EXCAVATION	CU YD	2,042
	20201200	REMOVAL AND DISPOSAL OF UNSUITABLE MATERIAL	CU YD	3,012
	20400800	FURNISHED EXCAVATION	CU YD	4,336
	20700220	POROUS GRANULAR EMBANKMENT	CU YD	6,900
*	21001000	GEOTECHNICAL FABRIC FOR GROUND STABILIZATION	SQ YD	7,491
	21301048	EXPLORATION TRENCH 48" DEPTH	FOOT	100

ROADWAY

SP	CODE NO	ITEM	UNIT	TOTAL QUANTITY
	35101500	AGGREGATE BASE COURSE, TYPE B	CU YD	1,103
	35501308	HOT-MIX ASPHALT BASE COURSE, 6"	SQ YD	6,391
	40600275	BITUMINOUS MATERIALS (PRIME COAT)	POUND	14,380
	40600290	BITUMINOUS MATERIALS (TACK COAT)	POUND	2,876
	40603085	HOT-MIX ASPHALT BINDER COURSE, IL-19.0, N50	TON	1,432
	40603340	HOT-MIX ASPHALT SURFACE COURSE, MIX "D", N50	TON	895
	42000201	PORTLAND CEMENT CONCRETE PAVEMENT 7" (JOINTED)	SQ YD	228
	42300400	PORTLAND CEMENT CONCRETE DRIVEWAY PAVEMENT, 8 INCH	SQ YD	74
	42400200	PORTLAND CEMENT CONCRETE SIDEWALK 5 INCH	SQ FT	19,768
	42400800	DETECTABLE WARNINGS	SQ FT	308
	60603800	COMBINATION CONCRETE CURB AND GUTTER, TYPE B-6.12	FOOT	4,030
	60605000	COMBINATION CONCRETE CURB AND GUTTER, TYPE B-6.24	FOOT	189
	72000100	SIGN PANEL - TYPE 1	SQ FT	60
	72800100	TELESCOPING STEEL SIGN SUPPORT	FOOT	150
	78008200	POLYUREA PAVEMENT MARKING TYPE I - LETTERS AND SYMBOLS	SQ FT	86
	78008210	POLYUREA PAVEMENT MARKING TYPE I - LINE 4"	FOOT	2,689
	78008270	POLYUREA PAVEMENT MARKING TYPE I - LINE 24"	FOOT	91
*	X0326863	BRICK SIDEWALK	SQ FT	4,003
*	X0326864	BRICK SIDEWALK (PARK)	SQ FT	3,980
*	Z0004510	HOT-MIX ASPHALT DRIVEWAY PAVEMENT, 3"	SQ YD	87
*		REINSTALL SALVAGED BRICK SIDEWALK	SQ FT	415
*		BRICK PAVEMENT	SQ YD	191
*		CLASS D PATCH, SPECIAL, 3"	SQ YD	532
*		CLASS D PATCH, SPECIAL, 12.5"	SQ YD	204
*		HOT-MIX ASPHALT BIKE PATH	SQ YD	91
*		DECORATIVE SIGN POLE	FOOT	24

SANITARY SEWER

SP	CODE NO	ITEM	UNIT	TOTAL QUANTITY
*		SANITARY MANHOLE, TYPE A, 4' DIAMETER, TYPE 1 FRAME, CLOSED LID	EACH	13
*		SANITARY MANHOLE, TYPE C, 4' DIAMETER, TYPE 1 FRAME, CLOSED LID	EACH	1
*		SANITARY SEWER, PVC, SDR-26, 8"	FOOT	42
*		SANITARY SEWER, PVC, SDR-26, 10"	FOOT	662
*		SANITARY SEWER, PVC, SDR-26, 12"	FOOT	1,348
*		STEEL CASING, JACK AND BORE, 30"	FOOT	105
*		GREASE INTERCEPTOR - 1,500 GALLON	EACH	1
*		SANITARY SERVICE, PVC, 6"	FOOT	92

STORM SEWER

SP	CODE NO	ITEM	UNIT	TOTAL QUANTITY
	54213657	PRECAST REINFORCED CONCRETE FLARED END SECTIONS 12"	EACH	1
	54213663	PRECAST REINFORCED CONCRETE FLARED END SECTIONS 18"	EACH	1
	54213669	PRECAST REINFORCED CONCRETE FLARED END SECTIONS 24"	EACH	1
	60200205	CATCH BASINS, TYPE A, 4'-DIAMETER, TYPE 1 FRAME, CLOSED LID	EACH	2
	60200805	CATCH BASINS, TYPE A, 4'-DIAMETER, TYPE 8 GRATE	EACH	2
	60201005	CATCH BASINS, TYPE A, 4'-DIAMETER, TYPE 10 FRAME AND GRATE	EACH	4
	60201105	CATCH BASINS, TYPE A, 4'-DIAMETER, TYPE 11 FRAME AND GRATE	EACH	9
	60207605	CATCH BASINS, TYPE C, TYPE 8 GRATE	EACH	1
	60207805	CATCH BASINS, TYPE C, TYPE 10 FRAME AND GRATE	EACH	4
	60207905	CATCH BASINS, TYPE C, TYPE 11 FRAME AND GRATE	EACH	5
	60218400	MANHOLES, TYPE A, 4'-DIAMETER, TYPE 1 FRAME, CLOSED LID	EACH	6
	550A0050	STORM SEWERS, CLASS A, TYPE 1 12"	FOOT	190
	550A0070	STORM SEWERS, CLASS A, TYPE 1 15"	FOOT	68
	550A0340	STORM SEWERS, CLASS A, TYPE 2 12"	FOOT	655
	550A0360	STORM SEWERS, CLASS A, TYPE 2 15"	FOOT	121
	550A0380	STORM SEWERS, CLASS A, TYPE 2 18"	FOOT	196
	550A0400	STORM SEWERS, CLASS A, TYPE 2 21"	FOOT	191
	550A0410	STORM SEWERS, CLASS A, TYPE 2 24"	FOOT	153
	550B0340	STORM SEWERS, CLASS B, TYPE 2 12"	FOOT	18
*		TRENCH DRAIN - PATIO	FOOT	42
*		TRENCH DRAIN - PAVEMENT	FOOT	20

WATER MAIN

SP	CODE NO	ITEM	UNIT	TOTAL QUANTITY
*	X5630706	CONNECTION TO EXISTING WATER MAIN 6"	EACH	1
*	X5630710	CONNECTION TO EXISTING WATER MAIN 10"	EACH	2
*	X5640175	FIRE HYDRANT COMPLETE	EACH	7
*	Z0067700	STEEL CASINGS 20"	FOOT	196
*	Z0067900	STEEL CASINGS 30"	FOOT	21
*		WATER MAIN, 8", DUCTILE IRON	FOOT	320
*		WATER MAIN, 10", DUCTILE IRON	FOOT	1,520
*		ADJUSTING WATER MAIN, SPECIAL, 12"	FOOT	36
*		WATER SERVICE LINE, SPECIAL, 1"	FOOT	90
*		VALVE VAULT, TYPE A, 5'-DIAMETER, TYPE 1 FRAME, CLOSED LID, 8" GATE VALVE	EACH	1
*		VALVE VAULT, TYPE A, 5'-DIAMETER, TYPE 1 FRAME, CLOSED LID, 10" GATE VALVE	EACH	6
*		VALVE VAULT, TYPE A, 5'-DIAMETER, TYPE 1 FRAME, CLOSED LID, 12" GATE VALVE	EACH	1
*		VALVE BOX, 10" GATE VALVE	EACH	2

UNDERGROUND ELECTRIC

SP	CODE NO	ITEM	UNIT	TOTAL QUANTITY
*		PRECAST CONCRETE TRANSFORMER PAD	EACH	2
*		PRECAST CONCRETE SWITCHGEAR PAD	EACH	1
*		ELECTRIC SPLICE BOX	EACH	1
*		CONNECTION TO UTILITY POLE	EACH	5
*		ELECTRIC CABLE IN CONDUIT, 500 CU - 400 AMP SECONDARY CABLE	FOOT	85
*		UNDERGROUND CONDUIT, PVC, 4" DIA	FOOT	73
*		UNDERGROUND CONDUIT, PVC, 6" DIA	FOOT	1,948

LIGHTING

SP	CODE NO	ITEM	UNIT	TOTAL QUANTITY
	20800150	TRENCH BACKFILL	CU YD	60
	81028210	UNDERGROUND CONDUIT, GALVANIZED STEEL, 2 1/2" DIA.	FOOT	300
	81028240	UNDERGROUND CONDUIT, GALVANIZED STEEL, 4" DIA.	FOOT	110
	81028710	UNDERGROUND CONDUIT, COILABLE NONMETALLIC CONDUIT, 3/4" DIA.	FOOT	350
	81028730	UNDERGROUND CONDUIT, COILABLE NONMETALLIC CONDUIT, 1 1/4" DIA.	FOOT	4000
	81028740	UNDERGROUND CONDUIT, COILABLE NONMETALLIC CONDUIT, 1 1/2" DIA.	FOOT	700
	81028750	UNDERGROUND CONDUIT, COILABLE NONMETALLIC CONDUIT, 2" DIA.	FOOT	525
	81028790	UNDERGROUND CONDUIT, COILABLE NONMETALLIC CONDUIT, 4" DIA.	FOOT	100
	83600200	LIGHT POLE FOUNDATION, 24" DIAMETER	FOOT	350
	84200500	REMOVAL OF LIGHTING UNIT, SALVAGE	EACH	17
	84200804	REMOVAL OF POLE FOUNDATION	EACH	11
*	84500110	REMOVAL OF LIGHTING CONTROLLER	EACH	1
*	84500120	REMOVAL OF ELECTRIC SERVICE INSTALLATION	EACH	1
*	84500130	REMOVAL OF LIGHTING CONTROLLER FOUNDATION	EACH	1
*	89502380	REMOVE EXISTING HANDHOLE	EACH	1
*	X0325815	REMOVE EXISTING CABLE	FOOT	1000
*	X1200139	REMOVAL OF LIGHTING LUMINAIRE, SALVAGE	EACH	2
*	X8140230	HANDHOLE, COMPOSITE CONCRETE (SPECIAL)	EACH	10
*	X8360215	LIGHT POLE FOUNDATION, 24" DIAMETER, OFFSET	FOOT	60
*	XX008195	EXPLORATION EXCAVATION (UTILITY)	FOOT	120
*	Z0033028	MAINTENANCE OF LIGHTING SYSTEM	CAL MO	9

LANDSCAPING

SP	CODE NO	ITEM	UNIT	TOTAL QUANTITY
*		TREE, ACER SACCHARUM 'CRESCENDO' (CRESCENDO SUGAR MAPLE), 3" CALIPER, BALLED AND BURLAPPED	EACH	2
*		TREE, GINKGO BILOBA 'AUTUMN GOLD' (AUTUMN GOLD GINKGO), 3" CALIPER, BALLED AND BURLAPPED	EACH	4
*		TREE, GYMNOCLADUS DIOICUS 'ESPRESSO' (ESPRESSO KENTUCKY COFFEE TREE), 4" CALIPER, BALLED AND BURLAPPED	EACH	2
*		TREE, PLATANUS ACERIFOLIA 'MORTON CIRCLE' (EXCLAMATION LONDON PLANETREE), 3" CALIPER, TREE FORM, BALLED AND BURLAPPED	EACH	3
*		TREE, TILIA CORDATA 'GREENSPIRE' (GREENSPIRE LINDEN), 3" CALIPER, BALLED AND BURLAPPED	EACH	2
*		TREE, HEPTACODIUM MICNOIDES (SEVEN SON FLOWER), 8' HEIGHT, CLUMP FORM, BALLED AND BURLAPPED	EACH	4
*		TREE, OSTRYA VIRGINIANA (AMERICAN HOPHORNBEAM), 3" CALIPER, BALLED AND BURLAPPED	EACH	5
*		EVERGREEN, TAXUS X MEDIA 'TAUNTONII' (TAUNTON YEW), 24", BALLED AND BURLAPPED	EACH	21
*		SHRUB, CORNUS STOLONIFERA 'ARCTIC FIRE' (ARCTIC FIRE DOGWOOD), CONTAINER GROWN, 7-GALLON	EACH	7
*		SHRUB, DIERVILLA LONICERA (DWARF BUSH HONEY SUCKLE), 5-GALLON	EACH	30
*		SHRUB, FOTHERGILLA GARDENII (DWARF FOTHERGILLA), 3-GALLON	EACH	5
*		SHRUB, HYDRANGEA ARBORESCENS 'INCREDIBALL' (INCREDIBALL HYDRANGEA), 5-GALLON	EACH	21
*		SHRUB, SYRINGA PATULA 'MISS KIM' (MISS KIM LILAC), 3' HEIGHT, BALLED AND BURLAPPED	EACH	7
*		SHRUB, VIBURNUM PRUNIFOLIUM (BLACKHAW VIBURNUM), 5' HEIGHT, BALLED AND BURLAPPED	EACH	3
*		SHRUB, VIBURNUM DENTATUM (ARROWWOOD VIBURNUM), 4' HEIGHT, BALLED AND BURLAPPED	EACH	15
*		PERENNIAL PLANTS, ALLIUM 'SUMMER BEAUTY' (SUMMER BEAUTY ONION), 1-GALLON	EACH	51
*		PERENNIAL PLANTS, CALAMAGROSTIS X ACUTIFLORA 'KARL FORESTER' (FEATHER REED GRASS), 3-GALLON	EACH	6
*		PERENNIAL PLANTS, CHASMANTHIUM LATIFOLIUM (NORTHERN SEA OATS), 1-GALLON	EACH	83
*		PERENNIAL PLANTS, CAREX MUSKINGUMENSIS 'OEHME' (OEHME PALM SEDGE), 1-GALLON	EACH	31
*		PERENNIAL PLANTS, HEMEROCALIS 'HAPPY RETURNS' (HAPPY RETURNS DAYLILY), 1-GALLON	EACH	166
*		PERENNIAL PLANTS, PANICUM VIRGATUM 'HEAVY METAL' (HEAVY METAL SWITCHGRASS), 3-GALLON	EACH	18
*		PERENNIAL PLANTS, SESLERIA AUTUMNALIS (AUTUMN MORE GRASS), 1-GALLON	EACH	128
*		PERENNIAL PLANTS, SPOROBOLUS HETEROLEPIS (PRAIRIE DROPSEED), 1-GALLON	EACH	12
*		MULCH PLACEMENT 3"	SQ YD	1,013

RESTORATION

SP	CODE NO	ITEM	UNIT	TOTAL QUANTITY
	21101615	TOPSOIL FURNISH AND PLACE, 4"	SQ YD	3,829
	25000110	SEEDING, CLASS 1A	ACRE	0.489
	25000314	SEEDING, CLASS 4B	ACRE	0.304
	25200110	SODDING, SALT TOLERANT	SQ YD	2,814

EROSION / SEDIMENT CONTROL

SP	CODE NO	ITEM	UNIT	TOTAL QUANTITY
	28000400	PERIMETER EROSION BARRIER	FOOT	1,787
	28000510	INLET FILTERS	EACH	32
	28001100	TEMPORARY EROSION CONTROL BLANKET	SQ YD	2,358

MISCELLANEOUS

SP	CODE NO	ITEM	UNIT	TOTAL QUANTITY
	50901760	PIPE HANDRAIL	FOOT	96
	67100100	MOBILIZATION	L SUM	1
*		REMOVE AND RESET MAILBOX	EACH	2
*		STREET LIGHT TO BE PAINTED	EACH	4
*		PORTLAND CEMENT CONCRETE STEPS	CU YD	5
*		SEGMENTAL CONCRETE BLOCK RETAINING WALL	SQ FT	778
*		BOLLARD	EACH	4
*		TRAFFIC CONTROL AND PROTECTION, SPECIAL	L SUM	1
		RAILROAD PROTECTIVE LIABILITY INSURANCE	L SUM	1

ALTERNATE #1 - LIGHTING CABLE AND FIXTURES

SP	CODE NO	ITEM	UNIT	TOTAL QUANTITY
	80400100	ELECTRIC SERVICE INSTALLATION	EACH	2
	81702110	ELECTRIC CABLE IN CONDUIT, 600V (XLP-TYPE USE) 1/C NO. 10	FOOT	3850
	81702120	ELECTRIC CABLE IN CONDUIT, 600V (XLP-TYPE USE) 1/C NO. 8	FOOT	4200
	81702130	ELECTRIC CABLE IN CONDUIT, 600V (XLP-TYPE USE) 1/C NO. 6	FOOT	15150
	81702140	ELECTRIC CABLE IN CONDUIT, 600V (XLP-TYPE USE) 1/C NO. 4	FOOT	2750
	81702180	ELECTRIC CABLE IN CONDUIT, 600V (XLP-TYPE USE) 1/C NO. 3/0	FOOT	630
	82500370	LIGHTING CONTROLLER, BASE MOUNTED, 240 VOLT, 200 AMP	EACH	2
*	X0324058	OUTLET SPECIAL	EACH	3
*	X0326498	GFCI 20 AMP DUPLEX RECEPTACLE	EACH	4
*	X0327141	LIGHTING STANDARD, TYPE 1	EACH	29
*	X0327142	LIGHTING STANDARD, TYPE 2	EACH	6
*	X1400238	LUMINAIRE, LED, SPECIAL	EACH	37

ALTERNATE #2 - HUDSON CROSSING PARK

SP	CODE NO	ITEM	UNIT	TOTAL QUANTITY
*	Z0022800	FENCE REMOVAL	FOOT	103
*		COLUMN REMOVAL	EACH	8
	42400800	DETECTABLE WARNINGS	SQ FT	156
*	X0326864	BRICK SIDEWALK (PARK)	SQ FT	3,980
*		REINSTALL SALVAGED BRICK SIDEWALK	SQ FT	824
*	84400105	RELOCATE EXISTING LIGHTING UNIT	EACH	3
*		TREE, TAXODIUM DISTICHUM (BALD CYPRESS), 4" CALIPER, BALLED AND BURLAPPED	EACH	2
*		TREE, CERCIDIPHYLLYM JAPONICUM (KATSURA TREE), 3" CALIPER, BALLED AND BURLAPPED	EACH	4
*		SHRUB, ILEX GLABRA 'SHAMROCK (SHAMROCK INKBERRY), 18" HEIGHT, BALLED AND BURLAPPED	EACH	8
*		MULCH PLACEMENT 3"	SQ YD	37
	50901760	PIPE HANDRAIL	FOOT	188
*		ORNAMENTAL FENCE	FOOT	112
*		STONE FENCE COLUMN	EACH	4
*		STONE ARCH COLUMN	EACH	2
*		INTEGRAL BARRIER WALL AND SIDEWALK	SQ FT	686
*		SEGMENTAL CONCRETE BLOCK RETAINING WALL	SQ FT	158

ISSUE	DATE	REVISIONS
5.	2/21/19	ISSUED FOR BIDDING
4.	2/15/19	PER VILLAGE OF OSWEGO, IDOT, FOX METRO
3.	1/11/19	REVISIONS PER VILLAGE OF OSWEGO REVIEW
2.	12/4/18	REVISIONS PER VILLAGE OF OSWEGO REVIEW
1.	11/21/18	REVISIONS PER VILLAGE OF OSWEGO REVIEW

PROJECT STAFF
PROJECT MANAGER:
ENGINEER:
ENGINEER:
ENGINEER:
TECHNICIAN:
TECHNICIAN:

TROTTER and ASSOCIATES, INC.
ENGINEERS AND SURVEYORS
40W201 Wasco Road, Suite D
St. Charles, IL 60175
Ph.: 630-587-0470 • Fax: 630-587-0475

The Reserve at Hudson Crossing - Roadway Improvements
Summary of Quantities
Oswego, Kendall County, Illinois

Project No.: SH0002
File Name: 04_S00.dgn
Issue Date: 2/21/2019
Scale: N.T.S.
Sheet Number
4

Pavement Removal

ALIGNMENT	STA. TO STA.	QUANTITY (SQ YD)
HARRISON STREET	8+06.81 TO 8+70.00	74
HARRISON STREET	10+22.03 TO 10+57.55	121
HARRISON STREET	10+57.55 TO 13+00.00	1,289
HARRISON STREET	13+00.00 TO 16+11.30	1,768
HARRISON STREET	16+11.67 TO 16+39.63	46
ADAMS STREET	20+22.06 TO 20+54.75	105
ADAMS STREET	20+54.75 TO 23+00.00	751
ADAMS STREET	23+00.00 TO 26+81.88	1,835
ADAMS STREET	26+81.88 TO 26+93.06	30
ADAMS STREET	26+93.06 TO 27+06.38	35
JACKSON STREET	200+08.60 TO 203+30.24	1,001
	TOTAL	7,055

Driveway Pavement Removal

LOCATION	STA	QUANTITY (SQ YD)
#19 ADAMS STREET	25+26.40	38
#13 AND #15 ADAMS STREET	26+02.53	43
	TOTAL	81

Sidewalk Removal

ALIGNMENT	STA. TO STA.	OFFSET	QUANTITY (SQ FT)
HARRISON STREET	4+92.44 TO 5+03.58	LT	55
HARRISON STREET	5+39.24 TO 5+49.24	LT	50
HARRISON STREET	7+06.98 TO 7+18.26	LT	55
HARRISON STREET	8+13.04 TO 8+22.81	LT	50
HARRISON STREET	8+54.62 TO 8+63.81	LT	45
HARRISON STREET	8+94.03 TO 9+00.07	LT	60
ADAMS STREET	23+09.63 TO 23+50.82	RT	413
ADAMS STREET	23+80.09 TO 26+81.34	RT	1,981
ADAMS STREET	23+86.90 TO 25+18.24	LT	653
ADAMS STREET	25+34.75 TO 26+81.99	LT	727
JACKSON STREET	202+35.55 TO 203+12.50	LT	264
WASHINGTON STREET	108+32.42 TO 110+84.55	LT	1,206
		TOTAL	5,559

Brick Sidewalk Removal

ALIGNMENT	STA. TO STA.	OFFSET	QUANTITY (SQ FT)
HARRISON STREET	10+24.59 TO 10+56.57	LT	200
HARRISON STREET	11+98.44	LT	111
HARRISON STREET	12+90.89	LT	109
HARRISON STREET	13+20.91 TO 14+12.91	LT	1,020
HARRISON STREET	14+46.11	LT	526
HARRISON STREET	15+96.81 TO 16+10.90	LT	115
ADAMS STREET	26+87.36	RT	300
WASHINGTON STREET	108+12.48 TO 108+32.42	LT	119
WASHINGTON STREET	110+84.55 TO 111+06.40	LT	135
		TOTAL	2,635

Combination Curb and Gutter Removal

ALIGNMENT	STA. TO STA.	OFFSET	QUANTITY (FOOT)
HARRISON STREET	4+92.44 TO 9+44.33	LT	516
HARRISON STREET	10+24.59 TO 103+00.00	LT	307
HARRISON STREET	10+24.31 TO 10+56.83	RT	51
HARRISON STREET	103+00.00 TO 14+29.10	LT	173
ADAMS STREET	20+24.62 TO 20+54.22	LT	49
ADAMS STREET	20+37.38 TO 20+54.62	RT	18
ADAMS STREET	22+25.43 TO 23+00.00	RT	90
ADAMS STREET	23+00.00 TO 23+50.82	RT	95
ADAMS STREET	23+78.91 TO 27+06.38	RT	385
ADAMS STREET	23+83.31 TO 26+81.99	LT	313
		TOTAL	1,997

Curb Removal

ALIGNMENT	STA. TO STA.	OFFSET	QUANTITY (FOOT)
HARRISON STREET	14+30.71 TO 14+61.66	LT	31
		TOTAL	31

Tree Removal (6 to 15 Units Diameter)

ALIGNMENT	STATION	OFFSET	QUANTITY (UNITS)
HARRISON STREET	14+15.94	15.71' RT	9
HARRISON STREET	15+92.64	26.49' LT	6
ADAMS STREET	24+02.47	46.06' LT	12
ADAMS STREET	24+25.87	41.74' LT	14
ADAMS STREET	24+58.67	21.11' LT	6
ADAMS STREET	24+92.70	20.90' LT	6
ADAMS STREET	25+60.20	169.50' LT	6
ADAMS STREET	25+62.88	19.76' LT	8
ADAMS STREET	25+63.13	169.38' LT	2x6
ADAMS STREET	25+84.68	173.03' LT	6
ADAMS STREET	25+88.60	169.34' LT	8
ADAMS STREET	26+13.76	173.22' LT	7
ADAMS STREET	26+37.70	26.33' LT	8
ADAMS STREET	26+46.89	161.41' LT	8
ADAMS STREET	26+53.57	32.37' LT	8
JACKSON STREET	201+86.76	28.81' LT	8
JACKSON STREET	202+16.85	30.99' LT	6
JACKSON STREET	202+74.67	26.21' LT	8
JACKSON STREET	202+94.46	26.13' LT	7
WASHINGTON STREET	108+61.50	39.35' LT	8
WASHINGTON STREET	109+07.00	39.37' LT	8
WASHINGTON STREET	109+46.74	38.91' LT	10
WASHINGTON STREET	109+89.17	39.60' LT	10
WASHINGTON STREET	110+38.81	39.87' LT	8
		TOTAL	197

Tree Removal (Over 15 Units Diameter)

ALIGNMENT	STATION	OFFSET	QUANTITY (UNITS)
HARRISON STREET	11+55.74	35.78' LT	18
HARRISON STREET	11+71.36	35.83' LT	22
HARRISON STREET	12+62.36	33.62' LT	22
HARRISON STREET	13+56.85	67.26' LT	16
ADAMS STREET	24+37.00	40.81' LT	18
ADAMS STREET	24+75.66	39.23' LT	2x20
ADAMS STREET	25+43.38	142.97' LT	16
ADAMS STREET	25+51.00	168.69' LT	30
ADAMS STREET	25+88.51	140.09' LT	40
ADAMS STREET	26+21.95	156.51' LT	20
ADAMS STREET	26+29.67	160.58' LT	18
ADAMS STREET	26+38.40	31.69' LT	2x18
ADAMS STREET	26+43.76	161.11' LT	20
JACKSON STREET	202+37.73	25.16' LT	28
		TOTAL	344

Street Light Removal

ALIGNMENT	STATION	OFFSET	QUANTITY (EACH)
HARRISON STREET	11+25.25	17.71' RT	1
HARRISON STREET	13+41.82	20.64' RT	1
HARRISON STREET	14+07.23	13.59' RT	1
HARRISON STREET	15+94.18	14.73' RT	1
ADAMS STREET	22+37.36	20.91' RT	1
ADAMS STREET	23+19.62	22.17' RT	1
ADAMS STREET	24+20.93	17.60' LT	1
ADAMS STREET	24+60.16	44.49' RT	1
ADAMS STREET	25+05.18	16.92' LT	1
ADAMS STREET	25+37.73	45.45' RT	1
ADAMS STREET	25+77.05	16.77' LT	1
ADAMS STREET	26+31.36	45.31' RT	1
ADAMS STREET	26+59.02	16.36' LT	1
ADAMS STREET	26+66.81	40.79' RT	1
JACKSON STREET	203+10.81	28.21' LT	1
		TOTAL	15

Remove and Relocate Street Light

ALIGNMENT	STATION	OFFSET	QUANTITY (EACH)
HARRISON STREET	13+16.92	16.97' LT	1
HARRISON STREET	14+08.68	26.29' LT	1
HARRISON STREET	14+98.42	28.97' RT	1
		TOTAL	3

Paint Existing Street Light

ALIGNMENT	STATION	OFFSET	QUANTITY (EACH)
WASHINGTON ST	108+34.17	36.09' LT	1
WASHINGTON ST	109+26.74	35.63' LT	1
WASHINGTON ST	110+02.64	36.04' LT	1
WASHINGTON ST	110+99.09	36.29' LT	1
		TOTAL	4

Sign Removal

ALIGNMENT	STATION	OFFSET	QUANTITY (EACH)
HARRISON STREET	12+41.58	34.26' LT	1
HARRISON STREET	13+04.51	33.60' LT	1
HARRISON STREET	14+34.71	40.16' LT	1
HARRISON STREET	14+51.83	39.87' LT	1
ADAMS STREET	20+44.58	14.63' LT	1
ADAMS STREET	23+33.93	20.22' RT	1
ADAMS STREET	24+03.20	16.17' RT	1
ADAMS STREET	24+05.75	31.89' RT	1
ADAMS STREET	24+07.22	18.16' LT	1
ADAMS STREET	26+64.81	15.44' RT	1
ADAMS STREET	26+80.35	14.28' RT	1
WASHINGTON STREET	108+75.71	37.73' LT	1
		TOTAL	12

Remove and Relocate Sign

ALIGNMENT	STATION	OFFSET	QUANTITY (EACH)
HARRISON STREET	10+38.32	22.07' RT	1
ADAMS STREET	20+39.78	21.04' LT	1
ADAMS STREET	23+33.05	27.99' RT	1
ADAMS STREET	24+05.59	26.60' LT	1
		TOTAL	4

Manhole Removal

ALIGNMENT	STATION	OFFSET	QUANTITY (EACH)
HARRISON STREET	5+01.68	20.85' LT	1
HARRISON STREET	8+45.07	23.66' LT	1
HARRISON STREET	13+63.96	32.06' LT	1
		TOTAL	3

Catch Basin Removal

ALIGNMENT	STATION	OFFSET	QUANTITY (EACH)
HARRISON STREET	7+17.16	17.60' LT	1
HARRISON STREET	13+70.42	15.77' LT	1
HARRISON STREET	14+27.99	6.93' LT	1
ADAMS STREET	26+41.21	21.10' RT	1
JACKSON STREET	201+72.60	25.52' LT	1
JACKSON STREET	203+28.01	29.25' RT	1
JACKSON STREET	203+57.72	37.79' RT	1
		TOTAL	7

Inlet Removal

ALIGNMENT	STATION	OFFSET	QUANTITY (EACH)
HARRISON STREET	13+09.04	30.73' LT	1
ADAMS STREET	26+62.03	18.50' RT	1
		TOTAL	2

Flared End Section Removal

ALIGNMENT	STATION	OFFSET	QUANTITY (EACH)
HARRISON STREET	7+09.16	55.46' LT	1
HARRISON STREET	10+66.20	26.12' RT	1
HARRISON STREET	10+69.39	26.76' RT	1
		TOTAL	3

Valve Vault Removal

ALIGNMENT	STATION	OFFSET	QUANTITY (EACH)
HARRISON STREET	5+44.24	19.20' LT	1
HARRISON STREET	11+04.13	11.62' RT	1
ADAMS STREET	23+87.40	2.07' RT	1
ADAMS STREET	24+15.56	0.54' RT	1
JACKSON STREET	203+62.34	10.31' LT	1
		TOTAL	5

Fire Hydrant Removal

ALIGNMENT	STATION	OFFSET	QUANTITY (EACH)
HARRISON STREET	10+93.59	15.79' RT	1
HARRISON STREET	13+43.59	15.63' RT	1
JACKSON STREET	203+02.19	23.14' LT	1
		TOTAL	3

Abandon and Fill Existing Storm Sewer

ALIGNMENT	STA. TO STA.	OFFSET	QUANTITY (FOOT)
HARRISON STREET	7+71.31 TO 7+85.73	LT	45
		TOTAL	45

Storm Sewer Removal, 8"

ALIGNMENT	STA. TO STA.	OFFSET	QUANTITY (FOOT)
HARRISON STREET	13+70.42 TO 14+27.99	LT	58
		TOTAL	58

Storm Sewer Removal, 12"

ALIGNMENT	STA. TO STA.	OFFSET	QUANTITY (FOOT)
HARRISON STREET	7+09.16 TO 7+17.16	LT	37
HARRISON STREET	13+09.04 TO 13+63.96	LT	55
HARRISON STREET	13+63.50 TO 13+70.42	LT	10
ADAMS STREET	26+41.21 TO 26+62.03	RT	21
ADAMS STREET	26+62.03 TO 26+99.87	RT	38
JACKSON STREET	199+84.23 TO 201+72.60	LT	200
JACKSON STREET	201+72.60 TO 203+84.50	LT	212
JACKSON STREET	203+28.01 TO 203+57.72	RT	31
		TOTAL	604

Storm Sewer Removal, 15"

ALIGNMENT	STA. TO STA.	OFFSET	QUANTITY (FOOT)
HARRISON STREET	7+85.73 TO 7+88.66	LT	10
JACKSON STREET	199+67.94 TO 203+28.01	RT	360
		TOTAL	370

Storm Sewer Removal, 24"

ALIGNMENT	STA. TO STA.	OFFSET	QUANTITY (FOOT)
HARRISON STREET	10+66.06	---	37
		TOTAL	37

Sanitary Sewer Removal, 8"

ALIGNMENT	STA. TO STA.	OFFSET	QUANTITY (FOOT)
HARRISON STREET	5+01.68 TO 8+45.07	LT	343
		TOTAL	343

Remove and Reset Mailbox

ALIGNMENT	STA. TO STA.	OFFSET	QUANTITY (EACH)
HARRISON STREET	7+65.93	18.83' LT	2
		TOTAL	2

Fence Removal

ALIGNMENT	STA. TO STA.	OFFSET	QUANTITY (FOOT)
HARRISON STREET	12+99.89 TO 13+55.30	LT	54
HARRISON STREET	13+73.22 TO 14+23.05	LT	49
ADAMS STREET	22+40.80 TO 23+18.20	RT	77
ADAMS STREET	24+62.38 TO 26+51.11	LT	189
		TOTAL	369

Column Removal

ALIGNMENT	STATION	OFFSET	QUANTITY (EACH)
HARRISON STREET	12+98.89	38.26' LT	1
HARRISON STREET	13+36.43	38.25' LT	1
HARRISON STREET	13+49.96	38.02' LT	1
HARRISON STREET	13+56.30	43.95' LT	1
HARRISON STREET	13+72.22	44.00' LT	1
HARRISON STREET	13+79.00	38.06' LT	1
HARRISON STREET	13+92.42	37.85' LT	1
HARRISON STREET	14+24.05	37.69' LT	1
		TOTAL	8

ISSUE	REVISIONS	DATE
5.	ISSUED FOR BIDDING	2/21/19
4.	PER VILLAGE OF OSWEGO, IDOT, FOX METRO	2/15/19
3.	REVISIONS PER VILLAGE OF OSWEGO REVIEW	1/11/19
2.	REVISIONS PER VILLAGE OF OSWEGO REVIEW	12/4/18
1.	REVISIONS PER VILLAGE OF OSWEGO REVIEW	11/21/18

PROJECT STAFF
PROJECT MANAGER:
ENGINEER:
ENGINEER:
ENGINEER:
TECHNICIAN:
TECHNICIAN:

TROTTER and ASSOCIATES, INC.
ENGINEERS AND SURVEYORS
40W201 Wasco Road, Suite D
St. Charles, IL 60175
Ph.: 630-587-0470 • Fax: 630-587-0475

The Reserve at Hudson Crossing - Roadway Improvements
Schedule of Quantities
Oswego, Kendall County, Illinois

Project No.: SH0002
File Name: 05_SCH_1.dgn
Issue Date: 2/21/2019
Scale: N.T.S.
Sheet Number
5

Proposed Roadway Pavement

ALIGNMENT	STA. TO STA.	CLASS D PATCH SPECIAL, 3″ (SQ YD)	CLASS D PATCH SPECIAL, 12.5″ (SQ YD)	AGGREGATE BASE COURSE TYPE B, 6″		HMA BASE COURSE, 6″ (SQ YD)	HMA BINDER COURSE IL-19.0, N50, 4″		HMA SURFACE COURSE MIX "D", N50, 2.5″		BITUMINOUS MATERIALS (TACK COAT) (LBS) (0.025 LB/SF)	BITUMINOUS MATERIALS (PRIME COAT) (LBS) (0.25 LB/SF)	PCC PAVEMENT 7″ (JOINTED) (SQ YD)	BRICK PAVEMENT (SQ YD)	NON-WOVEN GEOTEXTILE FABRIC (SQ YD)
				(SQ YD)	(CU YD)		(SQ YD)	(TON)	(SQ YD)	(TON)					
HARRISON STREET	5+00.00 TO 10+00.00	523	203	---	---	---	---	---	---	---	---	---	---	---	---
HARRISON STREET	10+00.00 TO 14+50.00	---	---	1,777	296	1,669	1,669	374	1,669	234	751	3,755	108	65	2,026
HARRISON STREET	14+50.00 TO 15+83.90	---	---	761	127	761	761	170	761	107	342	1,712	---	---	837
ADAMS STREET	20+00.00 TO 24+50.00	---	---	1,489	248	1,369	1,369	307	1,369	192	616	3,080	120	38	1,680
ADAMS STREET	24+50.00 TO 27+06.37	---	---	1,084	181	1,084	1,084	243	1,084	152	488	2,439	---	27	1,222
JACKSON STREET	200+00.00 TO 203+45.32	---	---	1,508	251	1,508	1,508	338	1,508	211	679	3,393	---	61	1,726
	TOTAL	523	203	6,619	1,103	6,391	6,391	1,432	6,391	895	2,876	14,380	228	191	7,491

Bollard

ALIGNMENT	STATION	OFFSET	QUANTITY (EACH)
HARRISON STREET	12+89.39	41.18′ RT	1
HARRISON STREET	13+11.39	41.18′ RT	1
ADAMS STREET	22+77.42	32.39′ LT	1
ADAMS STREET	22+98.41	33.07′ LT	1
		TOTAL	4

Comb. Conc. Curb and Gutter, Type B-6.12

ALIGNMENT	STA. TO STA.	OFFSET	QUANTITY (FOOT)
HARRISON STREET	4+92.44 TO 9+44.33	LT	516
HARRISON STREET	10+65.71 TO 14+50.00	LT	430
HARRISON STREET	10+65.71 TO 13+61.05	RT	347
HARRISON STREET	13+88.05 TO 14+50.00	RT	79
HARRISON STREET	14+50.00 TO 15+85.40	LT	150
HARRISON STREET	14+50.00 TO 15+85.40	RT	150
HARRISON STREET	15+85.40, 13.50′ LT TO 13.50′ RT		27
ADAMS STREET	20+62.82 TO 23+47.93	LT	303
ADAMS STREET	20+64.08 TO 23+50.83	RT	343
ADAMS STREET	23+76.30 TO 24+50.00	LT	91
ADAMS STREET	23+77.98 TO 24+50.00	RT	103
ADAMS STREET	24+50.00 TO 26+81.99	LT	232
ADAMS STREET	24+50.00 TO 27+06.05	RT	278
JACKSON STREET	200+43.53 TO 203+01.85	LT	300
JACKSON STREET	200+43.55 TO 203+00.44	RT	299
JACKSON STREET	200+56.82 TO 202+15.83	RT	159
JACKSON STREET	200+64.25 TO 202+86.90	LT	223
		TOTAL	4,030

Comb. Conc. Curb and Gutter, Type B-6.24

ALIGNMENT	STA. TO STA.	OFFSET	QUANTITY (FOOT)
HARRISON STREET	10+24.69 TO 10+65.71	LT	54
HARRISON STREET	10+24.31 TO 10+65.71	RT	55
ADAMS STREET	20+24.60 TO 20+62.82	LT	54
ADAMS STREET	20+37.38 TO 20+64.08	RT	26
		TOTAL	189

Hot-Mix Asphalt Bike Path

ALIGNMENT	STA. TO STA.	OFFSET	QUANTITY (SQ YD)
HARRISON STREET	15+85.40 TO 16+11.30	LT	45
HARRISON STREET	16+11.67 TO 16+39.63	LT	46
		TOTAL	91

Hot-Mix Asphalt Driveway Pavement, 3"

ALIGNMENT	STA. TO STA.	OFFSET	QUANTITY (SQ YD)
HARRISON STREET	13+00.39	RT	49
ADAMS STREET	22+87.85	LT	38
		TOTAL	87

PCC Driveway Pavement, 8"

ALIGNMENT	STA. TO STA.	OFFSET	QUANTITY (SQ YD)
HARRISON STREET	8+38.70	LT	74
		TOTAL	74

Class D Patch, Special, 3"

ALIGNMENT	STA. TO STA.	QUANTITY (SQ YD)
HARRISON STREET	4+92.44 TO 7+48.87	532
	TOTAL	532

Class D Patch, Special, 12.5"

ALIGNMENT	STA. TO STA.	QUANTITY (SQ YD)
HARRISON STREET	4+92.44 TO 9+44.33	204
	TOTAL	204

Integral Barrier Wall and Sidewalk

ALIGNMENT	STA. TO STA.	OFFSET	QUANTITY (SQ FT)
HARRISON STREET	14+36.40 TO 14+85.90	LT	686
		TOTAL	686

PCC Sidewalk, 5"

ALIGNMENT	STA. TO STA.	OFFSET	QUANTITY (SQ FT)
HARRISON STREET	4+92.44 TO 5+03.58	LT	55
HARRISON STREET	5+39.24 TO 5+49.24	LT	50
HARRISON STREET	7+06.98 TO 7+18.26	LT	55
HARRISON STREET	8+13.04 TO 8+22.81	LT	50
HARRISON STREET	8+54.62 TO 8+63.81	LT	45
HARRISON STREET	8+94.03 TO 9+00.07	LT	60
HARRISON STREET	10+27.80 TO 13+59.29	RT	2,561
HARRISON STREET	13+89.79 TO 14+50.00	RT	372
HARRISON STREET	14+50.00 TO 15+93.40	RT	999
ADAMS STREET	20+50.85 TO 23+47.93	LT	2,109
ADAMS STREET	22+06.94 TO 23+48.24	RT	880
ADAMS STREET	23+78.27 TO 24+50.00	LT	420
ADAMS STREET	23+80.00 TO 24+50.00	RT	426
ADAMS STREET	24+50.00 TO 26+81.99	LT	1,186
ADAMS STREET	24+50.00 TO 26+81.13	RT	1,394
JACKSON STREET	200+33.42 TO 203+12.51	LT	1,616
JACKSON STREET	200+33.42 TO 203+00.44	RT	1,675
WASHINGTON STREET	108+26.51 TO 111+07.47	LT	5,815
		TOTAL	19,768

Brick Sidewalk

ALIGNMENT	STA. TO STA.	OFFSET	QUANTITY (SQ FT)
HARRISON STREET	10+90.35 TO 11+30.35	RT	160
HARRISON STREET	13+28.00 TO 13+36.56	RT	46
ADAMS STREET	23+27.97 TO 23+31.97	RT	16
ADAMS STREET	23+30.61 TO 23+47.05	LT	177
ADAMS STREET	23+36.97 TO 23+45.56	RT	44
ADAMS STREET	23+82.86 TO 23+96.34	RT	85
ADAMS STREET	23+80.72 TO 23+96.30	LT	122
ADAMS STREET	24+01.34 TO 24+05.34	RT	16
JACKSON STREET	200+33.42 TO 200+38.42	LT	25
JACKSON STREET	200+33.42 TO 200+62.47	LT	485
JACKSON STREET	200+33.42 TO 200+72.30	RT	579
JACKSON STREET	202+17.61 TO 202+29.28	RT	151
JACKSON STREET	202+71.42 TO 203+12.49	LT	621
WASHINGTON STREET	108+22.31 TO 108+65.96	LT	398
WASHINGTON STREET	108+24.14 TO 111+10.45	LT	1,078
		TOTAL	4,003

Brick Sidewalk (Park)

ALIGNMENT	STA. TO STA.	OFFSET	QUANTITY (SQ FT)
HARRISON STREET	13+14.35 TO 14+36.40	LT	3,980
		TOTAL	3,980

Reinstall Salvaged Brick Sidewalk

ALIGNMENT	STA. TO STA.	OFFSET	QUANTITY (SQ FT)
HARRISON STREET	10+24.69 TO 10+56.01	LT	164
HARRISON STREET	11+93.61 TO 12+03.44	LT	120
HARRISON STREET	12+86.85 TO 12+94.87	LT	116
HARRISON STREET	14+37.37 TO 14+70.38	LT	424
HARRISON STREET	15+96.81 TO 16+10.90	LT	115
ADAMS STREET	26+81.77 TO 26+92.95	RT	300
		TOTAL	1,239

Segmental Concrete Block Retaining Wall

ALIGNMENT	STA. TO STA.	OFFSET	QUANTITY (SQ FT)
HARRISON STREET	10+50.50 TO 11+11.51	RT	511
HARRISON STREET	13+51.36 TO 13+63.36	LT	38
HARRISON STREET	13+87.35 TO 13+99.35	LT	38
HARRISON STREET	13+52.60 TO 13+64.60	LT	55
HARRISON STREET	13+84.60 TO 13+96.60	LT	55
WASHINGTON STREET	108+77.06 TO 109+69.00	LT	142
WASHINGTON STREET	109+78.14 TO 110+50.15	LT	97
		TOTAL	936

Detectable Warnings

ALIGNMENT	STATION	OFFSET	QUANTITY (SQ FT)
HARRISON STREET	8+16.99	30.98′ LT	12
HARRISON STREET	8+59.63	30.74′ LT	12
HARRISON STREET	8+97.04	19.27′ LT	10
HARRISON STREET	10+31.61	26.64′ RT	10
HARRISON STREET	10+32.32	26.06′ LT	10
HARRISON STREET	11+52.69	20.00′ RT	10
HARRISON STREET	11+98.52	32.00′ LT	18
HARRISON STREET	12+90.86	32.00′ LT	16
HARRISON STREET	13+39.08	15.00′ LT	10
HARRISON STREET	13+39.08	16.41′ RT	10
HARRISON STREET	13+55.97	30.90′ RT	10
HARRISON STREET	13+93.11	30.94′ RT	10
HARRISON STREET	14+10.08	15.00′ LT	10
HARRISON STREET	14+10.08	16.39′ RT	10
HARRISON STREET	14+60.90	32.00′ LT	92
ADAMS STREET	22+94.55	33.50′ RT	24
ADAMS STREET	23+32.99	20.11′ LT	10
ADAMS STREET	23+34.22	19.22′ RT	10
ADAMS STREET	23+43.56	30.21′ LT	10
ADAMS STREET	23+44.65	29.31′ RT	10
ADAMS STREET	23+81.70	30.33′ LT	10
ADAMS STREET	23+83.87	28.67′ RT	10
ADAMS STREET	23+98.81	16.21′ LT	10
ADAMS STREET	23+98.83	16.59′ RT	10
ADAMS STREET	26+87.44	15.06′ RT	20
JACKSON STREET	200+66.84	33.50′ LT	30
JACKSON STREET	200+85.34	33.50′ RT	30
JACKSON STREET	202+58.34	33.50′ LT	30
		TOTAL	464

Telescoping Steel Sign Support

ALIGNMENT	STATION	OFFSET	QUANTITY (FOOT)
HARRISON STREET	10+39.00	21.00′ LT	10
HARRISON STREET	10+95.35	22.00′ RT	10
HARRISON STREET	11+25.35	22.00′ RT	10
HARRISON STREET	11+62.69	31.00′ RT	10
HARRISON STREET	14+45.90	31.00′ LT	10
HARRISON STREET	14+61.90	31.00′ LT	10
HARRISON STREET	14+77.90	31.00′ LT	10
ADAMS STREET	20+40.00	21.00′ LT	10
ADAMS STREET	23+07.86	36.06′ RT	10
ADAMS STREET	23+25.00	16.00′ RT	10
ADAMS STREET	24+10.00	16.00′ LT	10
JACKSON STREET	200+40.00	16.00′ LT	10
JACKSON STREET	200+56.01	33.00′ LT	10
JACKSON STREET	200+56.02	31.00′ RT	10
JACKSON STREET	202+88.01	33.00′ LT	10
		TOTAL	150

Decorative Sign Pole

ALIGNMENT	STATION	OFFSET	QUANTITY (FOOT)
HARRISON STREET	14+00.00	15.00′ LT	12
HARRISON STREET	14+00.00	22.00′ RT	12
		TOTAL	24

Pipe Handrail

ALIGNMENT	STA. TO STA.	OFFSET	QUANTITY (FOOT)
HARRISON STREET	13+45.10 TO 13+64.60	LT	56
HARRISON STREET	13+84.60 TO 14+04.10	LT	56
HARRISON STREET	14+37.40 TO 14+84.90	LT	76
WASHINGTON STREET	108+65.97 TO 108+75.82	LT	31
WASHINGTON STREET	109+70.03 TO 109+77.14	LT	19
WASHINGTON STREET	109+77.14 TO 110+00.18	LT	46
		TOTAL	284

Polyurea Pavement Marking Type I

ALIGNMENT	STA. TO STA.	LINE (FOOT)		LETTERS & SYMBOLS (SQ FT)
		4″	24″	
HARRISON STREET	10+00.00 TO 14+50.00	673	16	3.1
HARRISON STREET	14+50.00 TO 15+85.40	534	---	9.3
ADAMS STREET	20+00.00 TO 24+50.00	221	27	3.1
ADAMS STREET	24+50.00 TO 27+06.37	445	12	---
JACKSON STREET	200+00.00 TO 203+45.32	816	36	70.5
	TOTAL	2,689	91	86.0

Sign Panel - Type 1

ALIGNMENT	TYPE	STATION	OFFSET	QUANTITY (SQ FT)
HARRISON STREET	R1-1	10+39.00	21.00′ LT	4.4
HARRISON STREET	R7-6	10+95.35	22.00′ RT	1.5
HARRISON STREET	R7-6	11+25.35	22.00′ RT	1.5
HARRISON STREET	R7-8	11+62.69	31.00′ RT	1.5
HARRISON STREET	R7-1 101	11+62.69	31.00′ RT	0.5
HARRISON STREET	R7-8	14+45.90	31.00′ LT	1.5
HARRISON STREET	R7-1 101	14+45.90	31.00′ LT	0.5
HARRISON STREET	R7-8	14+61.90	31.00′ LT	1.5
HARRISON STREET	R7-1 101	14+61.90	31.00′ LT	0.5
HARRISON STREET	JACKSON ST	14+00.00	15.00′ LT	5
HARRISON STREET	HARRISON ST	14+00.00	22.00′ RT	5
HARRISON STREET	JACKSON ST	14+00.00	22.00′ RT	5
HARRISON STREET	R7-8	14+77.90	31.00′ LT	1.5
HARRISON STREET	R7-1 101	14+77.90	31.00′ LT	0.5
ADAMS STREET	R1-1	20+40.00	22.00′ LT	4.4
ADAMS STREET	R7-8	22+96.77	33.25′ RT	1.5
ADAMS STREET	R7-1 101	22+96.77	33.25′ RT	0.5
ADAMS STREET	R1-1	23+25.00	16.00′ RT	4.4
ADAMS STREET	W4-4P	23+25.00	16.00′ RT	2
ADAMS STREET	R1-1	24+10.00	16.00′ LT	4.4
ADAMS STREET	W4-4P	24+10.00	16.00′ LT	2
JACKSON STREET	R1-1	200+40.00	16.00′ LT	4.4
JACKSON STREET	R7-8	200+67.15	32.25′ LT	1.5
JACKSON STREET	R7-1 101	200+67.15	32.25′ LT	0.5
JACKSON STREET	R7-8	200+85.65	32.25′ RT	1.5
JACKSON STREET	R7-1 101	200+85.65	32.25′ RT	0.5
JACKSON STREET	R7-8	202+58.07	32.25′ LT	1.5
JACKSON STREET	R7-1 101	202+58.07	32.25′ LT	0.5
			TOTAL	60

Ornamental Fence

ALIGNMENT	STA. TO STA.	OFFSET	QUANTITY (FOOT)
HARRISON STREET	12+98.89 TO 13+41.01	38.26′ LT	40
HARRISON STREET	13+41.01 TO 13+66.60	38.26′ LT	24
HARRISON STREET	13+66.60 TO 14+08.18	38.26′ LT	24
HARRISON STREET	14+08.18 TO 14+33.60	38.26′ LT	24
		TOTAL	112

Stone Fence Column

ALIGNMENT	STATION	OFFSET	QUANTITY (EACH)
HARRISON STREET	12+98.89	38.26′ LT	1
HARRISON STREET	13+41.01	38.26′ LT	1
HARRISON STREET	14+08.18	38.26′ LT	1
HARRISON STREET	14+33.60	38.26′ LT	1
		TOTAL	4

Stone Arch Column

ALIGNMENT	STATION	OFFSET	QUANTITY (EACH)
HARRISON STREET	13+66.60	38.26′ LT	1
HARRISON STREET	13+82.60	38.26′ LT	1
		TOTAL	2

ISSUE	REVISIONS	DATE
5.	ISSUED FOR BIDDING	2/21/19
4.	PER VILLAGE OF OSWEGO, IDOT, FOX METRO	2/15/19
3.	REVISIONS PER VILLAGE OF OSWEGO REVIEW	1/11/19
2.	REVISIONS PER VILLAGE OF OSWEGO REVIEW	12/4/18
1.	REVISIONS PER VILLAGE OF OSWEGO REVIEW	11/21/18

PROJECT STAFF
PROJECT MANAGER:
ENGINEER:
ENGINEER:
ENGINEER:
TECHNICIAN:
TECHNICIAN:

TROTTER and ASSOCIATES, INC.
ENGINEERS AND SURVEYORS
40W201 Wasco Road, Suite D
St. Charles, IL 60175
Ph.: 630-587-0470 • Fax: 630-587-0475

The Reserve at Hudson Crossing - Roadway Improvements
Schedule of Quantities
Oswego, Kendall County, Illinois

Project No.: SH0002
File Name: 06_SCH_2.dgn
Issue Date: 2/21/2019
Scale: N.T.S.
Sheet Number
6

Catch Basin, Type A-1-C, 4' Dia

ALIGNMENT	STRUCTURE ID	STATION	OFFSET	QUANTITY (EACH)
HARRISON STREET	CB-1	7+14.68	29.34' LT	1
ADAMS STREET	CB-25	25+42.20	18.50' LT	1
			TOTAL	2

Catch Basin, Type A-8, 4' Dia

ALIGNMENT	STRUCTURE ID	STATION	OFFSET	QUANTITY (EACH)
ADAMS STREET	CB-21	23+00.00	43.50' RT	1
ADAMS STREET	CB-19	21+78.00	23.5' RT	1
			TOTAL	2

Catch Basin, Type A-10, 4' Dia

ALIGNMENT	STRUCTURE ID	STATION	OFFSET	QUANTITY (EACH)
HARRISON STREET	CB-2	7+17.16	17.60' LT	1
HARRISON STREET	CB-7	13+61.04	13.50' LT	1
JACKSON STREET	CB-13	201+54.19	13.50' RT	1
JACKSON STREET	CB-14	201+58.52	13.50' LT	1
			TOTAL	4

Catch Basin, Type A-11, 4' Dia

ALIGNMENT	STRUCTURE ID	STATION	OFFSET	QUANTITY (EACH)
JACKSON STREET	CB-11	200+43.51	13.50' RT	1
JACKSON STREET	CB-12	200+43.53	13.50' LT	1
ADAMS STREET	CB-17	20+79.64	13.50' RT	1
ADAMS STREET	CB-20	22+34.51	32.00' RT	1
ADAMS STREET	CB-22	23+50.08	37.64' RT	1
ADAMS STREET	CB-23	23+78.02	37.18' RT	1
ADAMS STREET	CB-24	24+41.75	32.00' RT	1
ADAMS STREET	CB-26	25+42.20	32.00' RT	1
ADAMS STREET	CB-27	26+55.15	32.00' RT	1
			TOTAL	9

Catch Basin, Type C-8, 2' Dia

ALIGNMENT	STRUCTURE ID	STATION	OFFSET	QUANTITY (EACH)
HARRISON STREET	CB-3	10+66.23	33.86' RT	1
			TOTAL	1

Catch Basin, Type C-10, 2' Dia

ALIGNMENT	STRUCTURE ID	STATION	OFFSET	QUANTITY (EACH)
HARRISON STREET	CB-8	13+48.58	13.50' LT	1
HARRISON STREET	CB-9	13+88.05	13.50' LT	1
HARRISON STREET	CB-10	14+02.17	13.50' LT	1
ADAMS STREET	CB-18	21+54.50	13.50' RT	1
			TOTAL	4

Catch Basin, Type C-11, 2' Dia

ALIGNMENT	STRUCTURE ID	STATION	OFFSET	QUANTITY (EACH)
HARRISON STREET	CB-4	11+63.19	30.50' LT	1
HARRISON STREET	CB-5	12+11.77	30.50' LT	1
HARRISON STREET	CB-6	13+12.35	30.50' LT	1
HARRISON STREET	CB-15	14+89.90	30.50' LT	1
HARRISON STREET	CB-16	15+74.40	30.50' LT	1
			TOTAL	5

Storm Manhole, Type A-1-C, 4' Dia

ALIGNMENT	STRUCTURE ID	STATION	OFFSET	QUANTITY (EACH)
HARRISON STREET	STMH-1	10+66.07	8.00' LT	1
HARRISON STREET	STMH-2	13+63.93	31.62' LT	1
JACKSON STREET	STMH-3	202+44.38	30.42' RT	1
ADAMS STREET	STMH-4	20+78.38	25.45' LT	1
ADAMS STREET	STMH-5	23+33.62	39.58' RT	1
ADAMS STREET	STMH-6	23+85.13	37.17' RT	1
			TOTAL	6

Precast Concrete Flared End Section, 12"

ALIGNMENT	STRUCTURE ID	STATION	OFFSET	QUANTITY (EACH)
HARRISON STEET	FES-2	16+84.59	28.50' LT	1
			TOTAL	1

Precast Concrete Flared End Section, 18"

ALIGNMENT	STRUCTURE ID	STATION	OFFSET	QUANTITY (EACH)
HARRISON STEET	FES-1	7+09.16	55.46' LT	1
			TOTAL	1

Precast Concrete Flared End Section, 24"

ALIGNMENT	STRUCTURE ID	STATION	OFFSET	QUANTITY (EACH)
ADAMS STREET	FES-3	27+00.69	34.65' RT	1
			TOTAL	1

Storm Sewer, Class A, Type 1, 12"

ALIGNMENT	PIPE ID	STA. TO STA.	QUANTITY (FOOT)
HARRISON STREET	SS-17	14+89.90, 30.50' LT TO 15+74.40 30.50' LT	83
HARRISON STREET	SS-18	15+74.40, 30.50' LT TO 16+84.59, 28.50' LT	107
		TOTAL	190

Storm Sewer, Class A, Type 2, 12"

ALIGNMENT	PIPE ID	STA. TO STA.	QUANTITY (FOOT)
HARRISON STREET	SS-4	10+66.07, 33.86' RT TO 10+66.23, 8.00' LT	38
HARRISON STREET	SS-5	11+63.19, 30.50' LT TO 12+11.77, 30.50 LT	47
HARRISON STREET	SS-6	12+11.77, 30.50' LT TO 13+12.35, 30.50' LT	99
HARRISON STREET	SS-7	13+12.35, 30.50' LT TO 13+63.93, 31.62' LT	49
HARRISON STREET	SS-9	13+48.58, 13.50' LT TO 13+61.04, 13.50' LT	10
HARRISON STREET	SS-10	13+61.04, 13.50' LT TO 13+88.05, 13.50' LT	24
HARRISON STREET	SS-11	13+88.05, 13.50' LT TO 14+02.17, 13.50' LT	12
JACKSON STREET	SS-12	13+61.04, 13.50' LT TO 200+43.51, 13.50' RT	51
JACKSON STREET	SS-13	200+43.53, 13.50' LT TO TRENCH DRAIN	3
JACKSON STREET	SS-14	TRENCH DRAIN TO 200+43.51, 13.50' RT	3
JACKSON STREET	SS-15	200+43.51, 13.50' RT TO 201+54.19, 13.37' RT	107
JACKSON STREET	SS-16	201+54.19, 13.50' RT TO 201+54.19, 13.50' RT	21
JACKSON STREET	SS-20	202+44.38, 30.42' RT TO 203+83.96, 30.42' RT	136
ADAMS STREET	SS-24	21+54.50, 13.50' RT TO 21+54.50, 23.00' RT	7
ADAMS STREET	SS-33	25+42.20, 18.50' LT TO 25+42.20, 34.38' RT	48
		TOTAL	655

Storm Sewer, Class B, Type 2, 12"

ALIGNMENT	PIPE ID	STA. TO STA.	QUANTITY (FOOT)
JACKSON STREET	SS-19	202+44.38, 42.24' RT TO 202+44.38, 30.42' RT	9
ADAMS STREET	SS-21	20+78.38, 35.73' RT TO 20+78.38, 25.35' RT	9
		TOTAL	18

Storm Sewer, Class A, Type 1, 15"

ALIGNMENT	PIPE ID	STA. TO STA.	QUANTITY (FOOT)
HARRISON STREET	SS-3	7+17.16, 17.60' LT TO 7+85.16, 17.60' LT	68
		TOTAL	68

Storm Sewer, Class A, Type 2, 15"

ALIGNMENT	PIPE ID	STA. TO STA.	QUANTITY (FOOT)
HARRISON STREET	SS-8	13+61.04, 13.50' LT TO 13+63.93, 31.62' LT	16
ADAMS STREET	SS-22	20+78.38, 25.45' LT TO 20+79.64, 13.50' RT	33
ADAMS STREET	SS-23	20+79.64, 13.50' RT TO 21+54.50, 23.00' RT	72
		TOTAL	121

Storm Sewer, Class A, Type 2, 18"

ALIGNMENT	PIPE ID	STA. TO STA.	QUANTITY (FOOT)
HARRISON STREET	SS-1	7+09.16, 55.46' LT TO 7+14.68, 29.34' LT	18
HARRISON STREET	SS-2	7+14.68, 29.34' LT TO 7+17.16, 17.60' LT	8
ADAMS STREET	SS-25	21+54.50, 23.00' RT TO 22+34.51, 32.00' RT	76
ADAMS STREET	SS-26	22+34.51, 32.00' RT TO 23+00.00, 43.50' RT	63
ADAMS STREET	SS-27	23+00.00, 43.50' RT TO 23+33.62, 39.58' RT	31
		TOTAL	196

Storm Sewer, Class A, Type 2, 21"

ALIGNMENT	PIPE ID	STA. TO STA.	QUANTITY (FOOT)
ADAMS STREET	SS-28	23+33.62, 39.58' RT TO 23+50.08, 37.64' RT	15
ADAMS STREET	SS-29	23+50.08, 37.64' RT TO 23+78.02, 37.18' RT	23
ADAMS STREET	SS-30	23+78.02, 37.18' RT TO 23+85.13, 37.17' RT	4
ADAMS STREET	SS-31	23+85.13, 37.17' RT TO 24+41.75, 32.00' RT	53
ADAMS STREET	SS-32	24+41.75, 32.00' RT TO 25+42.20, 32.00' RT	96
		TOTAL	191

Storm Sewer, Class A, Type 2, 24"

ALIGNMENT	PIPE ID	STA. TO STA.	QUANTITY (FOOT)
ADAMS STREET	SS-34	25+42.20, 32.00' RT TO 26+55.15, 32.00' RT	109
ADAMS STREET	SS-35	26+55.15, 32.00' RT TO 27+00.69, 34.65' RT	44
		TOTAL	153

Trench Drain - Pavement

ALIGNMENT	STA. TO STA.	QUANTITY (FOOT)
JACKSON STREET	200+43.53	20
	TOTAL	20

Trench Drain - Patio

ALIGNMENT	STA. TO STA.	QUANTITY (FOOT)
HARRISON STREET	10+66.23 TO 11+09.26	42
	TOTAL	42

Inlet Filter

ALIGNMENT	STATION	OFFSET	QUANTITY (EACH)
HARRISON STREET	5+72.16	17.14' LT	1
HARRISON STREET	6+26.50	12.33' RT	1
HARRISON STREET	7+17.16	17.60' LT	1
HARRISON STREET	7+17.76	14.03' RT	1
HARRISON STREET	7+88.66	17.53' LT	1
HARRISON STREET	7+88.70	13.87' RT	1
HARRISON STREET	7+95.79	17.47' LT	1
HARRISON STREET	10+66.23	33.86' RT	1
HARRISON STREET	11+63.19	30.50' LT	1
HARRISON STREET	12+11.77	30.50' LT	1
HARRISON STREET	13+12.35	30.50' LT	1
HARRISON STREET	13+48.58	13.50' LT	1
HARRISON STREET	13+61.04	13.50' LT	1
HARRISON STREET	13+88.05	13.50' LT	1
HARRISON STREET	14+02.17	13.50' LT	1
HARRISON STREET	14+89.90	30.50' LT	1
HARRISON STREET	15+74.40	30.50' LT	1
ADAMS STREET	20+79.64	13.50' RT	1
ADAMS STREET	21+54.50	13.50' RT	1
ADAMS STREET	21+54.50	23.00' RT	1
ADAMS STREET	22+34.51	32.00' RT	1
ADAMS STREET	23+00.00	43.50' RT	1
ADAMS STREET	23+50.08	37.64' RT	1
ADAMS STREET	23+78.02	37.18' RT	1
ADAMS STREET	24+41.75	32.00' RT	1
ADAMS STREET	25+42.20	32.00' RT	1
ADAMS STREET	26+55.15	32.00' RT	1
JACKSON STREET	200+43.51	13.50' RT	1
JACKSON STREET	200+43.53	13.50' LT	1
JACKSON STREET	201+54.19	13.50' RT	1
JACKSON STREET	201+54.19	13.50' LT	1
WASHINGTON STREET	110+28.84	24.13' LT	1
		TOTAL	32

4" Topsoil, Seeding Class 1A and Erosion Control Blanket

ALIGNMENT	STA. TO STA.	QUANTITY (SQ YD)
HARRISON STREET	10+00.00 TO 17+00.00	342
ADAMS STREET	20+00.00 TO 24+50.00	87
ADAMS STREET	24+50.00 TO 27+50.00	504
JACKSON STREET	200+00.00 TO 204+00.00	504
COMPENSATORY STORAGE POND		921
	TOTAL	2,358

4" Topsoil, Seeding Class 4B

LOCATION		QUANTITY (SQ YD)
COMPENSATORY STORAGE POND		1,471
	TOTAL	1,471

Sodding, Salt Tolerant

ALIGNMENT	STA. TO STA.	QUANTITY (SQ YD)
HARRISON STREET	5+00.00 TO 10+00.00	286
HARRISON STREET	10+00.00 TO 17+00.00	849
ADAMS STREET	20+00.00 TO 24+50.00	1,085
ADAMS STREET	24+50.00 TO 27+50.00	594
	TOTAL	2,814

Perimeter Erosion Barrier

ALIGNMENT	STA. TO STA.	QUANTITY (FOOT)
HARRISON STREET	5+00.00 TO 10+00.00	47
HARRISON STREET	10+00.00 TO 17+00.00	638
ADAMS STREET	20+00.00 TO 24+50.00	400
ADAMS STREET	24+50.00 TO 27+50.00	453
JACKSON STREET	200+00.00 TO 204+00.00	249
	TOTAL	1,787

ISSUE	REVISIONS	DATE
5.	ISSUED FOR BIDDING	2/21/19
4.	PER VILLAGE OF OSWEGO, IDOT, FOX METRO	2/15/19
3.	REVISIONS PER VILLAGE OF OSWEGO REVIEW	1/11/19
2.	REVISIONS PER VILLAGE OF OSWEGO REVIEW	12/4/18
1.	REVISIONS PER VILLAGE OF OSWEGO REVIEW	11/21/18

PROJECT STAFF
PROJECT MANAGER:
ENGINEER:
ENGINEER:
ENGINEER:
TECHNICIAN:
TECHNICIAN:

TROTTER and ASSOCIATES, INC.
ENGINEERS AND SURVEYORS
40W201 Wasco Road, Suite D
St. Charles, Il. 60175
Ph.: 630-587-0470 • Fax: 630-587-0475

The Reserve at Hudson Crossing - Roadway Improvements
Schedule of Quantities
Oswego, Kendall County, Illinois

Project No.: SH0002
File Name: 07_SCH_3.dgn
Issue Date: 2/21/2019
Scale: N.T.S.
Sheet Number
7

Sanitary Manhole, Type A-1-C, 4' Dia

ALIGNMENT	STRUCTURE ID	STATION	OFFSET	QUANTITY (EACH)
HARRISON STREET	SNMH-1	5+01.68	20.85' LT	1
HARRISON STREET	SNMH-2	8+45.07	23.66' LT	1
HARRISON STREET	SNMH-3	10+56.02	0.12' LT	1
HARRISON STREET	SNMH-4	12+11.77	0.00' RT	1
HARRISON STREET	SNMH-5	12+11.77	40.18' RT	1
HARRISON STREET	SNMH-6	13+74.60	0.00' RT	1
HARRISON STREET	SNMH-8	14+42.47	40.51' RT	1
JACKSON STREET	SNMH-9	201+68.00	0.00' RT	1
JACKSON STREET	SNMH-10	201+68.00	52.18' LT	1
JACKSON STREET	SNMH-11	201+68.04	37.09' RT	1
JACKSON STREET	SNMH-12	203+50.32	0.00' RT	1
ADAMS STREET	SNMH-13	21+90.00	5.00' RT	1
ADAMS STREET	SNMH-14	26+70.00	5.00' RT	1
			TOTAL	13

Sanitary Manhole, Type C-1-C, 4' Dia

ALIGNMENT	STRUCTURE ID	STATION	OFFSET	QUANTITY (EACH)
HARRISON STREET	SNMH-7	14+42.47	0.00' RT	1
			TOTAL	1

Sanitary Grease Interceptor - 1,500 Gallon

ALIGNMENT	STATION	OFFSET	QUANTITY (EACH)
HARRISON STREET	10+51.47	38.00' RT	1
		TOTAL	1

Sanitary Sewer Service, PVC, 6"

ALIGNMENT	PIPE ID	STA. TO STA.	QUANTITY (FOOT)
HARRISON STREET	SN-4	10+56.02, 0.12' LT TO 10+52.08, 31.53' RT	32
HARRISON STREET	SN-5	10+50.87, 44.48' RT TO 10+72.26, 56.61' RT	25
HARRISON STREET	SERVICE	14+39.47, 34.97' LT TO 14+39.47, 0.00' RT	35
		TOTAL	92

Sanitary Sewer, PVC, 8" (SDR-26)

ALIGNMENT	PIPE ID	STA. TO STA.	QUANTITY (FOOT)
JACKSON STREET	SN-13	201+68.00, 0.00' RT TO 201+68.00, 42.00' RT	42
		TOTAL	42

Sanitary Sewer, PVC, 10" (SDR-26)

ALIGNMENT	PIPE ID	STA. TO STA.	QUANTITY (FOOT)
JACKSON STREET	SN-14	201+68.00, 0.00' RT TO 203+50.32, 0.00' RT	182
ADAMS STREET	SN-15	21+90.00, 5.00' RT TO 23+62.82, 5.00' RT	173
ADAMS STREET	SN-16	23+62.82, 5.00' RT TO 26+70.00, 5.00' RT	307
		TOTAL	662

Sanitary Sewer, PVC, 12" (SDR-26)

ALIGNMENT	PIPE ID	STA. TO STA.	QUANTITY (FOOT)
HARRISON STREET	SN-1	PUMP STATION TO 5+01.68, 20.85' LT	94
HARRISON STREET	SN-2	5+01.68, 20.85' LT TO 8+45.07, 23.66' LT	343
HARRISON STREET	SN-3	8+45.07, 23.66' LT TO 10+56.02, 0.12' LT	212
HARRISON STREET	SN-6	10+56.02, 0.12' LT TO 12+11.77, 0.00' RT	156
HARRISON STREET	SN-7	12+11.77, 0.00' RT TO 12+11.77, 43.00' RT	43
HARRISON STREET	SN-8	12+11.77, 0.00' RT TO 13+74.60, 0.00' RT	163
HARRISON STREET	SN-9	13+74.60, 0.00' RT TO 14+42.27, 0.00' RT	68
HARRISON STREET	SN-10	14+42.27, 0.00' RT TO 14+42.27, 44.50' RT	45
JACKSON STREET	SN-11	200+00.00, 0.00' RT TO 201+68.00, 0.00' RT	168
JACKSON STREET	SN-12	201+68.00, 0.00' RT TO 201+68.00, 56.00' LT	56
		TOTAL	1,348

Jack and Bore Steel Casing, 30"

ALIGNMENT	STA. TO STA.	QUANTITY (FOOT)
HARRISON STREET	9+42.61 TO 10+46.25	105
	TOTAL	105

Steel Casing, 30"

ALIGNMENT	STA. TO STA.	QUANTITY (FOOT)
HARRISON STREET	5+44.24, 10.70' LT TO 5+44.24, 31.70' LT	21
	TOTAL	21

Valve Vault, Type A-1-C, 5' Dia w/ 8" Gate Valve

ALIGNMENT	STRUCTURE ID	STATION	OFFSET	QUANTITY (EACH)
WASHINGTON STREET	VV-10	108+13.00	43.91' LT	1
			TOTAL	1

Valve Vault, Type A-1-C, 5' Dia w/ 10" Gate Valve

ALIGNMENT	STRUCTURE ID	STATION	OFFSET	QUANTITY (EACH)
HARRISON STREET	VV-2	10+38.47	8.16' RT	1
HARRISON STREET	VV-3	13+98.18	10.00' RT	1
JACKSON STREET	VV-4	200+14.98	18.60' LT	1
JACKSON STREET	VV-5	203+45.33	18.60' LT	1
ADAMS STREET	VV-6	23+76.41	5.00' LT	1
ADAMS STREET	VV-7	23+86.41	5.00' LT	1
			TOTAL	6

Valve Vault, Type A-1-C, 5' Dia w/ 12" Gate Valve

ALIGNMENT	STRUCTURE ID	STATION	OFFSET	QUANTITY (EACH)
HARRISON STREET	VV-1	5+44.24	34.20' LT	1
			TOTAL	1

Valve Box w/ 10" Gate Valve

ALIGNMENT	STRUCTURE ID	STATION	OFFSET	QUANTITY (EACH)
HARRISON STREET	VNB-1	11+87.95	41.18' RT	1
JACKSON STREET	VNB-2	201+78.00	54.18' LT	1
			TOTAL	2

Fire Hydrant, Complete Assembly

ALIGNMENT	STRUCTURE ID	STATION	OFFSET	QUANTITY (EACH)
HARRISON STREET	FH-1	10+78.00	19.19' RT	1
HARRISON STREET	FH-2	12+80.00	21.50' RT	1
HARRISON STREET	FH-3	14+32.47	21.91' RT	1
JACKSON STREET	FH-4	203+04.51	14.60' LT	1
ADAMS STREET	FH-5	20+92.00	16.50' LT	1
ADAMS STREET	FH-6	26+52.50	22.21' LT	1
WASHINGTON STREET	FH-7	109+65.49	35.50' LT	1
			TOTAL	7

Ductile Iron Water Main, 8"

ALIGNMENT	STA. TO STA.	QUANTITY (FOOT)
WASHINGTON STREET	108+03.18 TO 111+19.75	320
	TOTAL	320

Ductile Iron Water Main, 10"

ALIGNMENT	STA. TO STA.	QUANTITY (FOOT)
HARRISON STREET	10+33.50 TO 14+32.47	398
HARRISON STREET	11+87.95, 10.00' RT TO 43.00' RT	33
JACKSON STREET	200+09.98 TO 203+95.01	388
JACKSON STREET	201+78.00, 18.60' LT TO 56.50' LT	38
ADAMS STREET	20+43.30 TO 24+50.00	407
ADAMS STREET	24+50.00 TO 26+88.43	256
	TOTAL	1,520

Adjusting Water Main, Special, 12"

ALIGNMENT	STA. TO STA.	QUANTITY (FOOT)
WASHINGTON STREET	5+44.24, 39.20' LT TO 3.20' LT	36
	TOTAL	36

Steel Casing, 20"

ALIGNMENT	STA. TO STA.	QUANTITY (FOOT)
HARRISON STREET	10+46 TO 10+76	30
HARRISON STREET	12+01 TO 12+22	21
HARRISON STREET	13+51 TO 13+86	35
JACKSON STREET	203+72 TO 203+93	21
ADAMS STREET	20+68.56 TO 20+89.56	21
ADAMS STREET	23+21.72 TO 23+42.73	21
ADAMS STREET	25+31.70 TO 25+52.70	21
WASHINGTON STREET	108+20.7 TO 108+46.7	26
	TOTAL	196

Water Service, Special, 1"

ALIGNMENT	STA. TO STA.	QUANTITY (FOOT)
HARRISON STREET	12+72.83, 34.98' LT TO 12+72.83, 10.00' RT	45
HARRISON STREET	14+29.47, 34.98' LT TO 14+29.47, 10.00' RT	45
	TOTAL	90

Connection to Existing Water Main, 6"

ALIGNMENT	STATION	OFFSET	QUANTITY (EACH)
ADAMS STREET	26+88.43	16.11' RT	1
		TOTAL	1

Connection to Existing Water Main, 10"

ALIGNMENT	STATION	OFFSET	QUANTITY (EACH)
HARRISON STREET	10+33.50	7.70' RT	1
JACKSON STREET	203+95.01	10.27' RT	1
		TOTAL	2

Precast Concrete Transformer Pad

ALIGNMENT	STATION	OFFSET	QUANTITY (EACH)
HARRISON STREET	11+20.09	35.50' RT	1
HARRISON STREET	14+19.57	23.49' RT	1
		TOTAL	2

Precast Concrete Switchgear Pad

ALIGNMENT	STATION	OFFSET	QUANTITY (EACH)
ADAMS STREET	23+23.14	21.22' RT	1
		TOTAL	1

Electric Splice Box

ALIGNMENT	STATION	OFFSET	QUANTITY (EACH)
HARRISON STREET	13+49.55	40.44' RT	1
		TOTAL	1

Connection to Utility Pole

ALIGNMENT	STATION	OFFSET	QUANTITY (EACH)
HARRISON STREET	10+67.93	32.49' LT	1
HARRISON STREET	10+68.93	115.76' LT	1
JACKSON STREET	23+46.66	34.75' RT	1
ADAMS STREET	26+40.81	5.00' LT	1
WASHINGTON STREET	111+12.96	30.60' RT	1
		TOTAL	5

Electric Cable in Conduit, 500 CU - 400 Amp Secondary Cable

ALIGNMENT	STA. TO STA.	QUANTITY (FOOT)
HARRISON STREET	14+09.08 TO 14+19.57	85
	TOTAL	85

Underground Conduit, 4" Sch. 40 PVC

ALIGNMENT	STA. TO STA.	QUANTITY (FOOT)
HARRISON STREET	14+09.08 TO 14+19.57	73
	TOTAL	73

Underground Conduit, 6" Sch. 40 PVC

ALIGNMENT	STA. TO STA.	QUANTITY (FOOT)
HARRISON STREET	10+68.93, 115.76' RT TO 11+20.09, 35.50' RT	198
HARRISON STREET	11+20.09, 35.50' RT TO 14+19.57, 23.49' RT	303
HARRISON STREET	10+67.93, 32.49' RT TO 13+49.55, 40.44' RT	346
JACKSON STREET	200+40.47, 25.00' RT TO 203+65.29, 40.32' RT	329
JACKSON STREET	200+40.47, 25.00' RT TO 203+79.55, 17.24' RT	28
ADAMS STREET	111+12.96, 30.60' RT TO 23+23.14, 21.22' RT	397
ADAMS STREET	23+23.14, 21.22' RT TO 26+40.81, 17.49' LT	347
	TOTAL	1,948

ISSUE	REVISIONS	DATE
5.	ISSUED FOR BIDDING	2/21/19
4.	PER VILLAGE OF OSWEGO, IDOT, FOX METRO	2/15/19
3.	REVISIONS PER VILLAGE OF OSWEGO REVIEW	1/11/19
2.	REVISIONS PER VILLAGE OF OSWEGO REVIEW	12/4/18
1.	REVISIONS PER VILLAGE OF OSWEGO REVIEW	11/21/18

PROJECT STAFF
PROJECT MANAGER:
ENGINEER:
ENGINEER:
ENGINEER:
TECHNICIAN:
TECHNICIAN:

TROTTER ASSOCIATES, INC.
ENGINEERS AND SURVEYORS
409/201 Veterans Roadd, Suite D
Bloomingdale, Illinois 60108
Ph. 630-587-0170 • Fax: 630-587-0175

The Reserve at Hudson Crossing - Roadway Improvements

Schedule of Quantities

Oswego, Kendall County, Illinois

Project No.: SH0002
File Name: 08_SCH_4.dgn
Issue Date: 2/21/2019
Scale: N.T.S.
Sheet Number
8

Earthwork - Harrison Street

STATION	REMOVAL AND DISPOSAL OF UNSUITABLE MATERIAL (SF)	(CY)	POROUS GRANULAR EMBANKMENT (SF)	(CY)	EXCAVATION (SF)	(CY)	EMBANKMENT (SF)	(CY)
10+25.00	66.8		19.9		0.0		1.6	
		45.4		13.9		0.2		98.2
10+50.00	31.3		10.1		0.5		210.5	
		33.9		22.6		0.7		148.0
10+75.00	41.8		38.6		1.0		109.2	
		38.8		36.8		0.9		69.2
11+00.00	42.1		40.8		1.0		40.3	
		38.3		28.1		1.0		36.3
11+25.00	40.7		19.8		1.3		38.2	
		21.7		12.0		0.6		17.8
11+39.67	39.3		24.4		1.0		27.2	
		14.1		8.2		0.3		11.6
11+50.00	34.6		18.5		0.8		33.2	
		4.2		2.3		0.1		3.9
11+53.41	32.7		18.5		0.6		29.2	
		24.3		13.8		0.4		10.6
11+66.90	64.6		36.9		0.8		13.3	
		19.4		10.8		0.3		4.1
11+75.00	64.7		35.0		1.2		13.8	
		60.0		35.1		3.7		12.8
12+00.00	64.8		40.9		6.8		13.9	
		6.5		4.2		0.7		1.4
12+02.71	64.8		42.4		6.4		14.3	
		53.8		41.8		3.4		14.1
12+25.00	65.6		58.9		1.8		19.8	
		62.1		64.8		1.4		19.8
12+50.00	68.4		81.2		1.2		23.0	
		56.6		73.4		0.8		37.7
12+75.00	53.8		77.5		0.5		58.4	
		28.5		43.1		0.7		31.1
12+89.71	50.7		80.7		2.2		55.8	
		19.4		31.2		0.5		18.7
13+00.00	50.9		83.2		0.4		42.2	
		40.1		65.4		6.7		59.4
13+25.00	35.7		58.0		14.0		86.1	
		36.0		60.0		8.6		66.8
13+50.00	42.1		71.6		4.6		58.2	
		39.6		69.9		4.9		57.1
13+75.00	43.4		79.5		6.1		65.1	
		39.2		69.0		7.7		53.3
14+00.00	41.4		69.6		10.6		49.9	
		36.1		66.5		4.9		52.9
14+25.00	36.6		74.1		0.0		64.4	
		21.2		43.1		0.6		25.1
14+37.74	53.1		108.6		2.5		41.8	
		24.0		47.5		4.3		17.2
14+50.00	52.7		100.4		16.6		33.9	
		24.2		44.6		6.0		15.6
14+62.44	52.3		93.3		9.4		34.0	
		24.3		42.1		2.2		16.3
14+75.00	52.0		87.7		0.0		36.2	
		55.2		83.9		0.3		32.5
15+00.00	67.3		93.5		0.6		33.9	
		61.7		73.7		0.6		28.9
15+25.00	65.9		65.7		0.7		28.4	
		60.2		46.7		2.1		23.6
15+50.00	64.0		35.2		4.0		22.7	
		59.4		20.9		4.2		15.2
15+75.00	64.2		9.8		5.2		10.1	
TOTAL		1,048.1		1,175.5		69.0		999.1

Earthwork - Adams Street

STATION	REMOVAL AND DISPOSAL OF UNSUITABLE MATERIAL (SF)	(CY)	POROUS GRANULAR EMBANKMENT (SF)	(CY)	EXCAVATION (SF)	(CY)	EMBANKMENT (SF)	(CY)
20+25.00	51.7		0.0		0.0		0.0	
		39.4		8.0		0.3		47.8
20+50.00	33.3		17.4		0.7		103.3	
		31.2		24.8		0.7		100.3
20+75.00	34.2		36.1		0.9		113.3	
		31.8		39.9		0.9		84.2
21+00.00	34.6		50.2		1.0		68.6	
		5.6		8.3		0.2		14.6
21+04.40	34.4		52.0		1.1		110.6	
		24.1		40.4		1.5		64.3
21+22.50	37.5		68.7		3.4		81.3	
		3.5		6.4		0.3		7.5
21+25.00	37.7		69.9		3.9		81.5	
		35.1		66.2		5.9		79.7
21+50.00	38.2		73.2		8.9		90.6	
		34.8		68.6		5.5		82.7
21+75.00	36.9		75.0		3.0		88.1	
		34.1		70.1		2.0		84.4
22+00.00	36.7		76.5		1.4		94.3	
		37.9		79.6		0.9		84.3
22+25.00	45.3		95.5		0.5		87.8	
		17.6		35.8		0.2		29.3
22+34.49	54.6		108.4		0.4		79.0	
		32.4		71.3		0.2		49.0
22+50.00	58.1		139.9		0.4		91.6	
		54.5		137.5		0.3		89.3
22+75.00	59.6		157.2		0.3		101.4	
		28.5		77.0		0.5		44.4
22+87.85	60.1		166.5		1.6		85.2	
		27.2		76.6		0.7		49.6
23+00.00	60.6		174.0		1.6		135.1	
		13.9		41.1		0.5		43.6
23+07.29	42.4		130.6		1.9		187.6	
		28.2		87.1		0.9		116.5
23+25.00	43.5		135.2		0.8		167.6	
		83.0		228.7		0.5		117.4
23+62.82	75.0		191.4		0.0		0.0	
		83.8		257.9		0.0		125.0
24+00.00	46.7		183.1		0.0		181.5	
		44.9		178.8		0.0		189.3
24+25.00	50.3		203.1		0.0		227.4	
		18.3		73.8		0.0		71.5
24+34.09	58.2		235.3		0.0		197.6	
		36.7		143.6		0.0		116.3
24+50.00	66.4		252.2		0.0		197.3	
		2.4		9.2		0.0		7.2
24+50.99	62.5		250.2		0.0		195.3	
		55.4		219.8		0.0		188.7
24+75.00	62.1		244.2		0.0		229.1	
		53.3		205.7		0.0		200.6
24+98.37	61.0		231.1		0.0		234.5	
		3.7		13.9		0.0		14.2
25+00.00	60.9		230.2		0.0		235.3	
		57.0		202.1		0.0		203.2
25+25.00	62.2		206.5		0.0		203.6	
		56.7		176.5		0.0		177.3
25+50.00	60.3		174.4		0.0		179.4	
		54.4		146.3		0.0		155.6
25+75.00	57.2		141.3		0.0		156.7	
		51.8		117.0		0.0		131.4
26+00.00	54.6		111.4		0.0		127.2	
		49.1		81.7		0.0		94.8
26+25.00	51.5		65.1		0.0		77.6	
		48.4		46.1		1.5		46.4
26+50.00	53.2		34.4		3.2		22.6	
		24.8		16.2		5.6		9.7
26+66.01	30.6		20.2		15.8		10.2	
		10.1		5.7		3.1		2.8
26+75.00	30.1		14.3		2.8		6.8	
TOTAL		1,213.5		3,062.3		32.3		2,923.1

Earthwork - Jackson Street

STATION	REMOVAL AND DISPOSAL OF UNSUITABLE MATERIAL (SF)	(CY)	POROUS GRANULAR EMBANKMENT (SF)	(CY)	EXCAVATION (SF)	(CY)	EMBANKMENT (SF)	(CY)
200+25.00	46.6		75.4		0.0		22.5	
		38.1		62.4		0.0		77.4
200+50.00	35.7		59.4		0.0		144.7	
		51.4		99.8		0.0		98.0
200+75.00	75.4		156.1		0.0		66.9	
		70.3		156.6		0.0		64.9
201+00.00	76.5		182.0		0.0		73.4	
		70.8		184.9		0.0		68.3
201+25.00	76.5		217.4		0.0		74.1	
		71.4		221.1		0.0		73.2
201+50.00	77.7		260.2		0.0		84.0	
		72.3		256.4		0.0		82.2
201+75.00	78.4		293.6		0.0		93.6	
		72.9		284.1		0.0		88.4
202+00.00	79.0		320.1		0.0		97.5	
		66.8		286.1		0.0		122.5
202+25.00	65.3		297.9		0.0		167.2	
		57.4		272.6		0.0		169.4
202+48.45	66.9		329.8		0.0		223.0	
		3.8		19.0		0.0		12.8
202+50.00	67.1		332.4		0.0		223.4	
		62.6		311.7		0.0		187.6
202+75.00	68.2		341.0		0.0		181.9	
		54.6		263.4		0.0		214.6
203+00.00	49.8		227.9		0.0		281.7	
		57.2		244.3		0.0		187.6
203+25.00	73.8		299.8		0.0		123.6	
TOTAL		749.8		2,662.4		0.0		1,447.1

Earthwork - Washington Street

STATION	EXCAVATION (SF)	(CY)	EMBANKMENT (SF)	(CY)
108+25.00	8.6		20.5	
		7.6		104.8
108+50.00	8.0		205.9	
		7.4		170.8
108+71.57	10.7		221.7	
		1.4		22.3
108+75.00	10.7		130.0	
		9.3		118.9
109+00.00	9.5		126.8	
		8.7		108.1
109+25.00	9.4		106.7	
		8.7		90.4
109+50.00	9.5		88.6	
		8.6		73.8
109+75.00	9.1		70.8	
		8.6		75.6
110+00.00	9.4		92.6	
		8.6		80.4
110+25.00	9.2		81.2	
		8.3		69.3
110+50.00	8.7		68.5	
		7.3		57.1
110+75.00	7.0		54.8	
		2.3		15.5
110+83.04	8.7		49.7	
		7.0		22.0
111+00.00	13.8		20.3	
TOTAL		94.0		1,009.0

Earthwork Summary

STATION	REMOVAL AND DISPOSAL OF UNSUITABLE MATERIAL (CY)	POROUS GRANULAR EMBANKMENT (CY)	EXCAVATION (CY)	EMBANKMENT (CY)
HARRISON STREET	1,048	1,176	69	999
ADAMS STREET	1,214	3,062	32	2,923
JACKSON STREET	750	2,662	0	1,447
WASHINGTON STREET	0	0	94	1,009
COMPENSATORY STORAGE	0	0	1,847	0
TOTAL	3,012	6,900	2,042	6,378

NOTE:

AN ESTIMATED 7,800 CY OF MATERIAL TO BE EXCAVATED AS PART OF PROPOSED BUILDING CONSTRUCTION (BY OTHERS). MATERIAL FROM THE PROPOSED BUILDING MUST BE USED AS EMBANKMENT IF SECTION 204 REQUIREMENTS ARE MET AND MATERIAL IS DETERMINED ACCEPTABLE BY THE VILLAGE ENGINEER/GEOTECHNICAL CONSULTANT.

DATE	REVISIONS	ISSUE
2/21/19	ISSUED FOR BIDDING	5.
2/15/19	PER VILLAGE OF OSWEGO, IDOT, FOX METRO	4.
1/11/19	REVISIONS PER VILLAGE OF OSWEGO REVIEW	3.
12/4/18	REVISIONS PER VILLAGE OF OSWEGO REVIEW	2.
11/21/18	REVISIONS PER VILLAGE OF OSWEGO REVIEW	1.

PROJECT STAFF
PROJECT MANAGER:
ENGINEER:
ENGINEER:
ENGINEER:
TECHNICIAN:
TECHNICIAN:

TROTTER and ASSOCIATES, INC.
ENGINEERS AND SURVEYORS
40W201 Wasco Road, Suite D
St. Charles, IL 60175
Ph.: 630-587-0470 • Fax: 630-587-0475

The Reserve at Hudson Crossing - Roadway Improvements

Schedule of Quantities

Oswego, Kendall County, Illinois

Project No.: SH0002
File Name: 09_SCH_5.dgn
Issue Date: 2/21/2019
Scale: N.T.S.
Sheet Number

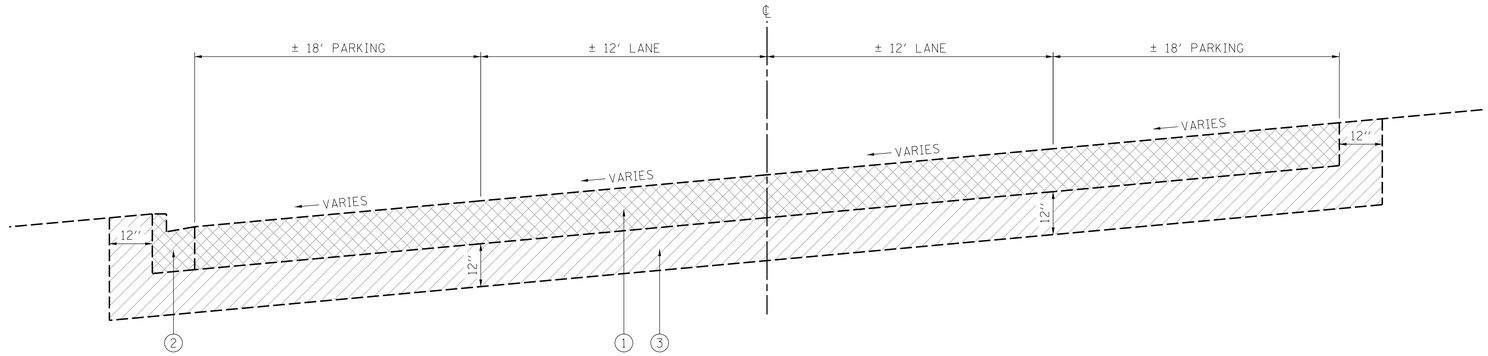

Existing Typical Section
Harrison Street

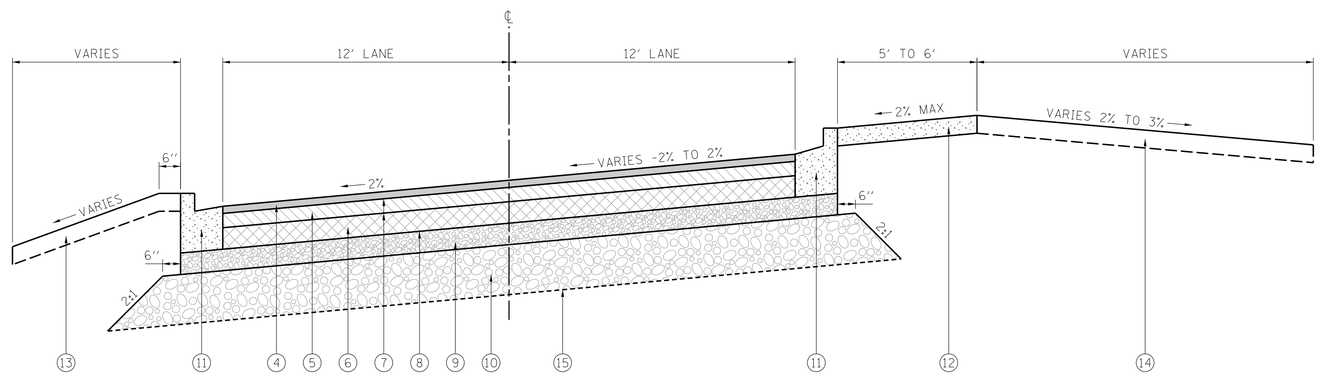

Proposed Typical Section
Harrison Street without Parking

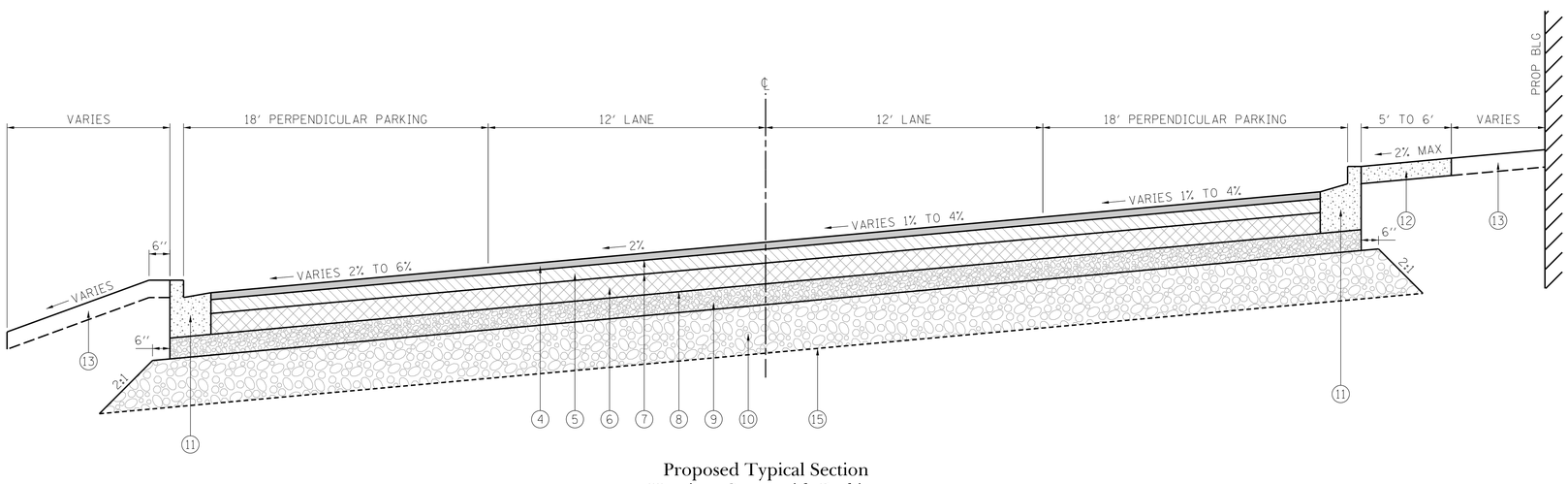

Proposed Typical Section
Harrison Street with Parking

1. PAVEMENT REMOVAL, FULL DEPTH
2. COMBINATION CONCRETE CURB AND GUTTER REMOVAL
3. REMOVAL AND DISPOSAL OF UNSUITABLE MATERIAL
4. PROPOSED HOT-MIX ASPHALT SURFACE COURSE MIX "D", N50 (IL-9.5mm), 2-1/2"
5. PROPOSED HOT-MIX ASPHALT BINDER COURSE IL 19-.0, N50, 4"
6. PROPOSED HOT-MIX ASPHALT BASE COURSE, 6"
7. PROPOSED BITUMINOUS MATERIALS (TACK COAT) 0.025 LBS / SF FOR HMA LIFTS
8. PROPOSED BITUMINOUS MATERIALS (PRIME COAT) 0.25 LBS / SF FOR AGGREGATE BASE
9. PROPOSED AGGREGATE BASE COURSE, TYPE B, 6"
10. POROUS GRANULAR EMBANKMENT
11. PROPOSED COMBINATION CONCRETE CURB AND GUTTER, B-6.12
12. PROPOSED PORTLAND CEMENT CONCRETE SIDEWALK, 5"
13. PROPOSED SODDING, SALT TOLERANT
14. PROPOSED TOPSOIL, FURNISH & PLACE, 4" SEEDING (CL 1) AND EROSION CONTROL BLANKET
15. NON-WOVEN GEOTEXTILE FABRIC

Hot- Mix Asphalt Mixture Requirements

ITEM	AIR VOIDS
HOT-MIX ASPHALT SURFACE COURSE MIX "D", N50 (IL-9.5 mm), 2-1/2"	4% @ 50 GYR
HOT-MIX ASPHALT BINDER COURSE IL-19, N50, 4"	4% @ 50 GYR
HOT-MIX ASPHALT BASE COURSE (HMA BINDER, IL-19 mm, N50), 6"	4% @ 50 GYR
CLASS D PATCHES (HMA BINDER IL-19 mm)	4% @ 70 GYR
HOT-MIX ASPHALT DRIVEWAY (HMA SURFACE COURSE MIX "D", N50, IL-9.5 mm), 3"	4% @ 50 GYR
HOT-MIX ASPHALT BIKE PATH (HMA SURFACE COURSE MIX "D", N50, IL-9.5 mm), 3"	4% @ 50 GYR

THE UNIT WEIGHT USED TO CALCULATE ALL HMA SURFACE QUANTITIES IS 112 LBS/SQ YD/IN

THE "AC TYPE" FOR POLYMERIZED HMA MIXES SHALL BE "SBS/SBR PG 76-22" AND FOR NON-POLYMERIZED

HMA THE "AC TYPE" SHALL BE "PG 64-22" UNLESS MODIFIED BY DISTRICT THREE SPECIAL PROVISIONS

FOR HMA FULL DEPTH "AC TYPE" SEE SPECIAL PROVISIONS

FOR USE OF RECYCLED MATERIALS SEE SPECIAL PROVISIONS

ISSUE	REVISIONS	DATE
5.	ISSUED FOR BIDDING	2/21/19
4.	PER VILLAGE OF OSWEGO, IDOT, FOX METRO	2/15/19
3.	REVISIONS PER VILLAGE OF OSWEGO REVIEW	1/11/19
2.	REVISIONS PER VILLAGE OF OSWEGO REVIEW	12/4/18
1.	REVISIONS PER VILLAGE OF OSWEGO REVIEW	11/21/18

PROJECT STAFF
PROJECT MANAGER:
ENGINEER:
ENGINEER:
ENGINEER:
TECHNICIAN:
TECHNICIAN:

TROTTER ASSOCIATES, INC.
ENGINEERS AND SURVEYORS
400 W. Veterans Roadd, Suite D
Bolingbrook, Illinois 60440
Ph.: 630-587-0170 • Fax: 630-587-0175

The Reserve at Hudson Crossing - Roadway Improvements

Typical Sections - Harrison Street

Oswego, Kendall County, Illinois

Project No.: SH0002
File Name: 10_TYP_1.dgn
Issue Date: 2/21/2019
Scale: N.T.S.
Sheet Number
10

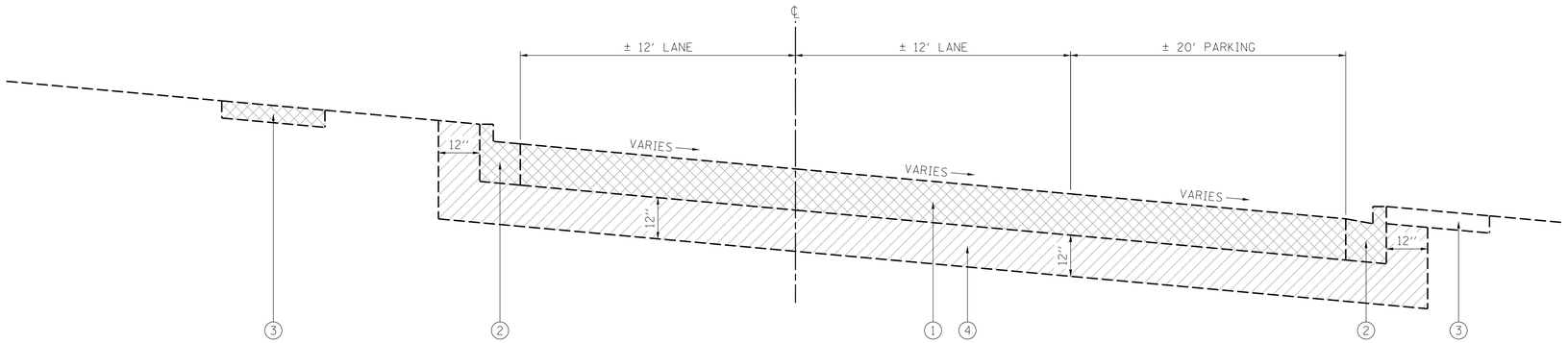

Existing Typical Section
Adams Street

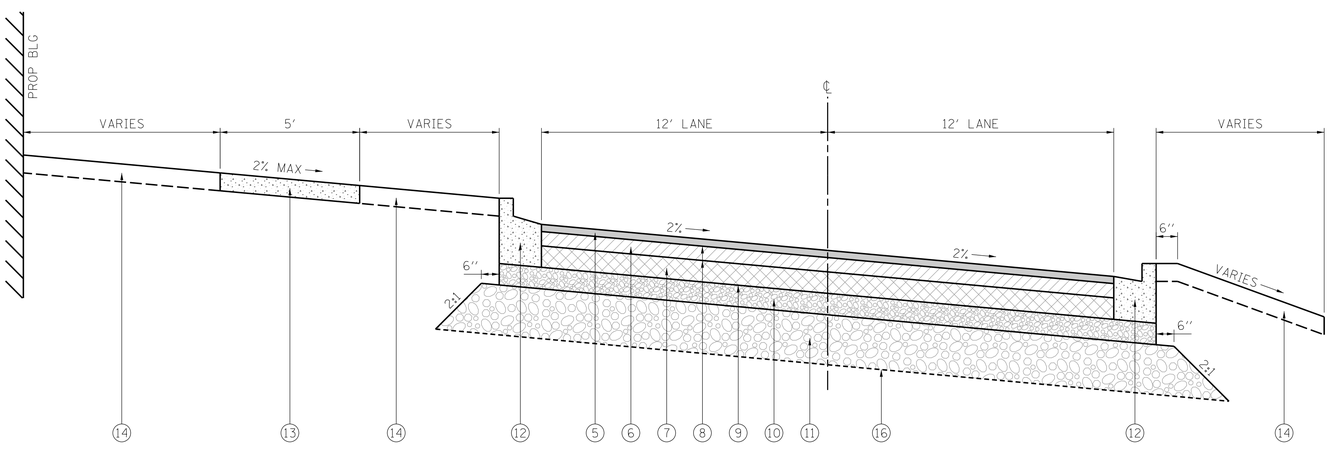

Proposed Typical Section
Adams Street without Parking

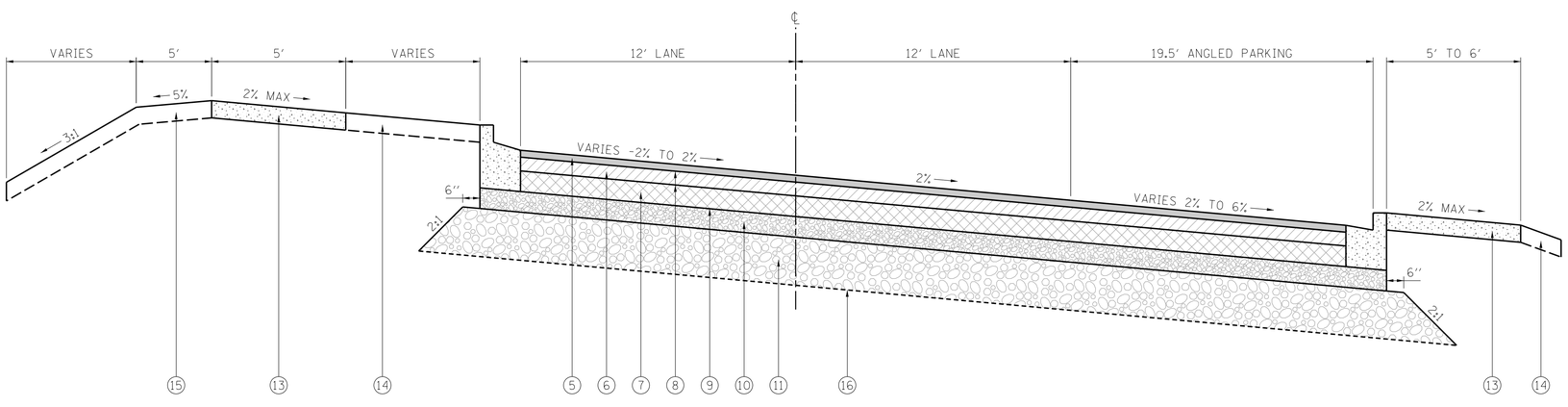

Proposed Typical Section
Adams Street with Parking

① PAVEMENT REMOVAL, FULL DEPTH

② COMBINATION CONCRETE CURB AND GUTTER REMOVAL

③ SIDEWALK REMOVAL

④ REMOVAL AND DISPOSAL OF UNSUITABLE MATERIAL

⑤ PROPOSED HOT-MIX ASPHALT SURFACE COURSE MIX "D", N50 (IL-9.5mm), 2-1/2"

⑥ PROPOSED HOT-MIX ASPHALT BINDER COURSE IL 19-.0, N50, 4"

⑦ PROPOSED HOT-MIX ASPHALT BASE COURSE, 6"

⑧ PROPOSED BITUMINOUS MATERIALS (TACK COAT) 0.025 LBS / SF FOR HMA LIFTS

⑨ PROPOSED BITUMINOUS MATERIALS (PRIME COAT) 0.25 LBS / SF FOR AGGREGATE BASE

⑩ PROPOSED AGGREGATE BASE COURSE, TYPE B, 6"

⑪ POROUS GRANULAR EMBANKMENT

⑫ PROPOSED COMBINATION CONCRETE CURB AND GUTTER, B-6.12

⑬ PROPOSED PORTLAND CEMENT CONCRETE SIDEWALK, 5"

⑭ PROPOSED SODDING, SALT TOLERANT

⑮ PROPOSED TOPSOIL, FURNISH & PLACE, 4" SEEDING (CL 1) AND EROSION CONTROL BLANKET

⑯ NON-WOVEN GEOTEXTILE FABRIC

Hot- Mix Asphalt Mixture Requirements

ITEM	AIR VOIDS
HOT-MIX ASPHALT SURFACE COURSE MIX "D", N50 (IL-9.5 mm), 2-1/2"	4% @ 50 GYR
HOT-MIX ASPHALT BINDER COURSE IL-19, N50, 4"	4% @ 50 GYR
HOT-MIX ASPHALT BASE COURSE (HMA BINDER, IL-19 mm, N50), 6"	4% @ 50 GYR
CLASS D PATCHES (HMA BINDER IL-19 mm)	4% @ 70 GYR
HOT-MIX ASPHALT DRIVEWAY (HMA SURFACE COURSE MIX "D", N50, IL-9.5 mm), 3"	4% @ 50 GYR
HOT-MIX ASPHALT BIKE PATH (HMA SURFACE COURSE MIX "D", N50, IL-9.5 mm), 3"	4% @ 50 GYR

THE UNIT WEIGHT USED TO CALCULATE ALL HMA SURFACE QUANTITIES IS 112 LBS/SQ YD/IN

THE "AC TYPE" FOR POLYMERIZED HMA MIXES SHALL BE "SBS/SBR PG 76-22" AND FOR NON-POLYMERIZED

HMA THE "AC TYPE" SHALL BE "PG 64-22" UNLESS MODIFIED BY DISTRICT THREE SPECIAL PROVISIONS

FOR HMA FULL DEPTH "AC TYPE" SEE SPECIAL PROVISIONS

FOR USE OF RECYCLED MATERIALS SEE SPECIAL PROVISIONS

ISSUE	REVISIONS	DATE
5.	ISSUED FOR BIDDING	2/21/19
4.	PER VILLAGE OF OSWEGO, IDOT, FOX METRO	2/15/19
3.	REVISIONS PER VILLAGE OF OSWEGO REVIEW	1/11/19
2.	REVISIONS PER VILLAGE OF OSWEGO REVIEW	12/4/18
1.	REVISIONS PER VILLAGE OF OSWEGO REVIEW	11/21/18

PROJECT STAFF
PROJECT MANAGER:
ENGINEER:
ENGINEER:
ENGINEER:
TECHNICIAN:
TECHNICIAN:

TROTTER ASSOCIATES, INC.
ENGINEERS AND SURVEYORS
4109 W. Main St., Suite D
Oswego, Illinois 60543
Ph. 630-587-0170 • Fax 630-587-0175

The Reserve at Hudson Crossing - Roadway Improvements

Typical Sections - Adams Street

Oswego, Kendall County, Illinois

Project No.: SH0002
File Name: 11_TYP_2.dgn
Issue Date: 2/21/2019
Scale: N.T.S.
Sheet Number
11

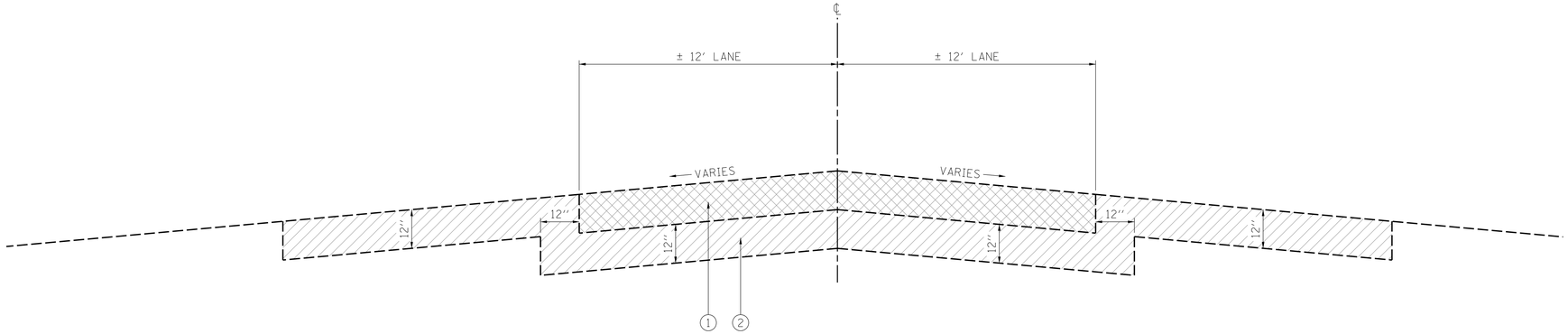

Existing Typical Section
Jackson Street

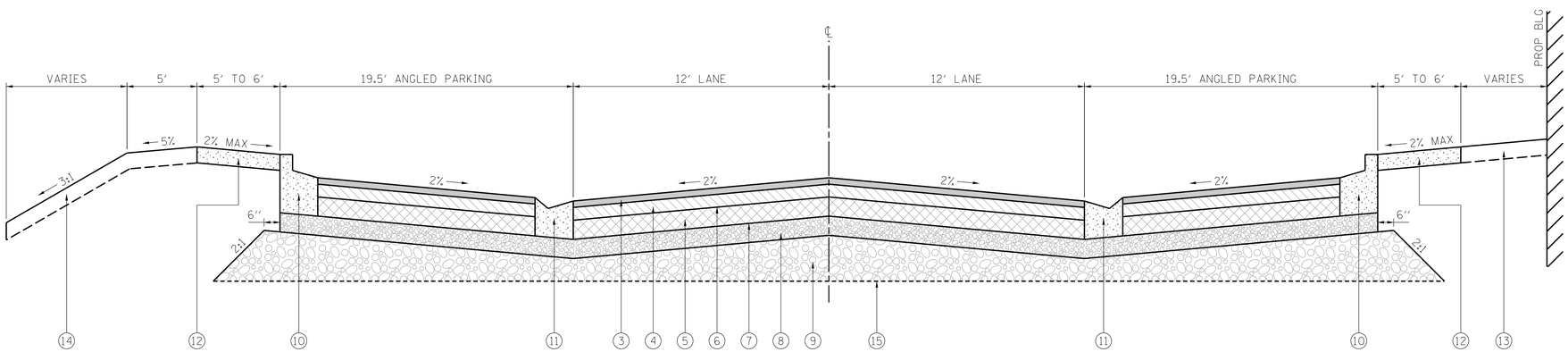

Proposed Typical Section
Jackson Street with Parking

1. PAVEMENT REMOVAL, FULL DEPTH
2. REMOVAL AND DISPOSAL OF UNSUITABLE MATERIAL
3. PROPOSED HOT-MIX ASPHALT SURFACE COURSE MIX "D", N50 (IL-9.5mm), 2-1/2"
4. PROPOSED HOT-MIX ASPHALT BINDER COURSE IL 19-.0, N50, 4"
5. PROPOSED HOT-MIX ASPHALT BASE COURSE, 6"
6. PROPOSED BITUMINOUS MATERIALS (TACK COAT) 0.025 LBS / SF FOR HMA LIFTS
7. PROPOSED BITUMINOUS MATERIALS (PRIME COAT) 0.25 LBS / SF FOR AGGREGATE BASE
8. PROPOSED AGGREGATE BASE COURSE, TYPE B, 6"
9. POROUS GRANULAR EMBANKMENT
10. PROPOSED COMBINATION CONCRETE CURB AND GUTTER, B-6.12
11. PROPOSED COMBINATION CONCRETE CURB AND GUTTER, B-6.12 (DEPRESSED)
12. PROPOSED PORTLAND CEMENT CONCRETE SIDEWALK, 5"
13. PROPOSED SODDING, SALT TOLERANT
14. PROPOSED TOPSOIL, FURNISH & PLACE, 4" SEEDING (CL 1) AND EROSION CONTROL BLANKET
15. NON-WOVEN GEOTEXTILE FABRIC

Hot- Mix Asphalt Mixture Requirements

ITEM	AIR VOIDS
HOT-MIX ASPHALT SURFACE COURSE MIX "D", N50 (IL-9.5 mm), 2-1/2"	4% @ 50 GYR
HOT-MIX ASPHALT BINDER COURSE IL-19, N50, 4"	4% @ 50 GYR
HOT-MIX ASPHALT BASE COURSE (HMA BINDER, IL-19 mm, N50), 6"	4% @ 50 GYR
CLASS D PATCHES (HMA BINDER IL-19 mm)	4% @ 70 GYR
HOT-MIX ASPHALT DRIVEWAY (HMA SURFACE COURSE MIX "D", N50, IL-9.5 mm), 3"	4% @ 50 GYR
HOT-MIX ASPHALT BIKE PATH (HMA SURFACE COURSE MIX "D", N50, IL-9.5 mm), 3"	4% @ 50 GYR

THE UNIT WEIGHT USED TO CALCULATE ALL HMA SURFACE QUANTITIES IS 112 LBS/SQ YD/IN

THE "AC TYPE" FOR POLYMERIZED HMA MIXES SHALL BE "SBS/SBR PG 76-22" AND FOR NON-POLYMERIZED

HMA THE "AC TYPE" SHALL BE "PG 64-22" UNLESS MODIFIED BY DISTRICT THREE SPECIAL PROVISIONS

FOR HMA FULL DEPTH "AC TYPE" SEE SPECIAL PROVISIONS

FOR USE OF RECYCLED MATERIALS SEE SPECIAL PROVISIONS

ISSUE	REVISIONS	DATE
5.	ISSUED FOR BIDDING	2/21/19
4.	PER VILLAGE OF OSWEGO, IDOT, FOX METRO	2/15/19
3.	REVISIONS PER VILLAGE OF OSWEGO REVIEW	1/1/19
2.	REVISIONS PER VILLAGE OF OSWEGO REVIEW	12/4/18
1.	REVISIONS PER VILLAGE OF OSWEGO REVIEW	11/21/18

PROJECT STAFF
PROJECT MANAGER:
ENGINEER:
ENGINEER:
ENGINEER:
TECHNICIAN:
TECHNICIAN:

TROTTER ASSOCIATES, INC.
ENGINEERS AND SURVEYORS
409/201 Venus Boulevard, Suite D
Yorkville, Illinois 60560
Ph. (630)-587-0170 • Fax (630)-587-0175

The Reserve at Hudson Crossing - Roadway Improvements

Typical Sections - Jackson Street

Oswego, Kendall County, Illinois

Project No.: SH0002
File Name: 12_TYP_3.dgn
Issue Date: 2/21/2019
Scale: N.T.S.
Sheet Number
12

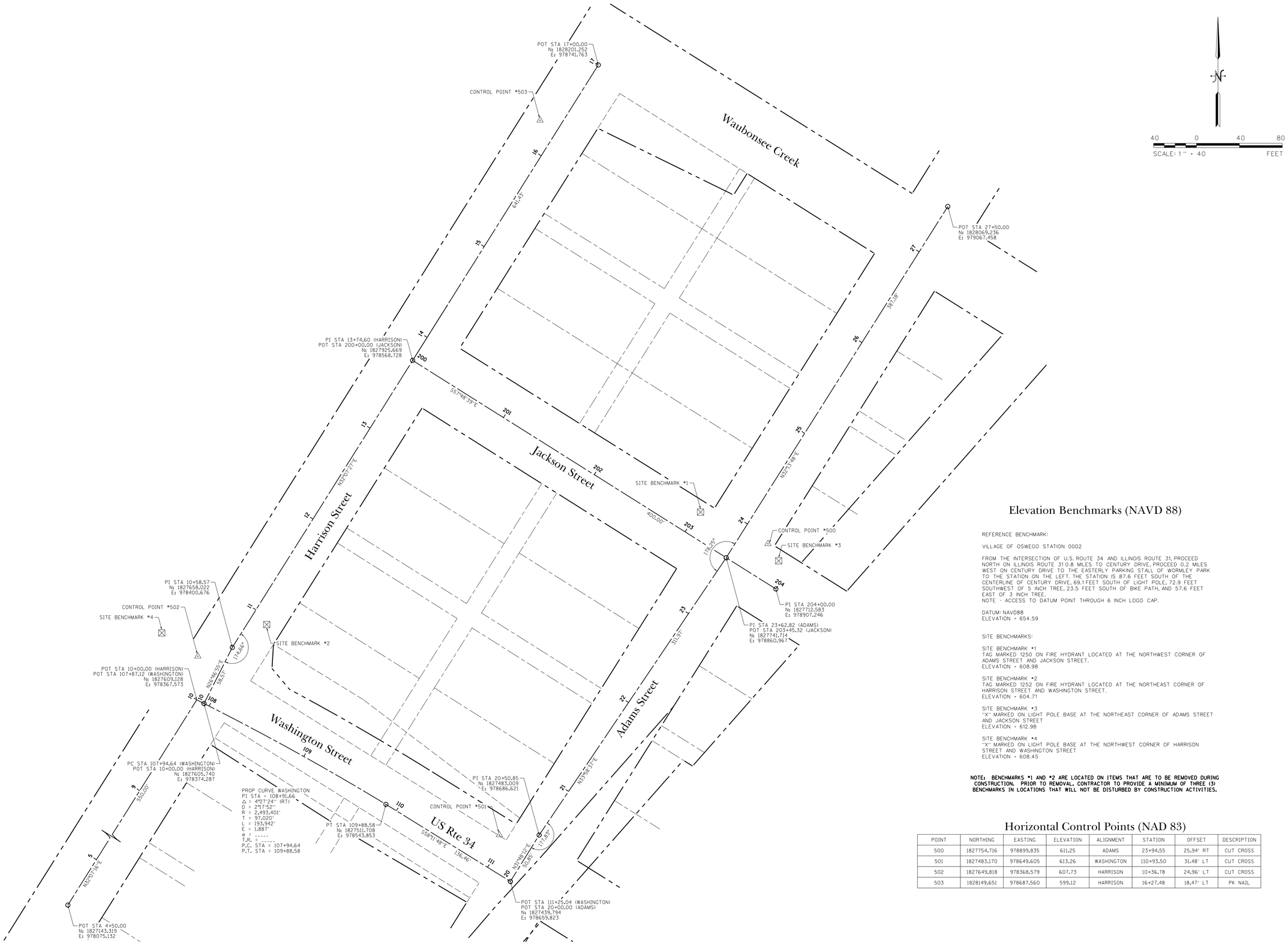

Elevation Benchmarks (NAVD 88)

REFERENCE BENCHMARK:

VILLAGE OF OSWEGO STATION 0002

FROM THE INTERSECTION OF U.S. ROUTE 34 AND ILLINOIS ROUTE 31, PROCEED NORTH ON ILLINOIS ROUTE 31 0.8 MILES TO CENTURY DRIVE, PROCEED 0.2 MILES WEST ON CENTURY DRIVE TO THE EASTERLY PARKING STALL OF WORMLEY PARK TO THE STATION ON THE LEFT. THE STATION IS 87.6 FEET SOUTH OF THE CENTERLINE OF CENTURY DRIVE, 69.1 FEET SOUTH OF LIGHT POLE, 72.9 FEET SOUTHWEST OF 5 INCH TREE, 23.5 FEET SOUTH OF BIKE PATH, AND 57.6 FEET EAST OF 3 INCH TREE.
NOTE - ACCESS TO DATUM POINT THROUGH 6 INCH LOGO CAP.

DATUM: NAVD88
ELEVATION = 654.59

SITE BENCHMARKS:

SITE BENCHMARK #1
TAG MARKED 1250 ON FIRE HYDRANT LOCATED AT THE NORTHWEST CORNER OF ADAMS STREET AND JACKSON STREET.
ELEVATION = 608.98

SITE BENCHMARK #2
TAG MARKED 1252 ON FIRE HYDRANT LOCATED AT THE NORTHEAST CORNER OF HARRISON STREET AND WASHINGTON STREET.
ELEVATION = 604.71

SITE BENCHMARK #3
"X" MARKED ON LIGHT POLE BASE AT THE NORTHEAST CORNER OF ADAMS STREET AND JACKSON STREET
ELEVATION = 612.98

SITE BENCHMARK #4
"X" MARKED ON LIGHT POLE BASE AT THE NORTHWEST CORNER OF HARRISON STREET AND WASHINGTON STREET
ELEVATION = 608.45

NOTE: BENCHMARKS #1 AND #2 ARE LOCATED ON ITEMS THAT ARE TO BE REMOVED DURING CONSTRUCTION. PRIOR TO REMOVAL, CONTRACTOR TO PROVIDE A MINIMUM OF THREE (3) BENCHMARKS IN LOCATIONS THAT WILL NOT BE DISTURBED BY CONSTRUCTION ACTIVITIES.

Horizontal Control Points (NAD 83)

POINT	NORTHING	EASTING	ELEVATION	ALIGNMENT	STATION	OFFSET	DESCRIPTION
500	1827754.716	978899.835	611.25	ADAMS	23+94.55	25.94' RT	CUT CROSS
501	1827483.170	978649.605	613.26	WASHINGTON	110+93.50	31.48' LT	CUT CROSS
502	1827649.818	978368.579	607.73	HARRISON	10+36.78	24.96' LT	CUT CROSS
503	1828149.651	978687.560	599.12	HARRISON	16+27.48	18.47' LT	PK NAIL

ISSUE	REVISIONS	DATE
5.	ISSUED FOR BIDDING	2/21/19
4.	PER VILLAGE OF OSWEGO, IDOT, FOX METRO	2/15/19
3.	REVISIONS PER VILLAGE OF OSWEGO REVIEW	1/11/19
2.	REVISIONS PER VILLAGE OF OSWEGO REVIEW	12/4/18
1.	REVISIONS PER VILLAGE OF OSWEGO REVIEW	11/21/18

PROJECT STAFF
PROJECT MANAGER:
ENGINEER:
ENGINEER:
ENGINEER:
TECHNICIAN:
TECHNICIAN:

TROTTER ASSOCIATES, INC.
ENGINEERS AND SURVEYORS
400 W. Velasco Roadt, Suite D
Oswego, Illinois 60543
Ph. 630-587-0170 • Fax 630-587-0175

The Reserve at Hudson Crossing - Roadway Improvements

Alignments, Ties and Benchmarks

Oswego, Kendall County, Illinois

Project No.: SH0002
File Name: 13_ALIGN.dgn
Issue Date: 2/21/2019
Scale: 1" = 40'
Sheet Number
13

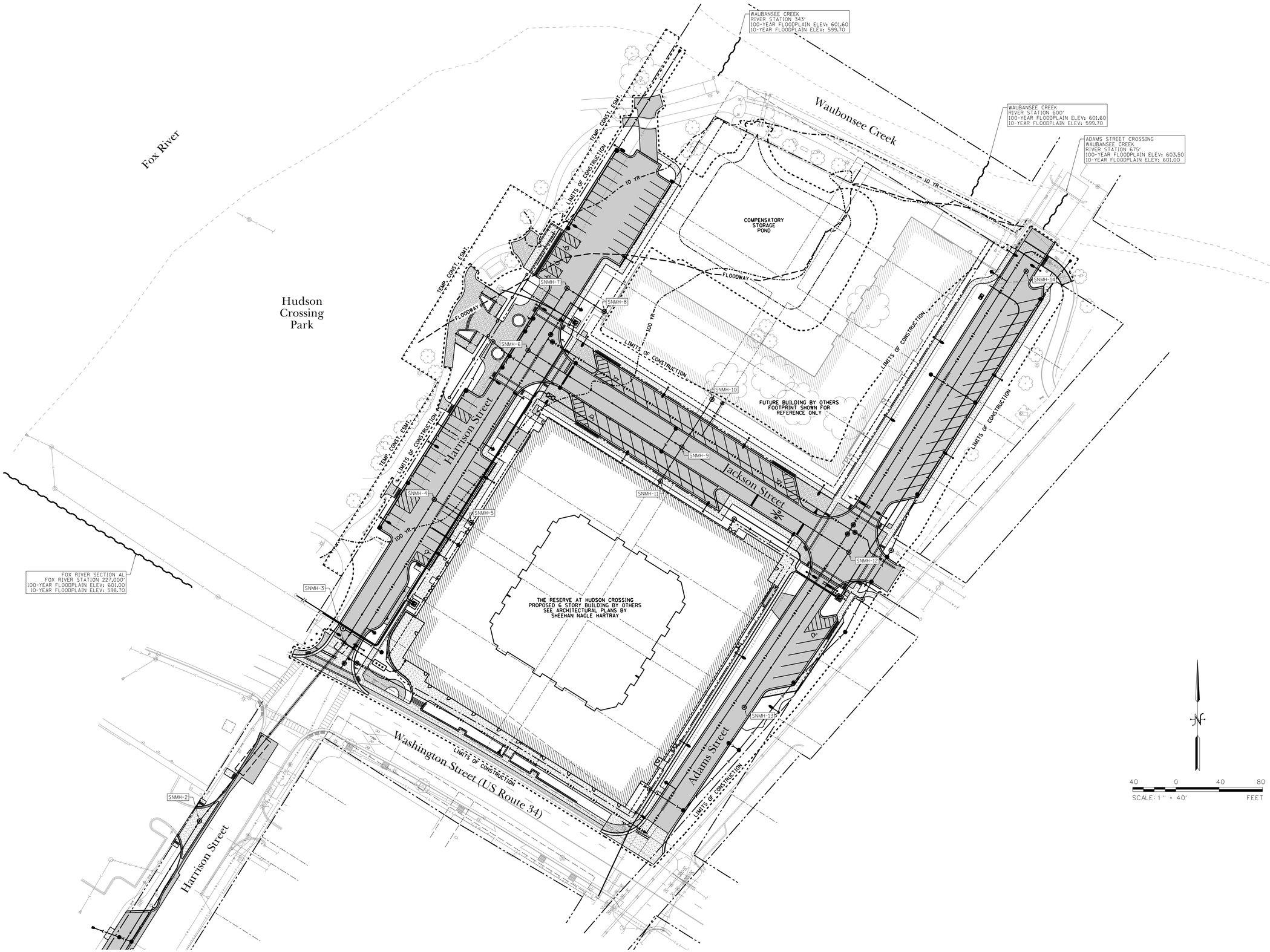

PROJECT STAFF		ISSUE	REVISIONS	DATE
PROJECT MANAGER:				
ENGINEER:				
ENGINEER:				
ENGINEER:				
TECHNICIAN:		5.	ISSUED FOR BIDDING	2/21/19
TECHNICIAN:		4.	PER VILLAGE OF OSWEGO, IDOT, FOX METRO	2/15/19
TECHNICIAN:		3.	REVISIONS PER VILLAGE OF OSWEGO REVIEW	1/11/19
		2.	REVISIONS PER VILLAGE OF OSWEGO REVIEW	12/4/18
		1.	REVISIONS PER VILLAGE OF OSWEGO REVIEW	11/21/18

TROTTER ASSOCIATES, INC.
ENGINEERS AND SURVEYORS
400 N. Orchard Road, Suite D
Naperville, Illinois 60563
Ph. (630)-587-0170 • Fax (630)-587-0175

The Reserve at Hudson Crossing - Roadway Improvements

Overall Site Plan

Oswego, Kendall County, Illinois

Project No.:	SH0002
File Name:	14_SITE.dgn
Issue Date:	2/21/2019
Scale:	1" = 40'
Sheet Number	14

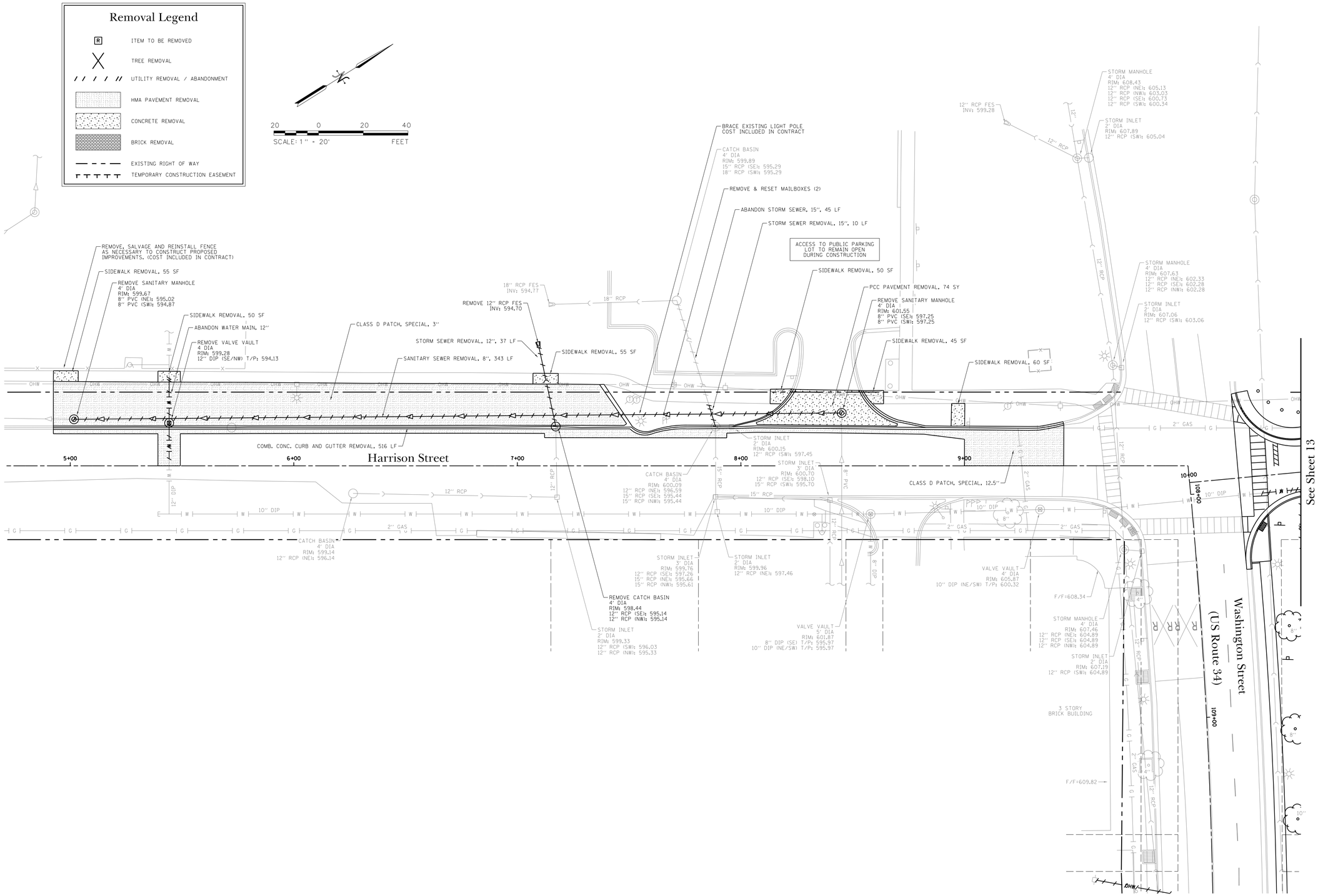

DATE	REVISIONS	ISSUE
2/21/19	ISSUED FOR BIDDING	5.
2/15/19	PER VILLAGE OF OSWEGO, IDOT, FOX METRO	4.
1/11/19	REVISIONS PER VILLAGE OF OSWEGO REVIEW	3.
12/4/18	REVISIONS PER VILLAGE OF OSWEGO REVIEW	2.
11/21/18	REVISIONS PER VILLAGE OF OSWEGO REVIEW	1.

PROJECT STAFF
PROJECT MANAGER:
ENGINEER:
ENGINEER:
ENGINEER:
TECHNICIAN:
TECHNICIAN:

TROTTER ASSOCIATES, INC.
ENGINEERS AND SURVEYORS
4109 W. Verson Road, Suite D
Morris, Illinois 60450
Ph: 630-587-0170 • Fax: 630-587-0175

The Reserve at Hudson Crossing - Roadway Improvements

Removal Plan - Harrison Street

Oswego, Kendall County, Illinois

Project No.:	SH0002
File Name:	15_REM_HAR.dgn
Issue Date:	2/21/2019
Scale:	1" = 20'
Sheet Number	15

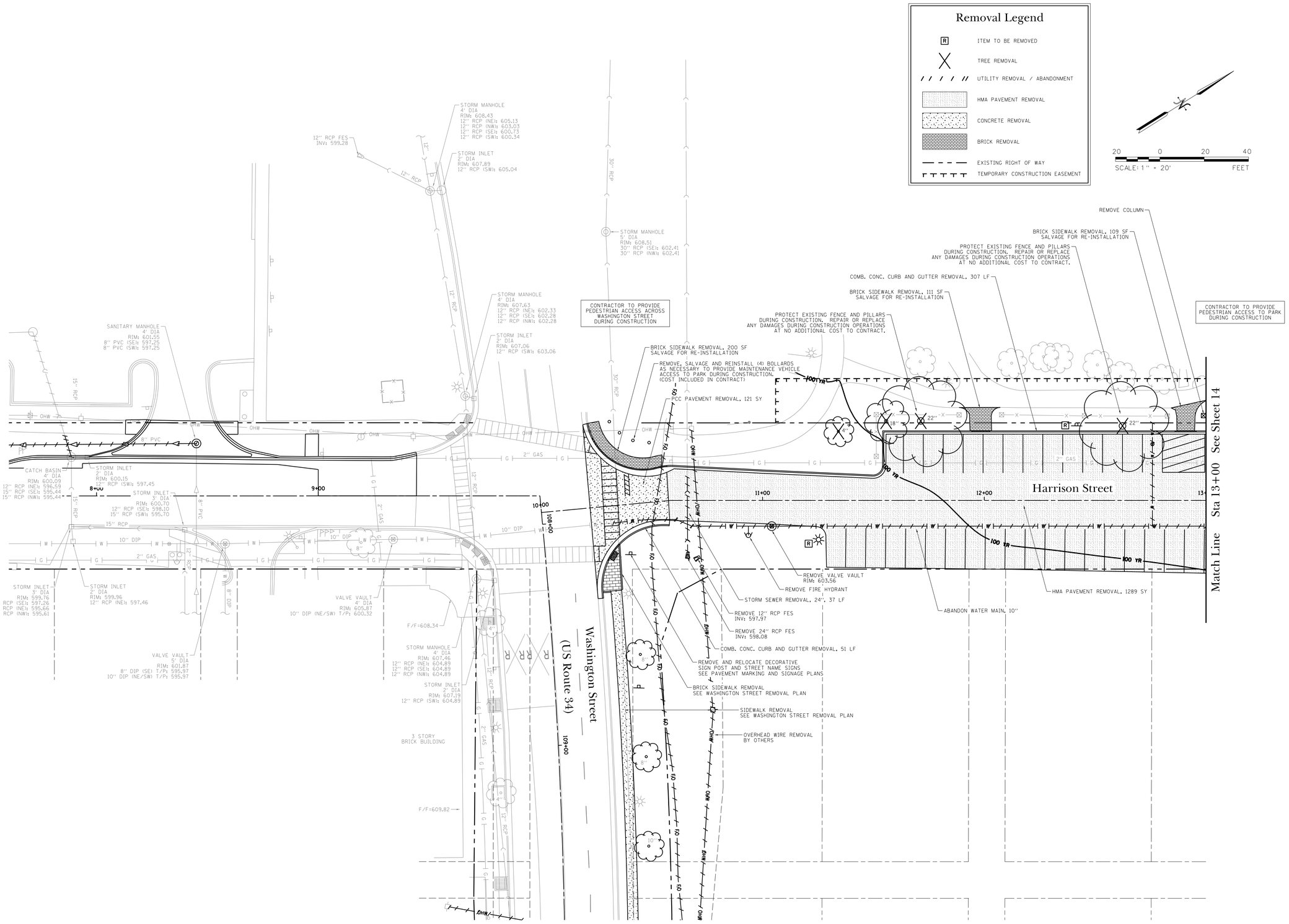

DATE	REVISIONS	ISSUE
2/21/19	ISSUED FOR BIDDING	5.
2/15/19	PER VILLAGE OF OSWEGO, IDOT, FOX METRO	4.
1/11/19	REVISIONS PER VILLAGE OF OSWEGO REVIEW	3.
12/4/18	REVISIONS PER VILLAGE OF OSWEGO REVIEW	2.
11/21/18	REVISIONS PER VILLAGE OF OSWEGO REVIEW	1.

PROJECT STAFF
PROJECT MANAGER:
ENGINEER:
ENGINEER:
ENGINEER:
TECHNICIAN:
TECHNICIAN:

TROTTER ASSOCIATES, INC.
ENGINEERS AND SURVEYORS
40920 N. Union Roadt, Suite D
Oswego, Illinois 60543
Ph: 630-587-0170 • Fax: 630-587-0175

The Reserve at Hudson Crossing - Roadway Improvements

Removal Plan - Harrison Street

Oswego, Kendall County, Illinois

Project No.:	SH0002
File Name:	16_REM_HAR.dgn
Issue Date:	2/21/2019
Scale:	1" = 20'
Sheet Number	16

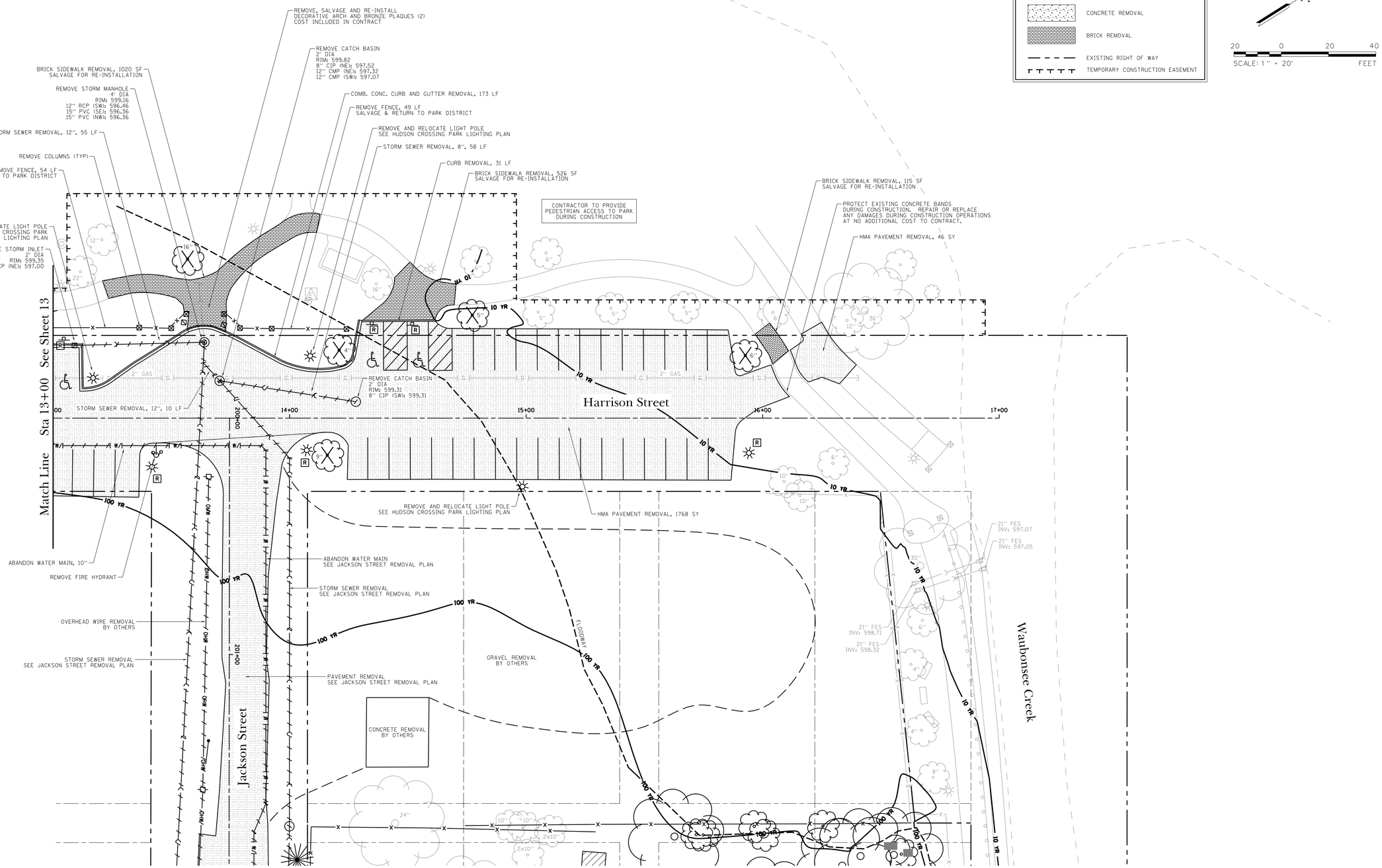

DATE	REVISIONS	ISSUE
2/21/19	ISSUED FOR BIDDING	5.
2/15/19	PER VILLAGE OF OSWEGO, IDOT, FOX METRO	4.
1/11/19	REVISIONS PER VILLAGE OF OSWEGO REVIEW	3.
12/4/18	REVISIONS PER VILLAGE OF OSWEGO REVIEW	2.
11/21/18	REVISIONS PER VILLAGE OF OSWEGO REVIEW	1.

PROJECT STAFF
PROJECT MANAGER:
ENGINEER:
ENGINEER:
ENGINEER:
TECHNICIAN:
TECHNICIAN:

TROTTER ASSOCIATES, INC.
ENGINEERS AND SURVEYORS
400 W. Nelson Roadd, Suite D
Lombard, Illinois 60148
Ph.: 630-587-0170 • Fax: 630-587-0175

The Reserve at Hudson Crossing - Roadway Improvements

Removal Plan - Harrison Street

Oswego, Kendall County, Illinois

Project No.: SH0002
File Name: 17_REM_HAR.dgn
Issue Date: 2/21/2019
Scale: 1" = 20'
Sheet Number
17

Removal Legend

- R — ITEM TO BE REMOVED
- TREE REMOVAL
- UTILITY REMOVAL / ABANDONMENT
- HMA PAVEMENT REMOVAL
- CONCRETE REMOVAL
- BRICK REMOVAL
- EXISTING RIGHT OF WAY
- TEMPORARY CONSTRUCTION EASEMENT

20 0 20 40
SCALE: 1" = 20' FEET

DATE	REVISIONS	ISSUE
2/21/19	ISSUED FOR BIDDING	5.
2/15/19	PER VILLAGE OF OSWEGO, IDOT, FOX METRO	4.
1/11/19	REVISIONS PER VILLAGE OF OSWEGO REVIEW	3.
12/4/18	REVISIONS PER VILLAGE OF OSWEGO REVIEW	2.
11/21/18	REVISIONS PER VILLAGE OF OSWEGO REVIEW	1.

PROJECT STAFF
PROJECT MANAGER:
ENGINEER:
ENGINEER:
ENGINEER:
TECHNICIAN:
TECHNICIAN:

TROTTER ASSOCIATES, INC.
ENGINEERS AND SURVEYORS
400-201 Venus Boulevard, Suite D
Oswego, Illinois 60543
Ph: 630-587-0170 • Fax: 630-587-0175

The Reserve at Hudson Crossing - Roadway Improvements

Removal Plan - Adams Street

Oswego, Kendall County, Illinois

Project No.: SH0002
File Name: 18_REM_ADAMS.dgn
Issue Date: 2/21/2019
Scale: 1" = 20'
Sheet Number
18

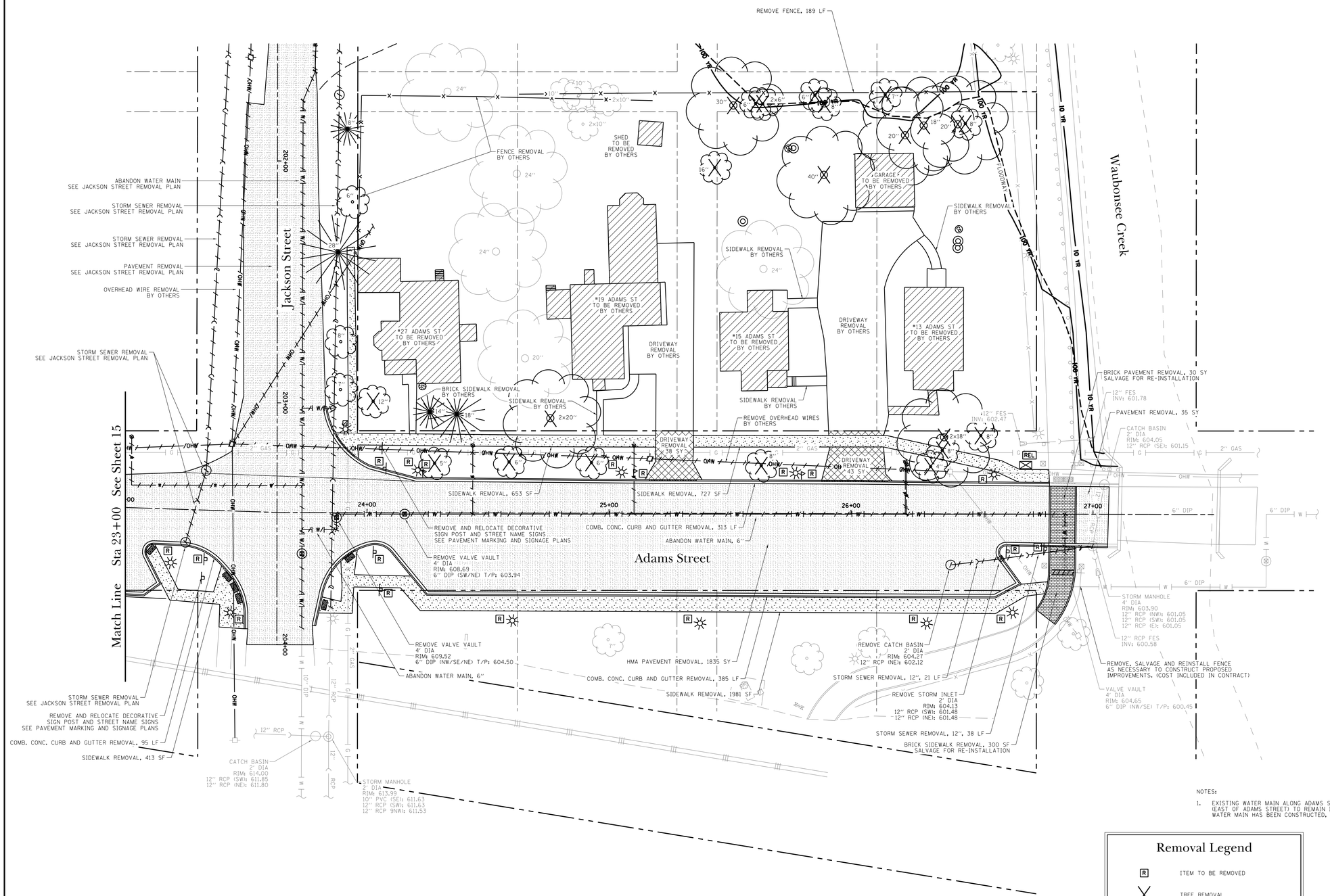

NOTES:

1. EXISTING WATER MAIN ALONG ADAMS STREET & JACKSON STREET (EAST OF ADAMS STREET) TO REMAIN IN OPERATION UNTIL PROPOSED WATER MAIN HAS BEEN CONSTRUCTED, TESTED, AND ACCEPTED.

Removal Legend

- ITEM TO BE REMOVED
- TREE REMOVAL
- UTILITY REMOVAL / ABANDONMENT
- HMA PAVEMENT REMOVAL
- CONCRETE REMOVAL
- BRICK REMOVAL
- EXISTING RIGHT OF WAY
- TEMPORARY CONSTRUCTION EASEMENT

20 0 20 40

SCALE: 1" = 20' FEET

DATE	REVISIONS	ISSUE
2/21/19	ISSUED FOR BIDDING	5.
2/15/19	PER VILLAGE OF OSWEGO, IDOT, FOX METRO	4.
1/11/19	REVISIONS PER VILLAGE OF OSWEGO REVIEW	3.
12/4/18	REVISIONS PER VILLAGE OF OSWEGO REVIEW	2.
11/21/18	REVISIONS PER VILLAGE OF OSWEGO REVIEW	1.

PROJECT STAFF
PROJECT MANAGER:
ENGINEER:
ENGINEER:
ENGINEER:
TECHNICIAN:
TECHNICIAN:

TROTTER ASSOCIATES, INC.
ENGINEERS AND SURVEYORS
4109 W. Verson Road, Suite D
Mount Vernon, Illinois 62864
Ph: 618-587-0170 • Fax: 618-587-0175

The Reserve at Hudson Crossing - Roadway Improvements

Removal Plan - Adams Street

Oswego, Kendall County, Illinois

Project No.: SH0002
File Name: 19_REM_ADAMS.dgn
Issue Date: 2/21/2019
Scale: 1" = 20'
Sheet Number
19

NOTES:

1. EXISTING WATER MAIN ALONG ADAMS STREET & JACKSON STREET (EAST OF ADAMS STREET) TO REMAIN IN OPERATION UNTIL PROPOSED WATER MAIN HAS BEEN CONSTRUCTED, TESTED, AND ACCEPTED.

Removal Legend

- ITEM TO BE REMOVED
- TREE REMOVAL
- UTILITY REMOVAL / ABANDONMENT
- HMA PAVEMENT REMOVAL
- CONCRETE REMOVAL
- BRICK REMOVAL
- EXISTING RIGHT OF WAY
- TEMPORARY CONSTRUCTION EASEMENT

20 0 20 40

SCALE: 1" = 20' FEET

ISSUE	REVISIONS	DATE
5.	ISSUED FOR BIDDING	2/21/19
4.	PER VILLAGE OF OSWEGO, IDOT, FOX METRO	2/15/19
3.	REVISIONS PER VILLAGE OF OSWEGO REVIEW	1/11/19
2.	REVISIONS PER VILLAGE OF OSWEGO REVIEW	12/4/18
1.	REVISIONS PER VILLAGE OF OSWEGO REVIEW	11/21/18

PROJECT STAFF
PROJECT MANAGER:
ENGINEER:
ENGINEER:
ENGINEER:
TECHNICIAN:
TECHNICIAN:

TROTTER ASSOCIATES, INC.
ENGINEERS AND SURVEYORS
409 W. Van Buren Road, Suite D
Oswego, Illinois 60543
Ph: 630-587-0170 • Fax: 630-587-0175

The Reserve at Hudson Crossing - Roadway Improvements

Removal Plan - Jackson Street

Oswego, Kendall County, Illinois

Project No.: SH0002

File Name: 20_REM_JACK.dgn

Issue Date: 2/21/2019

Scale: 1" = 20'

Sheet Number

20

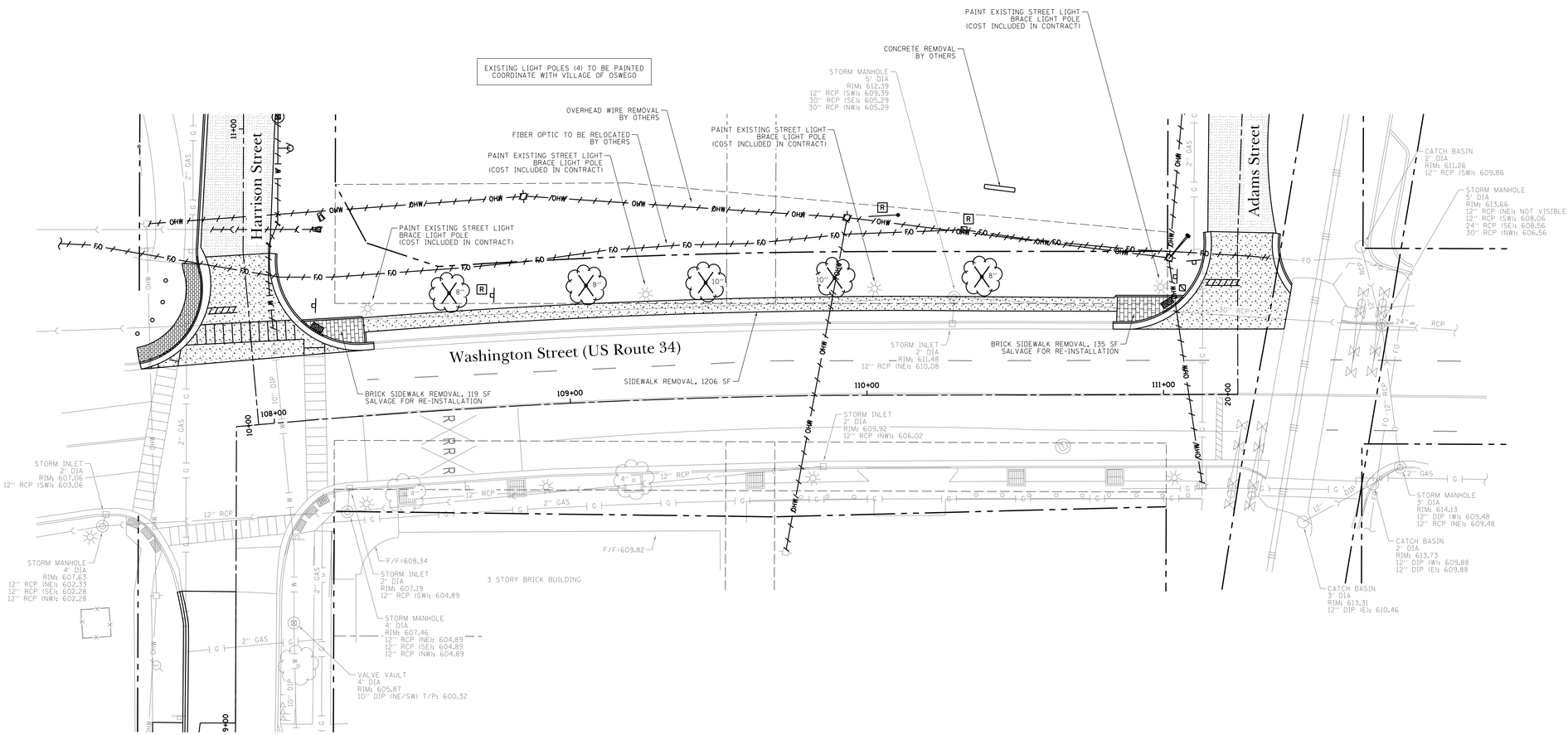

Removal Legend

- ITEM TO BE REMOVED
- TREE REMOVAL
- UTILITY REMOVAL / ABANDONMENT
- HMA PAVEMENT REMOVAL
- CONCRETE REMOVAL
- BRICK REMOVAL
- EXISTING RIGHT OF WAY
- TEMPORARY CONSTRUCTION EASEMENT

20 0 20 40
SCALE: 1" = 20' FEET

DATE	REVISIONS	ISSUE
2/21/19	ISSUED FOR BIDDING	5.
2/15/19	PER VILLAGE OF OSWEGO, IDOT, FOX METRO	4.
1/11/19	REVISIONS PER VILLAGE OF OSWEGO REVIEW	3.
12/4/18	REVISIONS PER VILLAGE OF OSWEGO REVIEW	2.
11/21/18	REVISIONS PER VILLAGE OF OSWEGO REVIEW	1.

PROJECT STAFF
PROJECT MANAGER:
ENGINEER:
ENGINEER:
ENGINEER:
TECHNICIAN:
TECHNICIAN:

TROTTER ASSOCIATES, INC.
ENGINEERS AND SURVEYORS
409/201 Veterans Boulevard, Suite D
Romeoville, Illinois 60446
Ph: 630-587-0170 • Fax: 630-587-0175

The Reserve at Hudson Crossing - Roadway Improvements

Removal Plan - Washington Street

Oswego, Kendall County, Illinois

Project No.: SH0002
File Name: 21_REM_WASH.dgn
Issue Date: 2/21/2019
Scale: 1" = 20'
Sheet Number
21

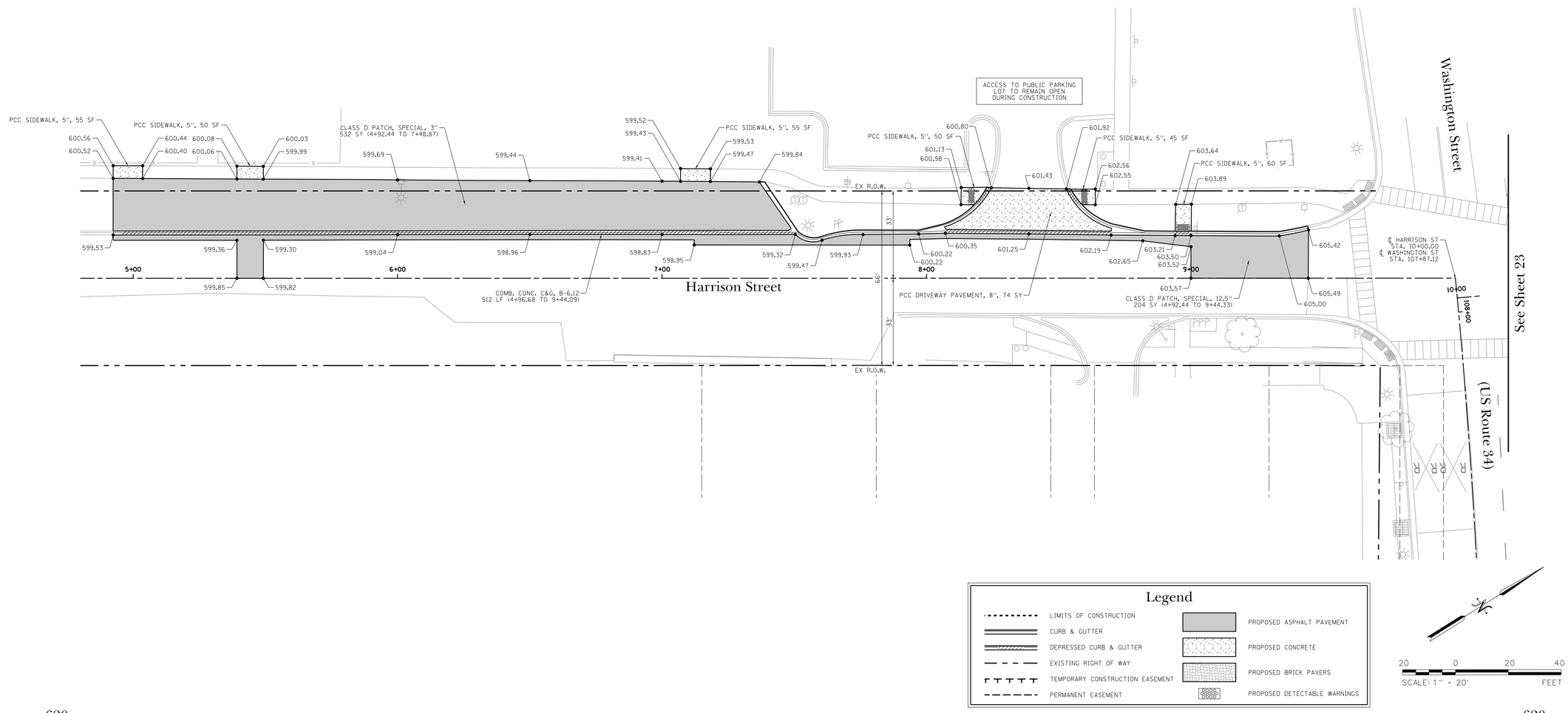

Legend

- LIMITS OF CONSTRUCTION
- CURB & GUTTER
- DEPRESSED CURB & GUTTER
- EXISTING RIGHT OF WAY
- TEMPORARY CONSTRUCTION EASEMENT
- PERMANENT EASEMENT
- PROPOSED ASPHALT PAVEMENT
- PROPOSED CONCRETE
- PROPOSED BRICK PAVERS
- PROPOSED DETECTABLE WARNINGS

20 0 20 40
SCALE: 1" = 20' FEET

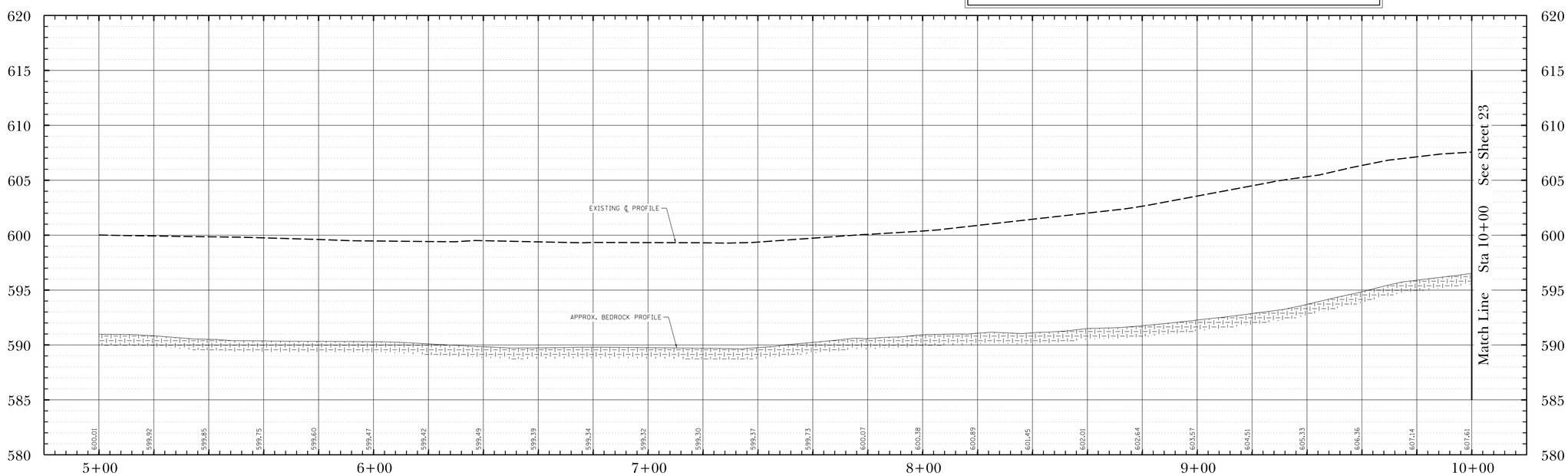

DATE	REVISIONS	ISSUE
2/21/19	ISSUED FOR BIDDING	5.
2/15/19	PER VILLAGE OF OSWEGO, IDOT, FOX METRO	4.
1/11/19	REVISIONS PER VILLAGE OF OSWEGO REVIEW	3.
12/4/18	REVISIONS PER VILLAGE OF OSWEGO REVIEW	2.
11/21/18	REVISIONS PER VILLAGE OF OSWEGO REVIEW	1.

PROJECT STAFF
PROJECT MANAGER:
ENGINEER:
ENGINEER:
ENGINEER:
TECHNICIAN:
TECHNICIAN:

TROTTER ASSOCIATES, INC.
ENGINEERS AND SURVEYORS
40W201 Wasco Roadd, Suite D
St. Charles, IL 60175
Ph. (630-587-0170 • Fax (630-587-0175

The Reserve at Hudson Crossing - Roadway Improvements
Roadway Plan and Profile
Harrison Street Sta 5+00 to Sta 10+00
Oswego, Kendall County, Illinois

Project No.: SH0002
File Name: 22_P&P_HAR.dgn
Issue Date: 2/21/2019
Scale: HORIZ: 1" = 20' VERT: 1" = 5'
Sheet Number
22

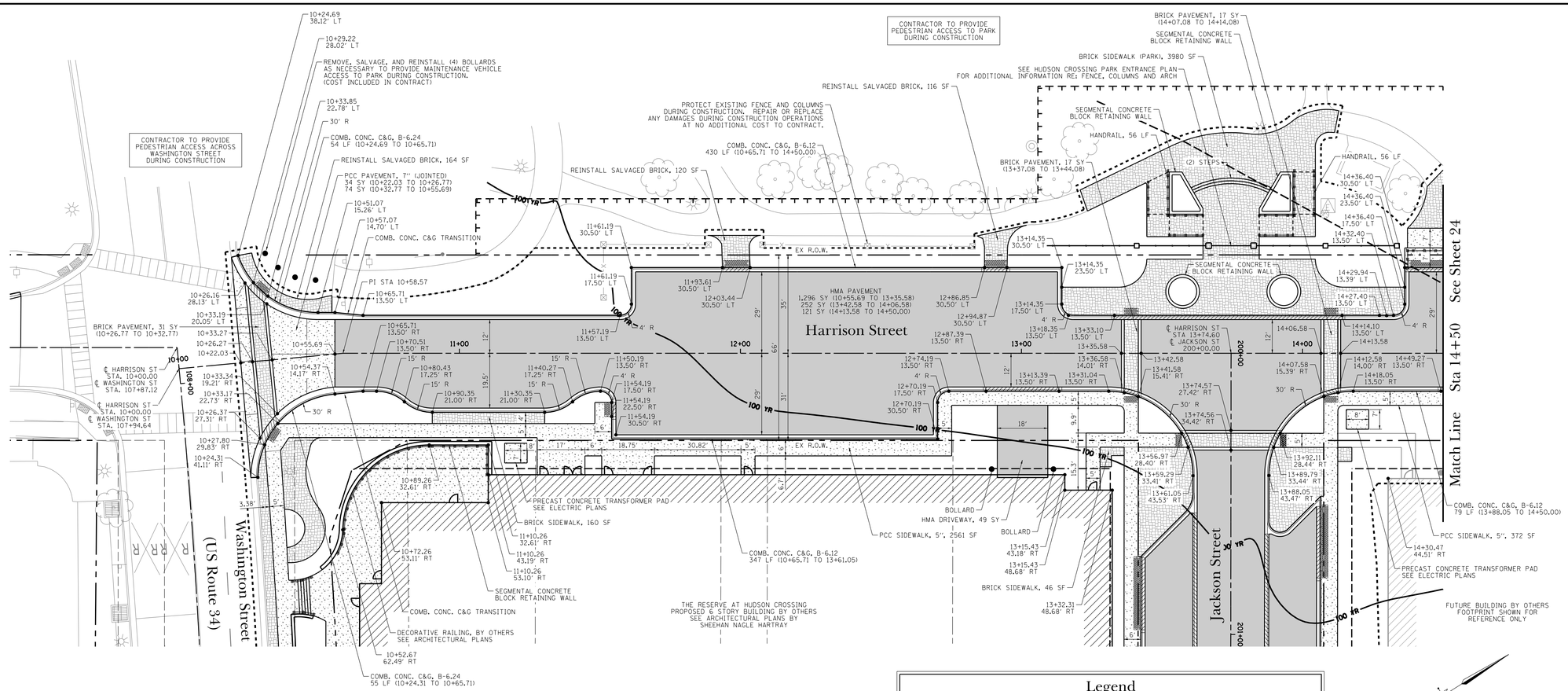

NOTES:

1. CONTRACTOR TO COORDINATE ALL WORK WITHIN HUDSON CROSSING PARK WITH VILLAGE OF OSWEGO AND PARK DISTRICT. PEDESTRIAN ACCESS TO PARK TO REMAIN OPEN AT ALL TIMES DURING CONSTRUCTION.
2. STATION / OFFSET AND CURB RETURN RADIUS SHOWN AT TOP (BACK) OF CURB UNLESS NOTED OTHERWISE.

Legend

- LIMITS OF CONSTRUCTION
- CURB & GUTTER
- DEPRESSED CURB & GUTTER
- EXISTING RIGHT OF WAY
- TEMPORARY CONSTRUCTION EASEMENT
- PERMANENT EASEMENT
- PROPOSED ASPHALT PAVEMENT
- PROPOSED CONCRETE
- PROPOSED BRICK PAVERS
- PROPOSED DETECTABLE WARNINGS

SCALE: 1" = 20' (20 0 20 40 FEET)

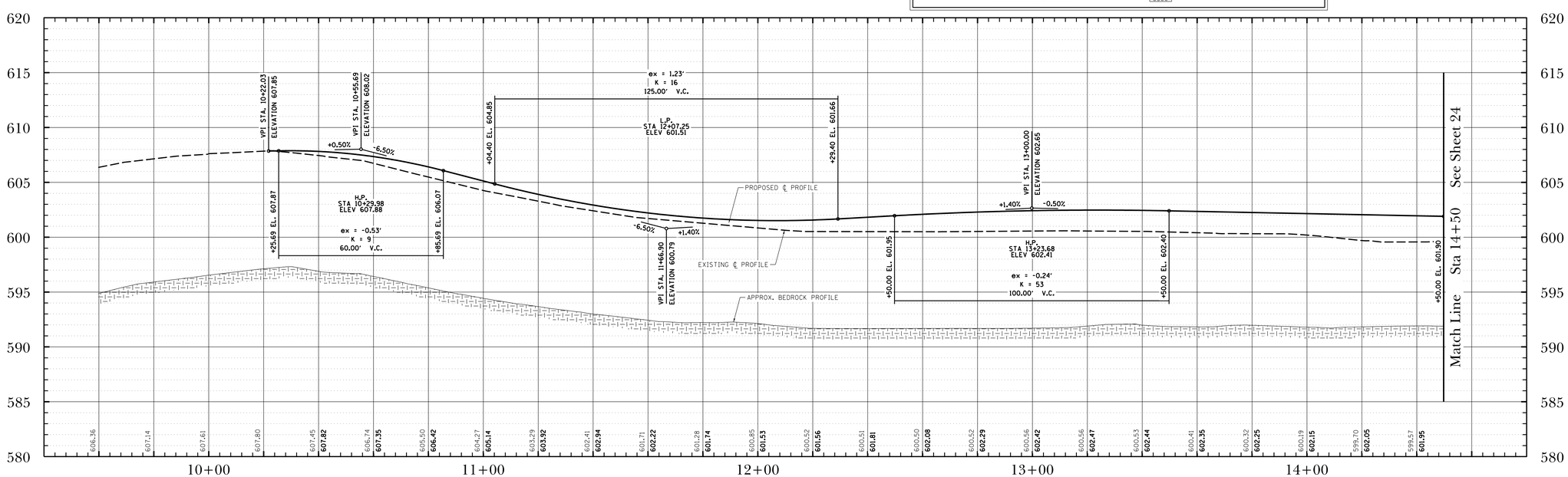

DATE	REVISIONS	ISSUE
2/21/19	ISSUED FOR BIDDING	5.
2/15/19	PER VILLAGE OF OSWEGO, IDOT, FOX METRO	4.
1/11/19	REVISIONS PER VILLAGE OF OSWEGO REVIEW	3.
12/4/18	REVISIONS PER VILLAGE OF OSWEGO REVIEW	2.
11/21/18	REVISIONS PER VILLAGE OF OSWEGO REVIEW	1.

PROJECT STAFF
PROJECT MANAGER:
ENGINEER:
ENGINEER:
ENGINEER:
TECHNICIAN:
TECHNICIAN:
TECHNICIAN:

TROTTER ASSOCIATES, INC.
ENGINEERS AND SURVEYORS
409/201 Veterans Roadt, Suite D
Bloomingdale, Illinois 60108
Ph: 630-587-0170 • Fax: 630-587-0175

The Reserve at Hudson Crossing - Roadway Improvements
Roadway Plan and Profile
Harrison Street Sta 10+00 to Sta 14+50
Oswego, Kendall County, Illinois

Project No.: SH0002
File Name: 23_P&P_HAR.dgn
Issue Date: 2/21/2019
Scale: HORIZ: 1" = 20' VERT: 1" = 5'
Sheet Number
23

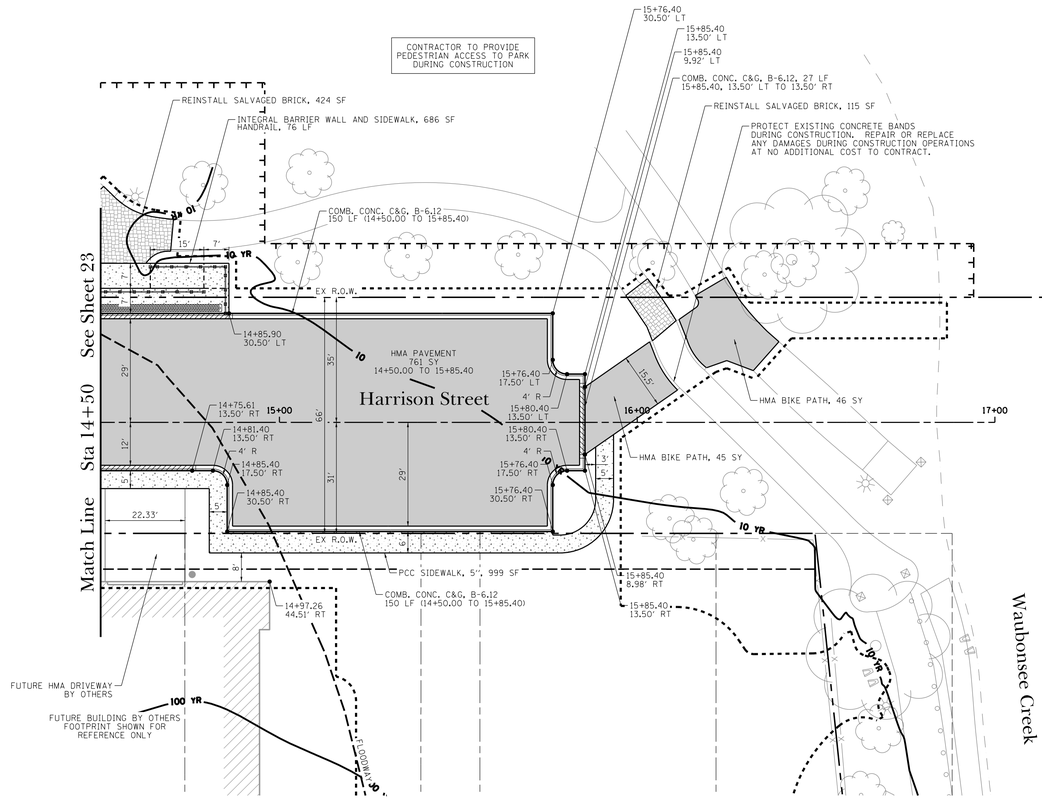

NOTES:

1. CONTRACTOR TO COORDINATE ALL WORK WITHIN HUDSON CROSSING PARK WITH VILLAGE OF OSWEGO AND PARK DISTRICT. PEDESTRIAN ACCESS TO PARK TO REMAIN OPEN AT ALL TIMES DURING CONSTRUCTION.
2. STATION / OFFSET AND CURB RETURN RADIUS SHOWN AT TOP (BACK) OF CURB UNLESS NOTED OTHERWISE.

Legend

- LIMITS OF CONSTRUCTION
- CURB & GUTTER
- DEPRESSED CURB & GUTTER
- EXISTING RIGHT OF WAY
- TEMPORARY CONSTRUCTION EASEMENT
- PERMANENT EASEMENT
- PROPOSED ASPHALT PAVEMENT
- PROPOSED CONCRETE
- PROPOSED BRICK PAVERS
- PROPOSED DETECTABLE WARNINGS

20 0 20 40
SCALE: 1" = 20' FEET

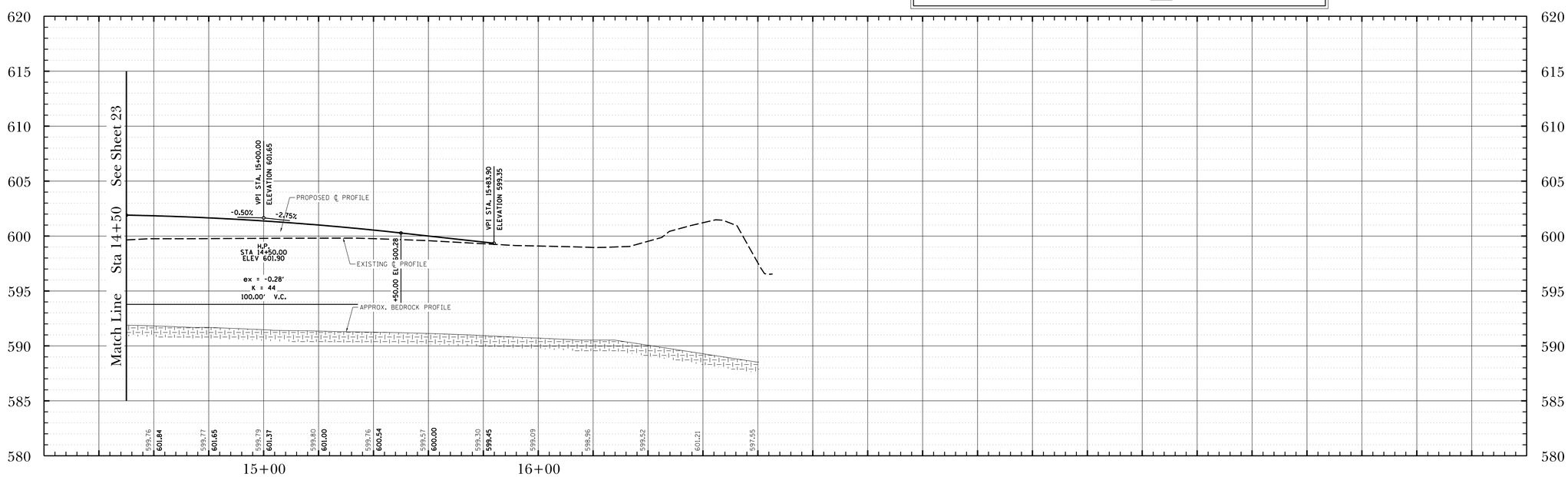

DATE	REVISIONS	ISSUE
2/21/19	ISSUED FOR BIDDING	5.
2/15/19	PER VILLAGE OF OSWEGO, IDOT, FOX METRO	4.
1/11/19	REVISIONS PER VILLAGE OF OSWEGO REVIEW	3.
12/4/18	REVISIONS PER VILLAGE OF OSWEGO REVIEW	2.
11/21/18	REVISIONS PER VILLAGE OF OSWEGO REVIEW	1.

PROJECT STAFF
PROJECT MANAGER:
ENGINEER:
ENGINEER:
ENGINEER:
TECHNICIAN:
TECHNICIAN:

TROTTER ASSOCIATES, INC.
ENGINEERS AND SURVEYORS
400 N. Main Road, Suite D
Oswego, Illinois 60543
Ph. 630-587-0170 • Fax 630-587-0175

The Reserve at Hudson Crossing - Roadway Improvements
Roadway Plan and Profile
Harrison Street Sta 14+50 to Sta 17+00
Oswego, Kendall County, Illinois

Project No.: SH0002
File Name: 24_P&P_HAR.dgn
Issue Date: 2/21/2019
Scale: HORIZ: 1" = 20' VERT: 1" = 5'
Sheet Number
24

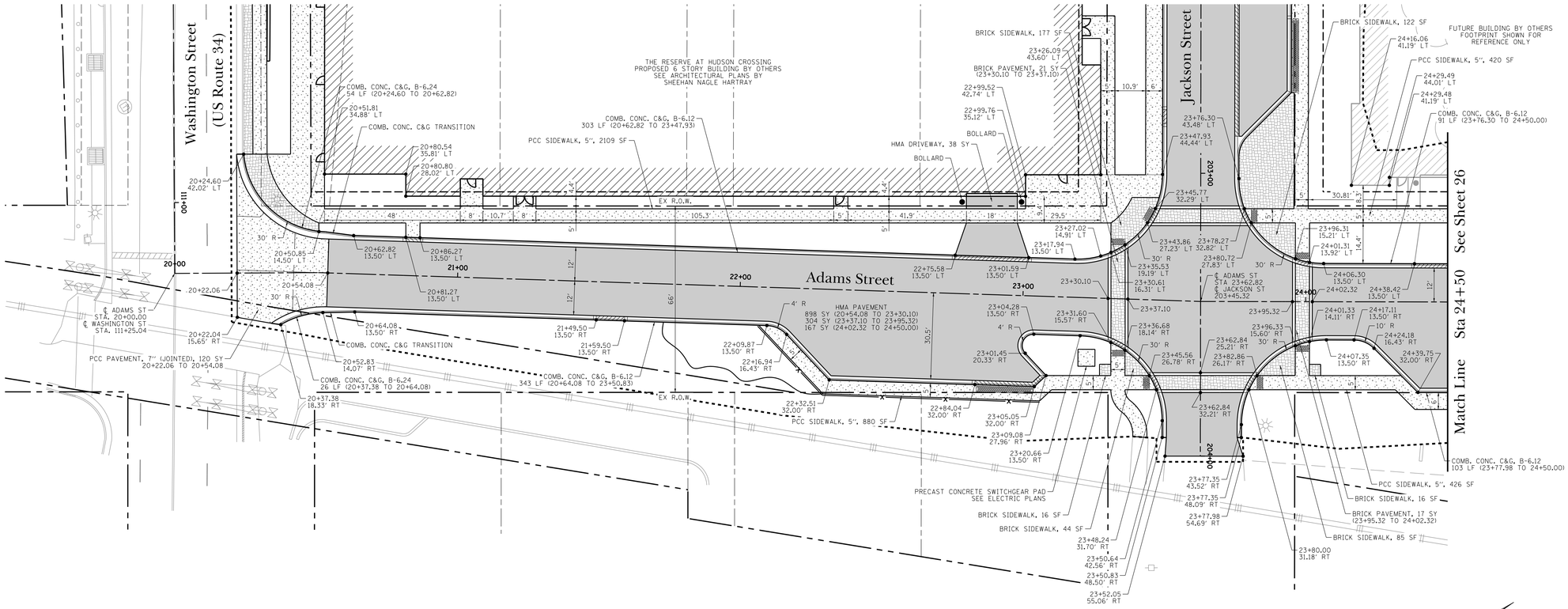

NOTES:

1. STATION / OFFSET AND CURB RETURN RADIUS SHOWN AT TOP (BACK) OF CURB UNLESS NOTED OTHERWISE.

Legend

- LIMITS OF CONSTRUCTION
- CURB & GUTTER
- DEPRESSED CURB & GUTTER
- EXISTING RIGHT OF WAY
- TEMPORARY CONSTRUCTION EASEMENT
- PERMANENT EASEMENT
- PROPOSED ASPHALT PAVEMENT
- PROPOSED CONCRETE
- PROPOSED BRICK PAVERS
- PROPOSED DETECTABLE WARNINGS

20 0 20 40
SCALE: 1" = 20' FEET

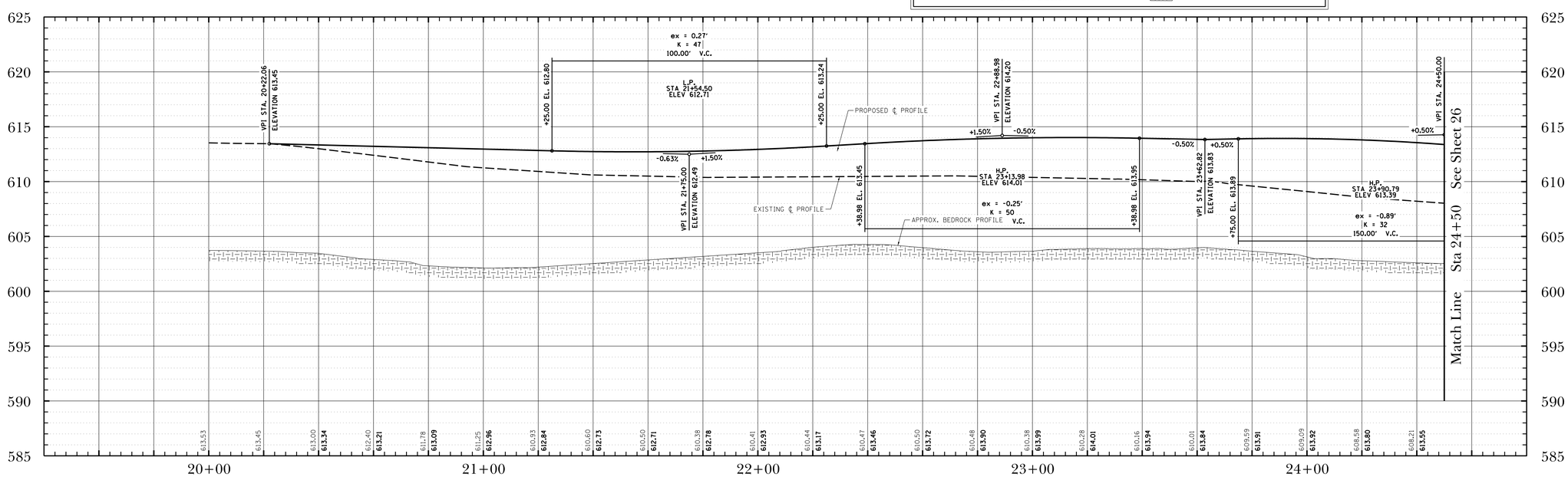

DATE	REVISIONS	ISSUE
2/21/19	ISSUED FOR BIDDING	5.
2/15/19	PER VILLAGE OF OSWEGO, IDOT, FOX METRO	4.
1/11/19	REVISIONS PER VILLAGE OF OSWEGO REVIEW	3.
12/4/18	REVISIONS PER VILLAGE OF OSWEGO REVIEW	2.
11/21/18	REVISIONS PER VILLAGE OF OSWEGO REVIEW	1.

PROJECT STAFF
PROJECT MANAGER:
ENGINEER:
ENGINEER:
ENGINEER:
TECHNICIAN:
TECHNICIAN:

TROTTER ASSOCIATES, INC.
ENGINEERS AND SURVEYORS
409/201 Veterans Roadd, Suite D
Bloomingdale, Illinois 60108
Ph. 630-587-0170 • Fax 630-587-0175

The Reserve at Hudson Crossing - Roadway Improvements
Roadway Plan and Profile
Adams Street Sta 20+00 to Sta 24+50
Oswego, Kendall County, Illinois

Project No.: SH0002
File Name: 25_P&P_ADAMS.dgn
Issue Date: 2/21/2019
Scale: HORIZ: 1" = 20' VERT: 1" = 5'
Sheet Number
25

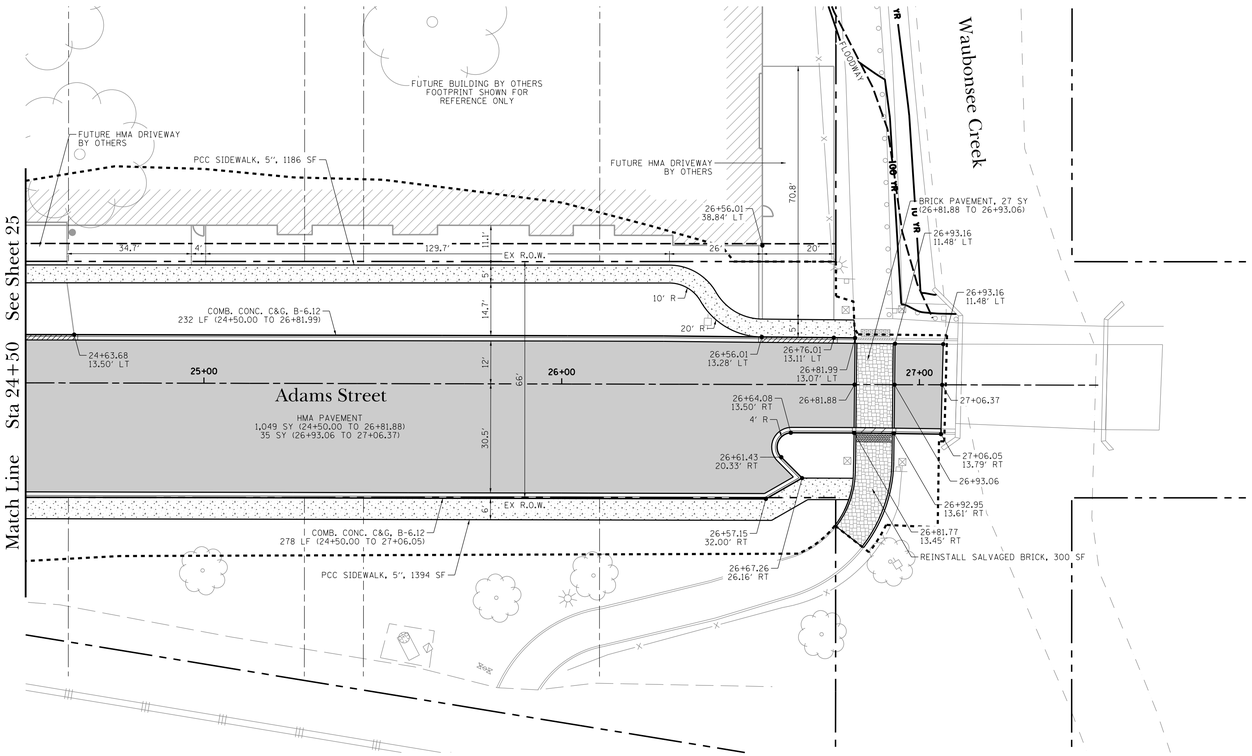

NOTES:

1. STATION / OFFSET AND CURB RETURN RADIUS SHOWN AT TOP (BACK) OF CURB UNLESS NOTED OTHERWISE.

Legend

- LIMITS OF CONSTRUCTION
- CURB & GUTTER
- DEPRESSED CURB & GUTTER
- EXISTING RIGHT OF WAY
- TEMPORARY CONSTRUCTION EASEMENT
- PERMANENT EASEMENT
- PROPOSED ASPHALT PAVEMENT
- PROPOSED CONCRETE
- PROPOSED BRICK PAVERS
- PROPOSED DETECTABLE WARNINGS

20 0 20 40
SCALE: 1" = 20' FEET

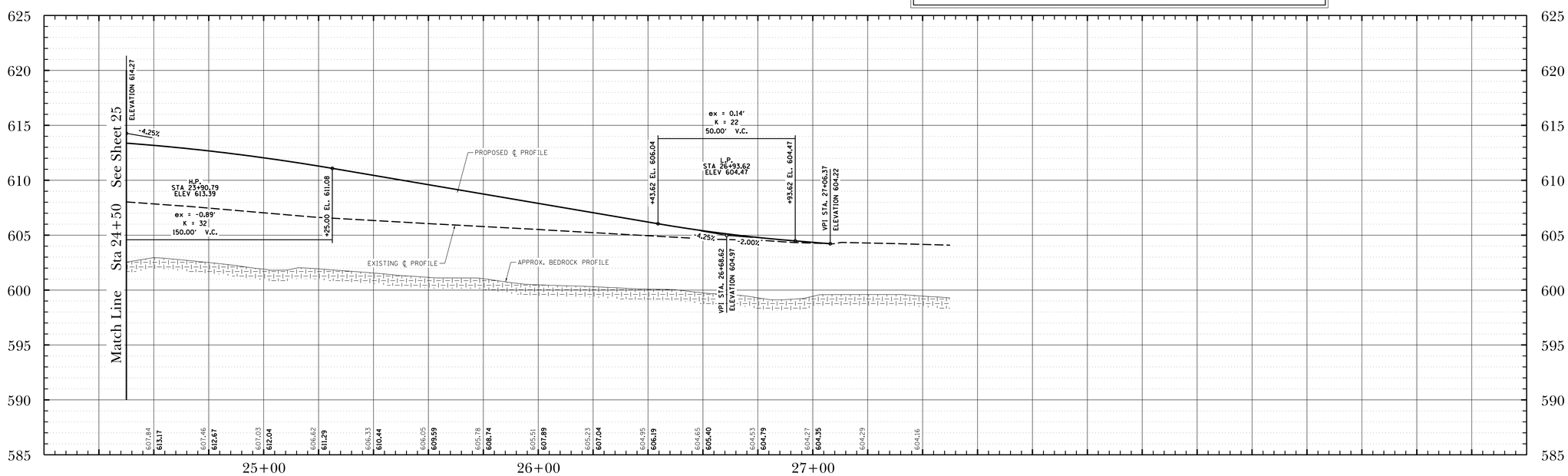

The Reserve at Hudson Crossing - Roadway Improvements
Roadway Plan and Profile
Adams Street Sta 24+50 to Sta 27+50
Oswego, Kendall County, Illinois

DATE	REVISIONS	ISSUE
2/21/19	ISSUED FOR BIDDING	5.
2/15/19	PER VILLAGE OF OSWEGO, IDOT, FOX METRO	4.
1/11/19	REVISIONS PER VILLAGE OF OSWEGO REVIEW	3.
12/4/18	REVISIONS PER VILLAGE OF OSWEGO REVIEW	2.
11/21/18	REVISIONS PER VILLAGE OF OSWEGO REVIEW	1.

PROJECT STAFF
PROJECT MANAGER:
ENGINEER:
ENGINEER:
ENGINEER:
TECHNICIAN:
TECHNICIAN:

TROTTER ASSOCIATES, INC.
ENGINEERS AND SURVEYORS
400 N. Main Road, Suite D
Oswego, Illinois 60543
Ph. 630-587-0170 • Fax 630-587-0175

Project No.: SH0002
File Name: 26_P&P_ADAMS.dgn
Issue Date: 2/21/2019
Scale: HORIZ: 1" = 20' VERT: 1" = 5'
Sheet Number
26

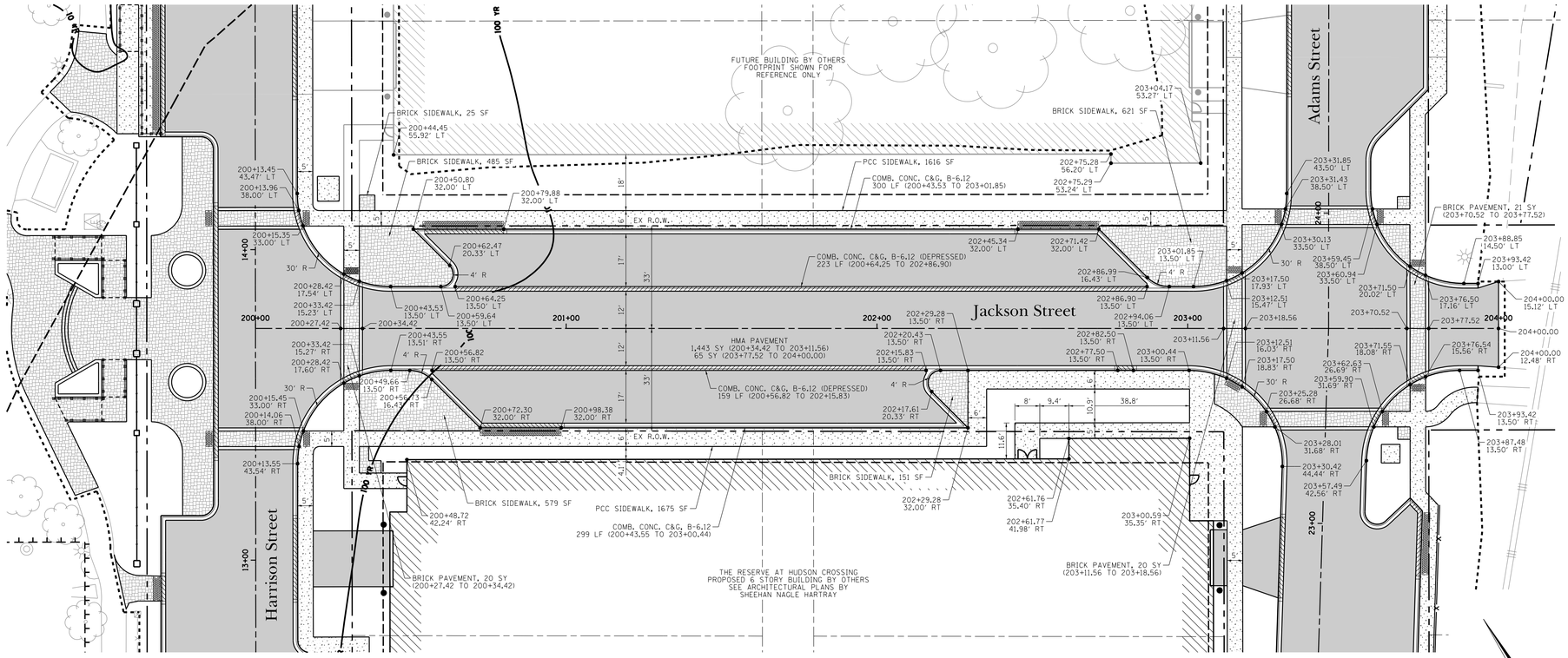

NOTES:

1. STATION / OFFSET AND CURB RETURN RADIUS SHOWN AT TOP (BACK) OF CURB UNLESS NOTED OTHERWISE.

Legend

- LIMITS OF CONSTRUCTION
- CURB & GUTTER
- DEPRESSED CURB & GUTTER
- EXISTING RIGHT OF WAY
- TEMPORARY CONSTRUCTION EASEMENT
- PERMANENT EASEMENT
- PROPOSED ASPHALT PAVEMENT
- PROPOSED CONCRETE
- PROPOSED BRICK PAVERS
- PROPOSED DETECTABLE WARNINGS

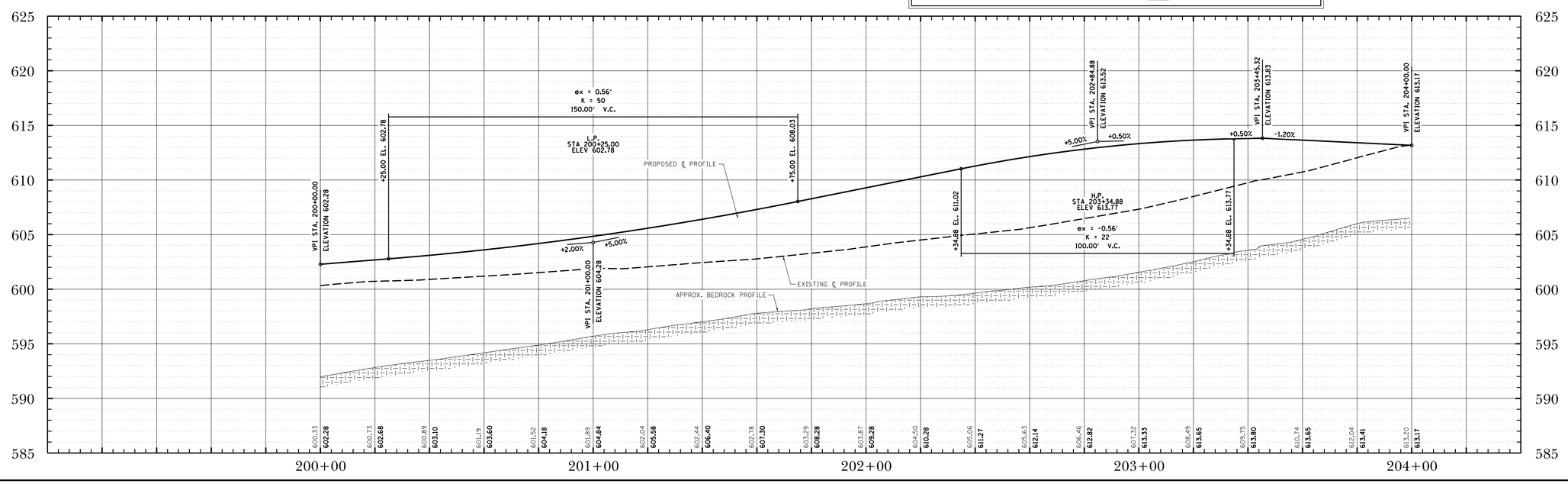

Issue	Date
5. ISSUED FOR BIDDING	2/21/19
4. PER VILLAGE OF OSWEGO, IDOT, FOX METRO	2/15/19
3. REVISIONS PER VILLAGE OF OSWEGO REVIEW	1/11/19
2. REVISIONS PER VILLAGE OF OSWEGO REVIEW	12/4/18
1. REVISIONS PER VILLAGE OF OSWEGO REVIEW	11/21/18

PROJECT STAFF
PROJECT MANAGER:
ENGINEER:
ENGINEER:
ENGINEER:
TECHNICIAN:
TECHNICIAN:

TROTTER ASSOCIATES, INC.
ENGINEERS AND SURVEYORS
409 W. Veterans Parkway, Suite D
Yorkville, Illinois 60560
Ph. 630-587-0170 • Fax: 630-587-0175

The Reserve at Hudson Crossing - Roadway Improvements
Roadway Plan and Profile
Jackson Street Sta 200+00 to Sta 203+45.32
Oswego, Kendall County, Illinois

Project No.: SH0002
File Name: 27_P&P_JACK.dgn
Issue Date: 2/21/2019
Scale: HORIZ: 1" = 20' VERT: 1" = 5'
Sheet Number
27

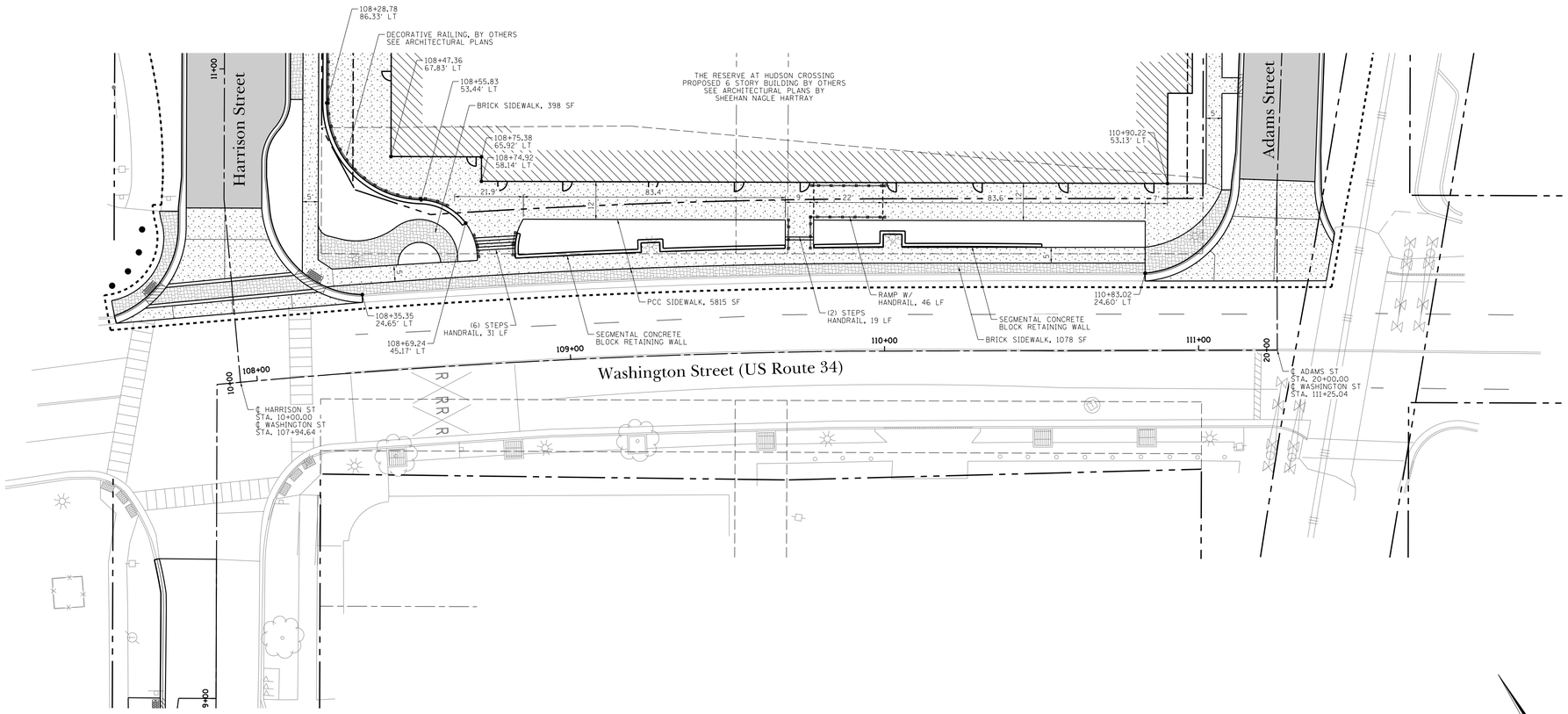

NOTES:

1. STATION / OFFSET AND CURB RETURN RADIUS SHOWN AT TOP (BACK) OF CURB UNLESS NOTED OTHERWISE.

Legend

- LIMITS OF CONSTRUCTION
- CURB & GUTTER
- DEPRESSED CURB & GUTTER
- EXISTING RIGHT OF WAY
- TEMPORARY CONSTRUCTION EASEMENT
- PERMANENT EASEMENT
- PROPOSED ASPHALT PAVEMENT
- PROPOSED CONCRETE
- PROPOSED BRICK PAVERS
- PROPOSED DETECTABLE WARNINGS

20 0 20 40
SCALE: 1" = 20' FEET

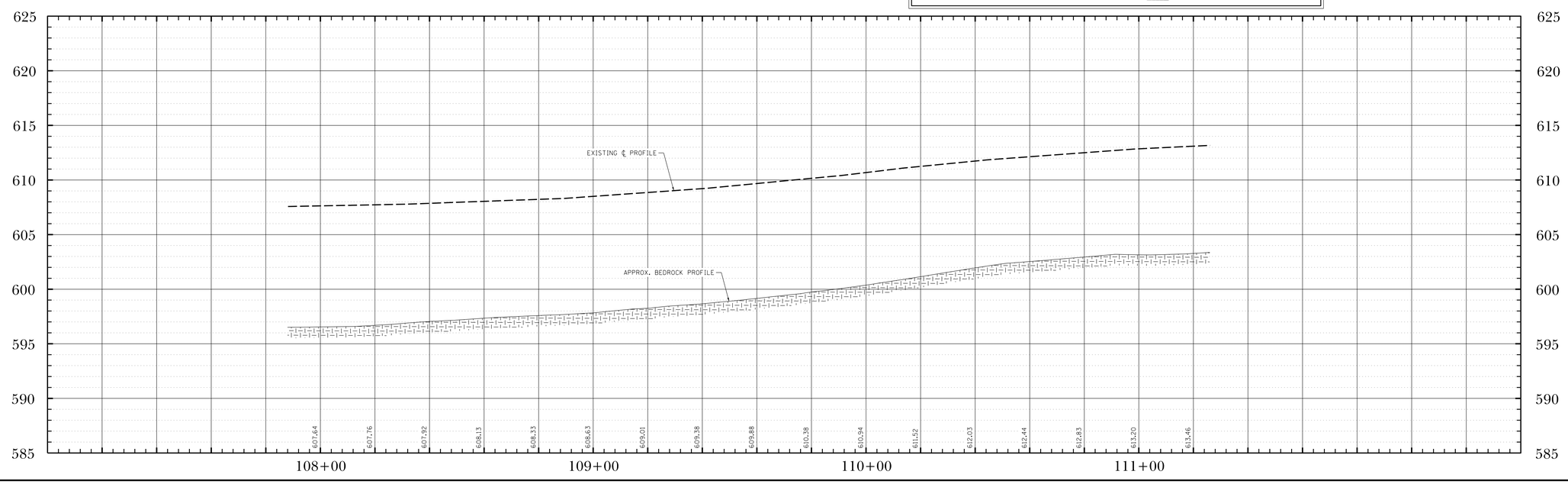

ISSUE	REVISIONS	DATE
5.	ISSUED FOR BIDDING	2/21/19
4.	PER VILLAGE OF OSWEGO, IDOT, FOX METRO	2/15/19
3.	REVISIONS PER VILLAGE OF OSWEGO REVIEW	1/11/19
2.	REVISIONS PER VILLAGE OF OSWEGO REVIEW	12/4/18
1.	REVISIONS PER VILLAGE OF OSWEGO REVIEW	11/21/18

PROJECT STAFF
PROJECT MANAGER:
ENGINEER:
ENGINEER:
ENGINEER:
TECHNICIAN:
TECHNICIAN:

TROTTER ASSOCIATES, INC.
ENGINEERS AND SURVEYORS
400 W. Velasco Roadt, Suite D
Oswego, Illinois 60543
Ph.: 630-587-0170 • Fax: 630-587-0175

The Reserve at Hudson Crossing - Roadway Improvements
Roadway Plan and Profile
Washington Street Sta 107+94.64 to Sta 111+25.04
Oswego, Kendall County, Illinois

Project No.: SH0002
File Name: 28_P&P_WASH.dgn
Issue Date: 2/21/2019
Scale: HORIZ: 1" = 20' VERT: 1" = 5'
Sheet Number
28

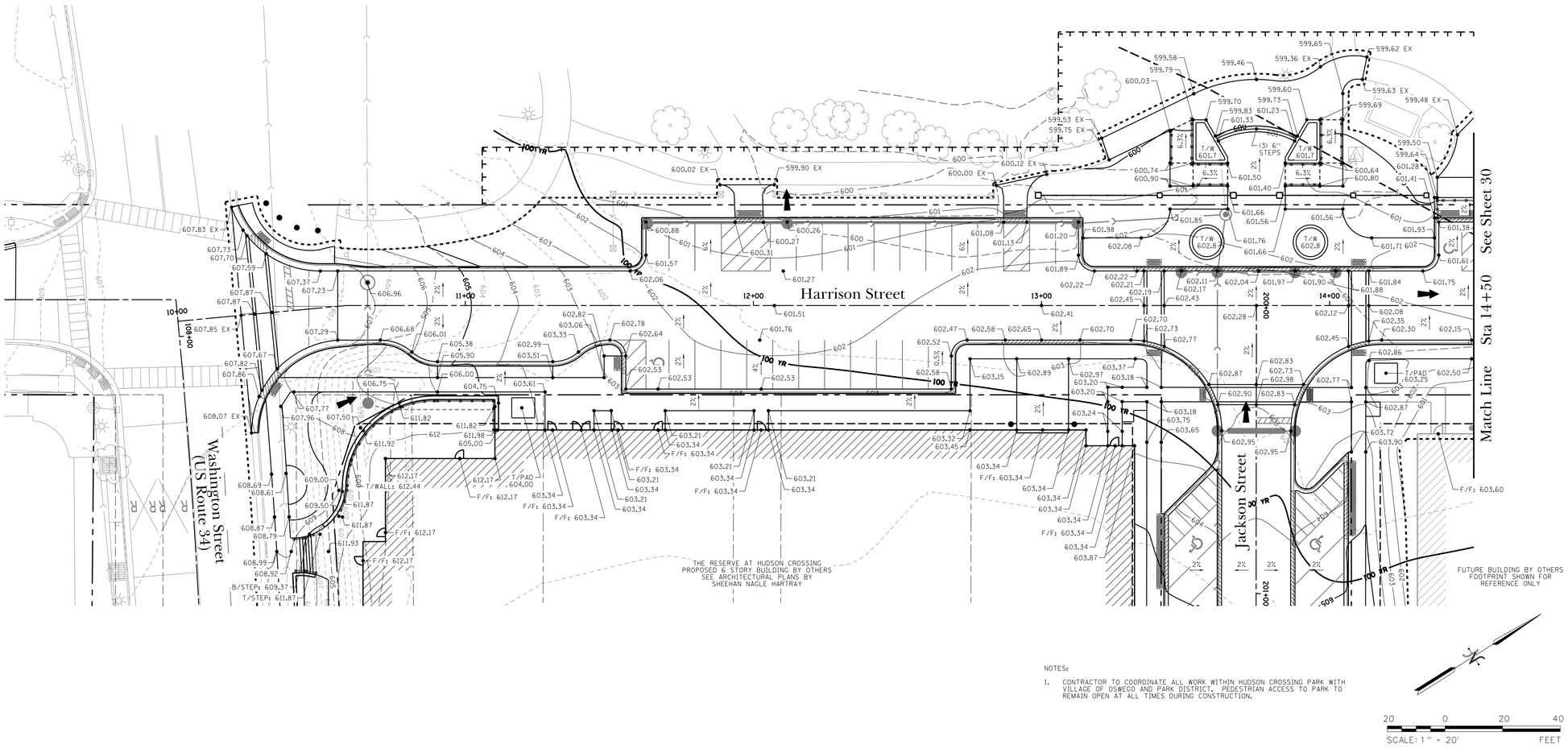

NOTES:

1. CONTRACTOR TO COORDINATE ALL WORK WITHIN HUDSON CROSSING PARK WITH VILLAGE OF OSWEGO AND PARK DISTRICT. PEDESTRIAN ACCESS TO PARK TO REMAIN OPEN AT ALL TIMES DURING CONSTRUCTION.

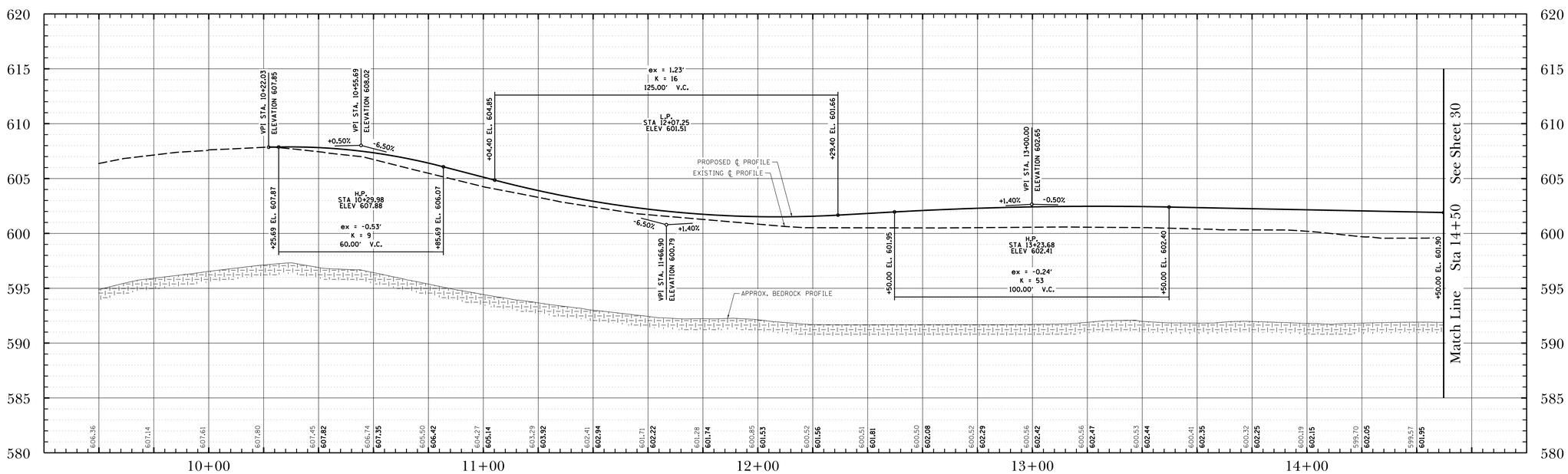

DATE	REVISIONS	ISSUE
2/21/19	ISSUED FOR BIDDING	5.
2/15/19	PER VILLAGE OF OSWEGO, IDOT, FOX METRO	4.
1/11/19	REVISIONS PER VILLAGE OF OSWEGO REVIEW	3.
12/4/18	REVISIONS PER VILLAGE OF OSWEGO REVIEW	2.
11/21/18	REVISIONS PER VILLAGE OF OSWEGO REVIEW	1.

PROJECT STAFF
PROJECT MANAGER:
ENGINEER:
ENGINEER:
ENGINEER:
TECHNICIAN:
TECHNICIAN:

TROTTER ASSOCIATES, INC.
ENGINEERS AND SURVEYORS
40W201 Wilson Road, Suite D
Hampshire, Illinois 60140
Ph.: 630-587-0170 • Fax: 630-587-0175

The Reserve at Hudson Crossing - Roadway Improvements
Grading Plan and Profile
Harrison Street Sta 10+00 to Sta 14+50
Oswego, Kendall County, Illinois

Project No.: SH0002
File Name: 29_GRADING_P&P_HAR.dgn
Issue Date: 2/21/2019
Scale: HORIZ: 1" = 20' VERT: 1" = 5'
Sheet Number
29

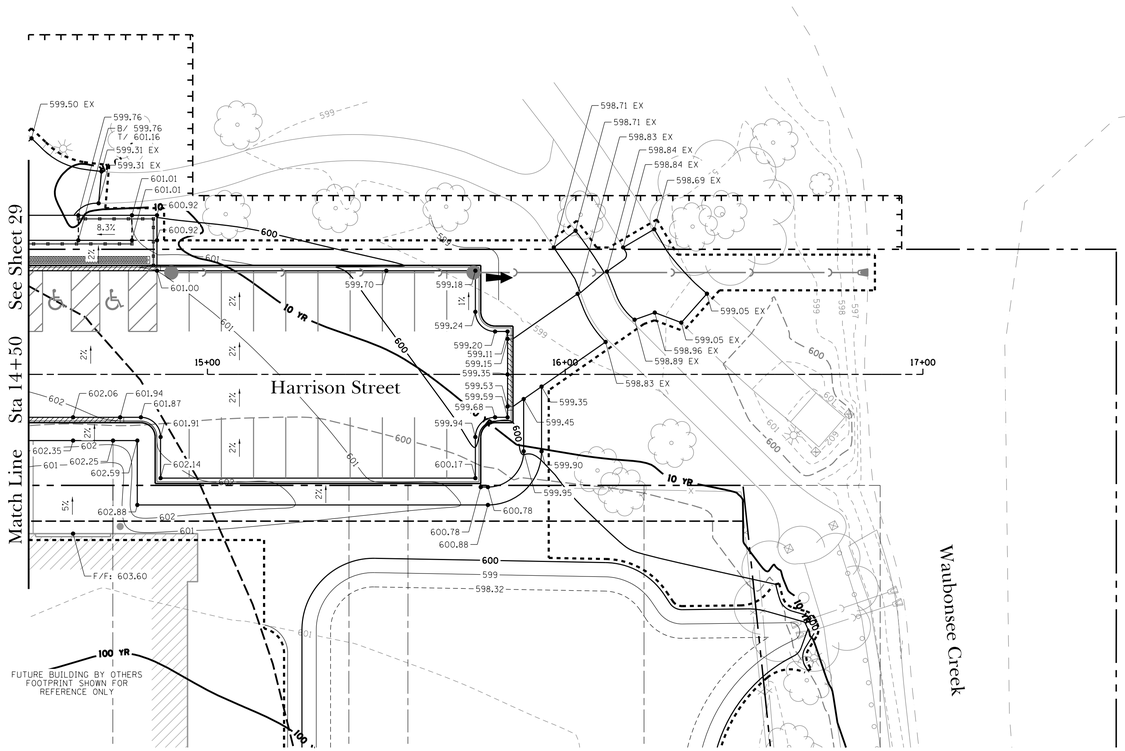

NOTES:

1. CONTRACTOR TO COORDINATE ALL WORK WITHIN HUDSON CROSSING PARK WITH VILLAGE OF OSWEGO AND PARK DISTRICT. PEDESTRIAN ACCESS TO PARK TO REMAIN OPEN AT ALL TIMES DURING CONSTRUCTION.

20 0 20 40
SCALE: 1" = 20' FEET

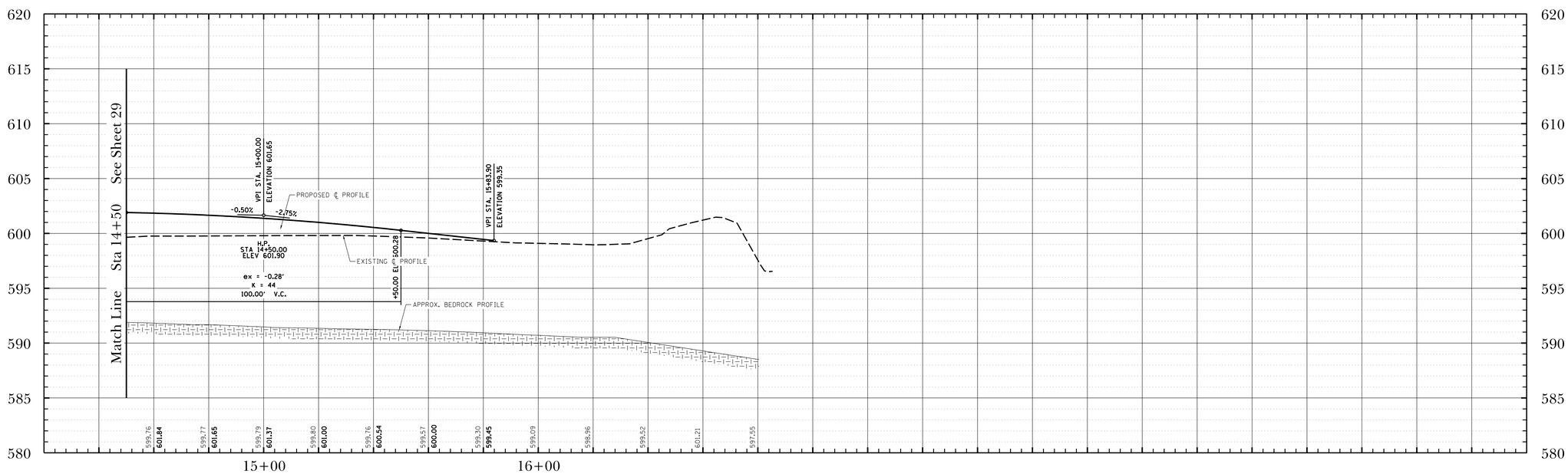

DATE	REVISIONS	ISSUE
2/21/19	ISSUED FOR BIDDING	5.
2/15/19	PER VILLAGE OF OSWEGO, IDOT, FOX METRO	4.
1/11/19	REVISIONS PER VILLAGE OF OSWEGO REVIEW	3.
12/4/18	REVISIONS PER VILLAGE OF OSWEGO REVIEW	2.
11/21/18	REVISIONS PER VILLAGE OF OSWEGO REVIEW	1.

PROJECT STAFF
PROJECT MANAGER:
ENGINEER:
ENGINEER:
ENGINEER:
TECHNICIAN:
TECHNICIAN:

TROTTER ASSOCIATES, INC.
ENGINEERS AND SURVEYORS
400 W. Veterans Roadd, Suite D
Naperville, Illinois 60563
Ph. 630-587-0170 • Fax 630-587-0175

The Reserve at Hudson Crossing - Roadway Improvements
Grading Plan and Profile
Harrison Street Sta 14+50 to Sta 17+00
Oswego, Kendall County, Illinois

Project No.: SH0002
File Name: 30_GRADING_P&P_HAR.dgn
Issue Date: 2/21/2019
Scale: HORIZ: 1" = 20' VERT: 1" = 5'
Sheet Number
30

DATE	REVISIONS	ISSUE
2/21/19	ISSUED FOR BIDDING	5.
2/15/19	PER VILLAGE OF OSWEGO, IDOT, FOX METRO	4.
1/11/19	REVISIONS PER VILLAGE OF OSWEGO REVIEW	3.
12/4/18	REVISIONS PER VILLAGE OF OSWEGO REVIEW	2.
11/21/18	REVISIONS PER VILLAGE OF OSWEGO REVIEW	1.

PROJECT STAFF
PROJECT MANAGER:
ENGINEER:
ENGINEER:
ENGINEER:
TECHNICIAN:
TECHNICIAN:

TROTTER ASSOCIATES, INC.
ENGINEERS AND SURVEYORS
409/201 Veterans Boulevard, Suite D
Romeoville, Illinois 60446
Ph. 630-587-0170 • Fax 630-587-0175

The Reserve at Hudson Crossing - Roadway Improvements
Grading Plan and Profile
Adams Street Sta 20+00 to Sta 24+50
Oswego, Kendall County, Illinois

Project No.: SH0002
File Name: 31_GRADING_P&P_ADAMS.dgn
Issue Date: 2/21/2019
Scale: HORIZ: 1" = 20' VERT: 1" = 5'
Sheet Number
31

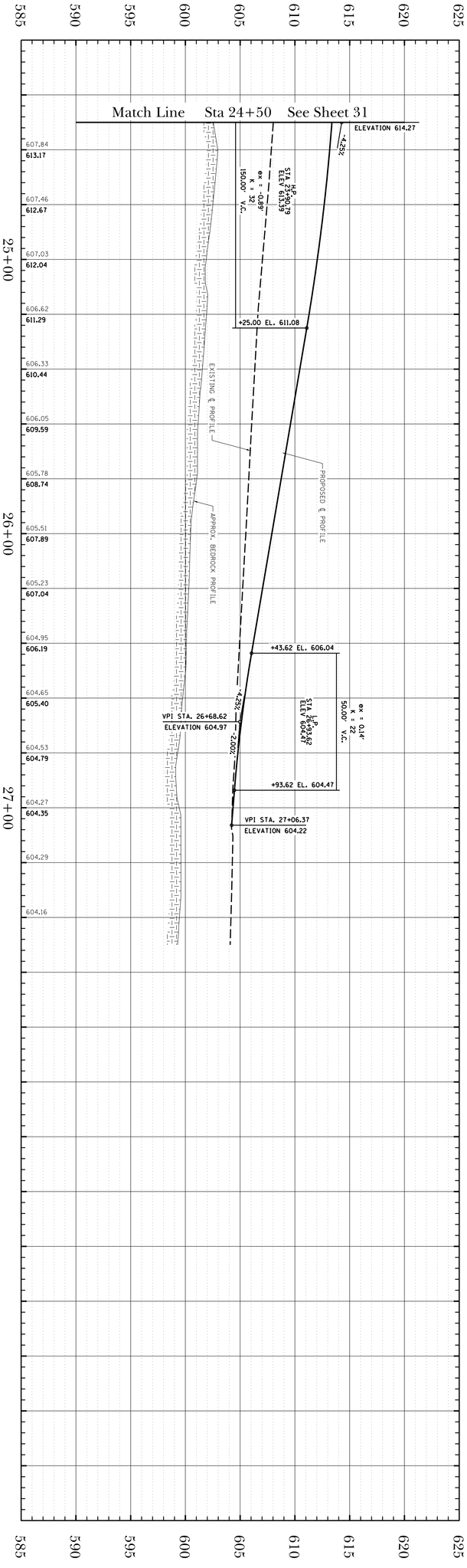

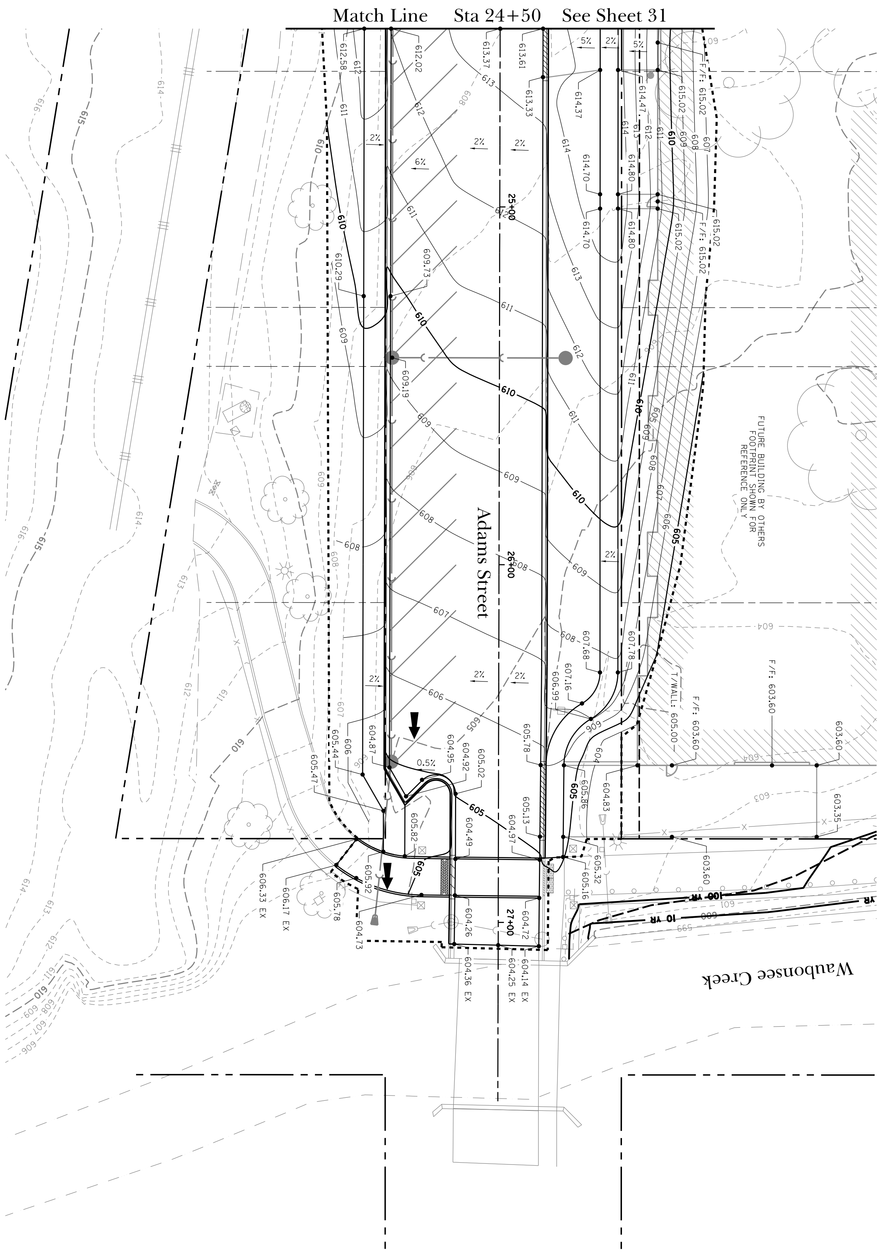

The Reserve at Hudson Crossing - Roadway Improvements

Grading Plan and Profile
Adams Street Sta 24+50 to Sta 27+50

Oswego, Kendall County, Illinois

TROTTER and ASSOCIATES, INC.
ENGINEERS AND SURVEYORS
40W201 Wasco Road, Suite D
St. Charles, IL 60175
Ph.: 630-587-0470 • Fax: 630-587-0475

PROJECT STAFF	ISSUE	REVISIONS	DATE
PROJECT MANAGER:			
ENGINEER:			
ENGINEER:			
ENGINEER:	5.	ISSUED FOR BIDDING	2/21/19
TECHNICIAN:	4.	PER VILLAGE OF OSWEGO, IDOT, FOX METRO	2/15/19
TECHNICIAN:	3.	REVISIONS PER VILLAGE OF OSWEGO REVIEW	1/11/19
	2.	REVISIONS PER VILLAGE OF OSWEGO REVIEW	12/4/18
	1.	REVISIONS PER VILLAGE OF OSWEGO REVIEW	11/21/18

Project No.: SH0002
File Name: 32_GRADING_P&P_ADAMS.dgn
Issue Date: 02/21/2019
Scale: HORIZ 1" = 20' VERT 1" = 5'
Sheet Number 32

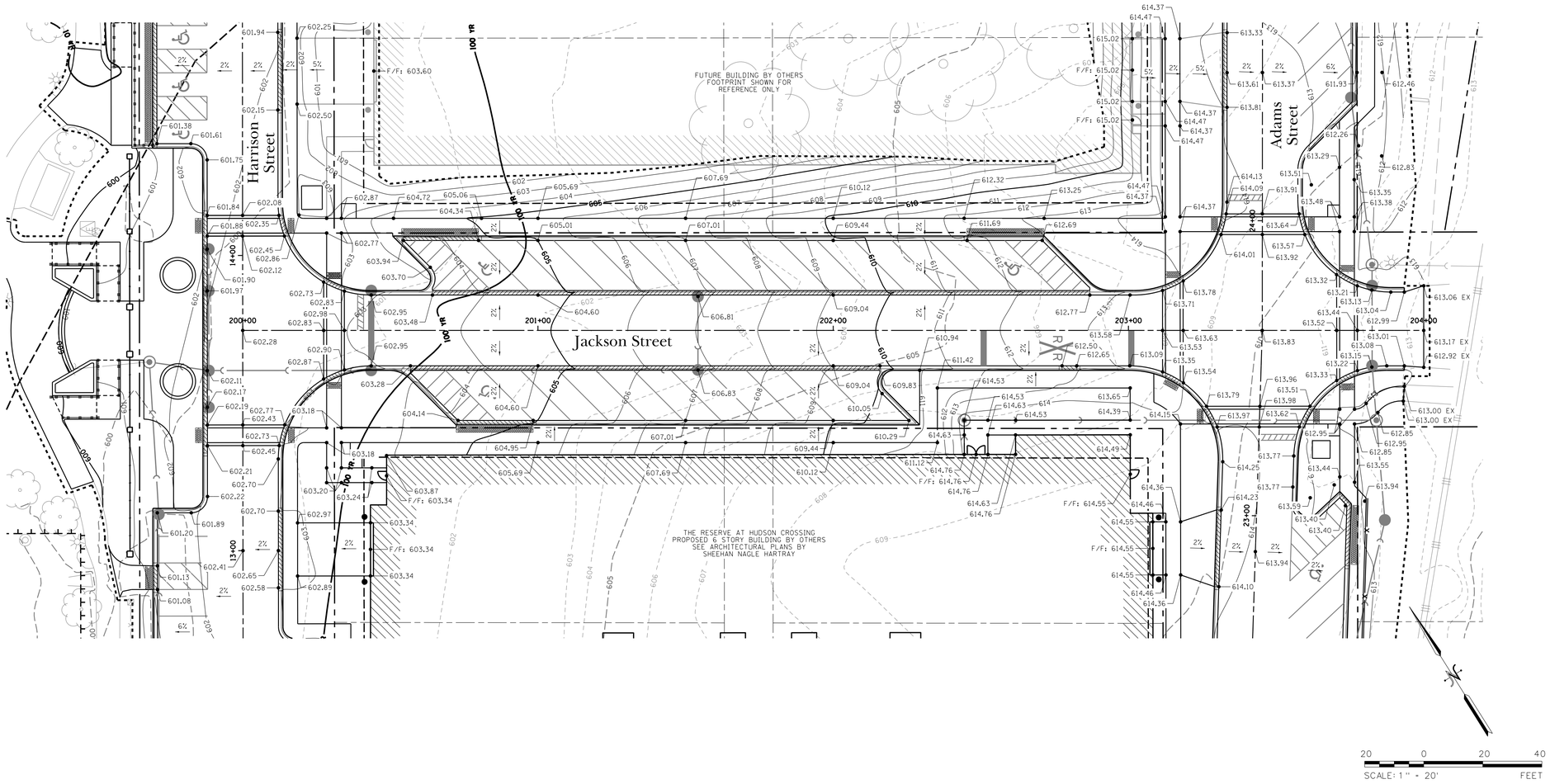

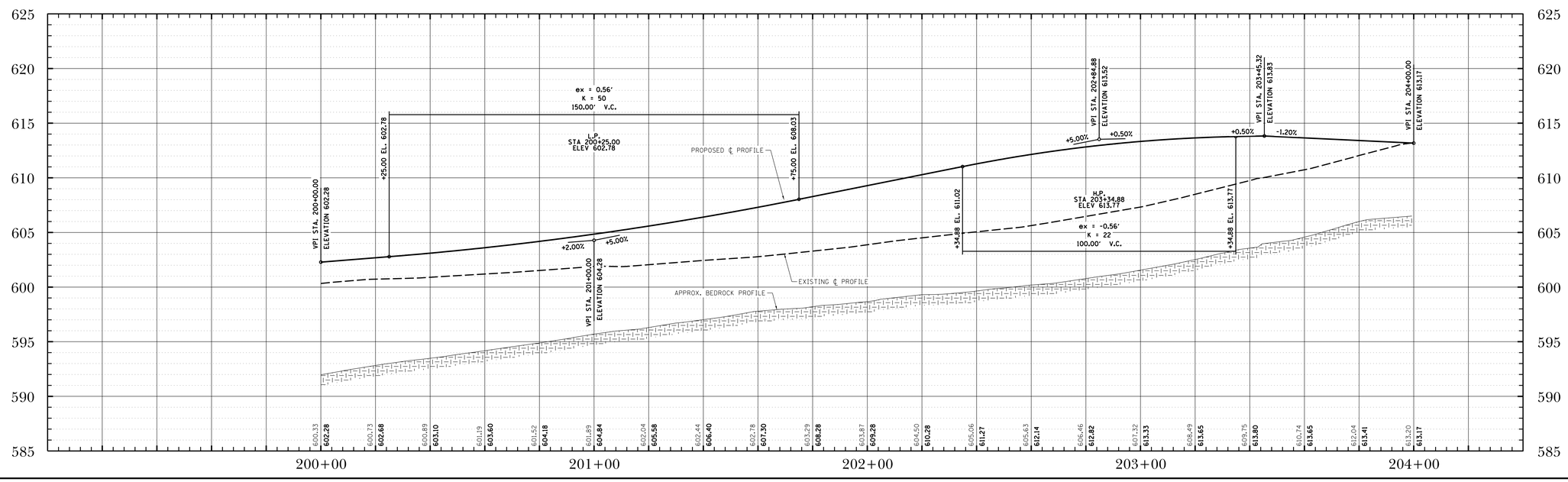

DATE	REVISIONS	ISSUE
2/21/19	ISSUED FOR BIDDING	5.
2/15/19	PER VILLAGE OF OSWEGO, IDOT, FOX METRO	4.
1/11/19	REVISIONS PER VILLAGE OF OSWEGO REVIEW	3.
12/4/18	REVISIONS PER VILLAGE OF OSWEGO REVIEW	2.
11/21/18	REVISIONS PER VILLAGE OF OSWEGO REVIEW	1.

PROJECT STAFF
PROJECT MANAGER:
ENGINEER:
ENGINEER:
ENGINEER:
TECHNICIAN:
TECHNICIAN:

TROTTER ASSOCIATES, INC.
ENGINEERS AND SURVEYORS
40W201 Wilson Road, Suite D
St. Charles, Illinois 60175
Ph. 630-587-0170 • Fax: 630-587-0175

The Reserve at Hudson Crossing - Roadway Improvements
Grading Plan and Profile
Jackson Street Sta 200+00 to Sta 203+45.32
Oswego, Kendall County, Illinois

Project No.: SH0002
File Name: 33_GRADING_P&P_JACK.dgn
Issue Date: 2/21/2019
Scale: HORIZ: 1" = 20' VERT: 1" = 5'
Sheet Number
33

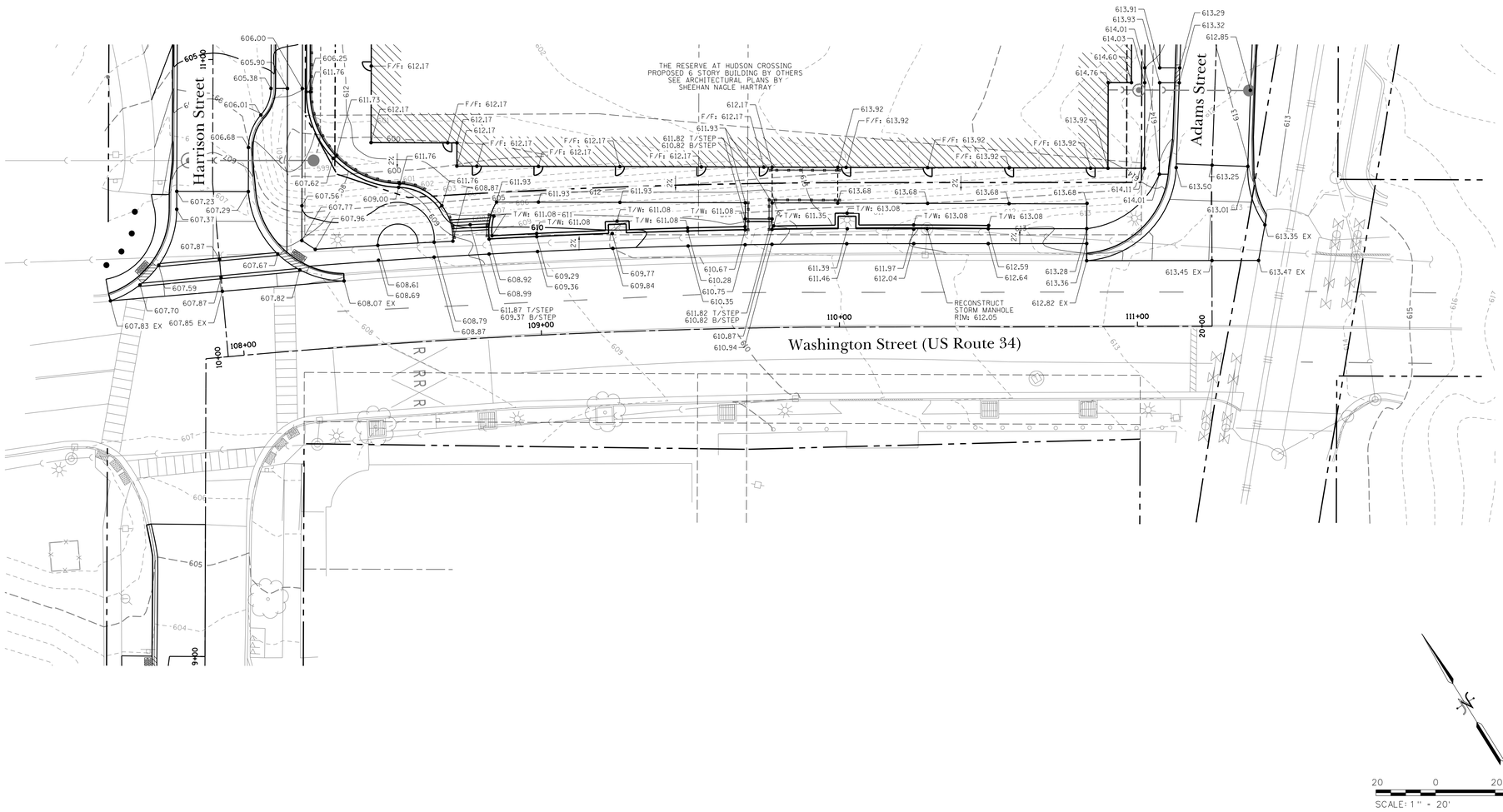

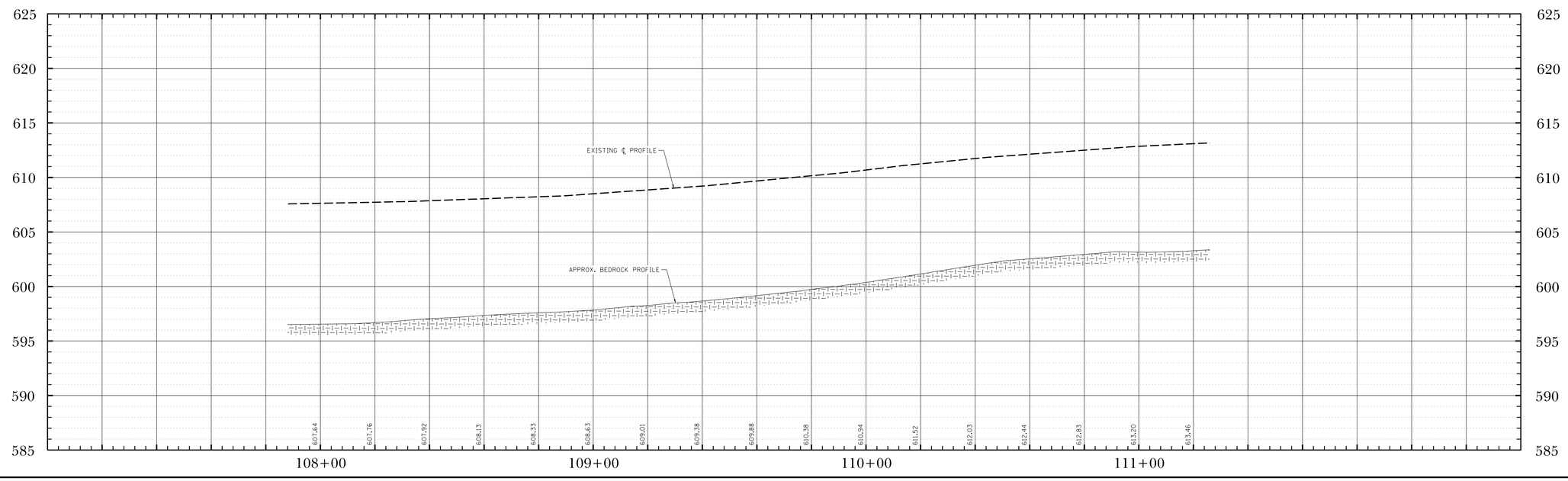

DATE	REVISIONS	ISSUE
2/21/19	ISSUED FOR BIDDING	5.
2/15/19	PER VILLAGE OF OSWEGO, IDOT, FOX METRO	4.
1/11/19	REVISIONS PER VILLAGE OF OSWEGO REVIEW	3.
12/4/18	REVISIONS PER VILLAGE OF OSWEGO REVIEW	2.
11/21/18	REVISIONS PER VILLAGE OF OSWEGO REVIEW	1.

PROJECT STAFF
PROJECT MANAGER:
ENGINEER:
ENGINEER:
ENGINEER:
TECHNICIAN:
TECHNICIAN:

TROTTER ASSOCIATES, INC.
ENGINEERS AND SURVEYORS
400 W. Veterans Road, Suite D
Naperville, Illinois 60563
Ph. 630-587-0170 • Fax 630-587-0175

The Reserve at Hudson Crossing - Roadway Improvements
Grading Plan and Profile
Washington Street Sta 107+94.64 to Sta 111+25.04
Oswego, Kendall County, Illinois

Project No.: SH0002
File Name: 34_GRADING_P&P_WASH.dgn
Issue Date: 2/21/2019
Scale: HORIZ: 1" = 20' VERT: 1" = 5'
Sheet Number
34

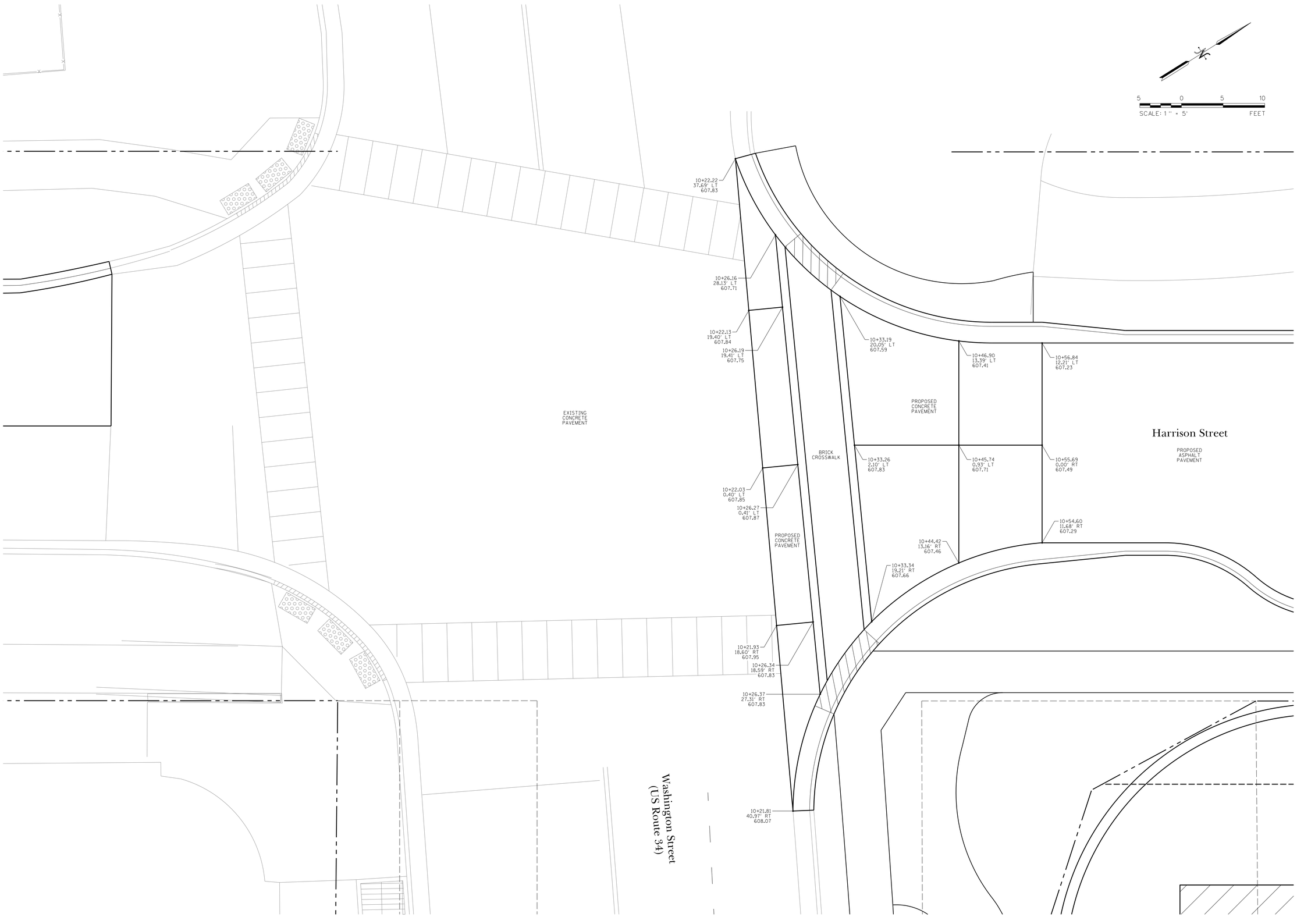

DATE	REVISIONS	ISSUE
2/21/19	ISSUED FOR BIDDING	5.
2/15/19	PER VILLAGE OF OSWEGO, IDOT, FOX METRO	4.
1/11/19	REVISIONS PER VILLAGE OF OSWEGO REVIEW	3.
12/4/18	REVISIONS PER VILLAGE OF OSWEGO REVIEW	2.
11/21/18	REVISIONS PER VILLAGE OF OSWEGO REVIEW	1.

PROJECT STAFF

PROJECT MANAGER:
ENGINEER:
ENGINEER:
ENGINEER:
TECHNICIAN:
TECHNICIAN:

TROTTER
ASSOCIATES, INC.
ENGINEERS AND SURVEYORS
400 W. Velasco Roadt, Suite D
Oswego, Illinois 60543
Ph. 630-587-0170 • Fax 630-587-0175

The Reserve at Hudson Crossing - Roadway Improvements
Intersection Plan
Harrison Street and Washington Street
Oswego, Kendall County, Illinois

Project No.: SH0002
File Name: 35_INTERSECTION_HAR.dgn
Issue Date: 2/21/2019
Scale: 1" = 5'
Sheet Number
35

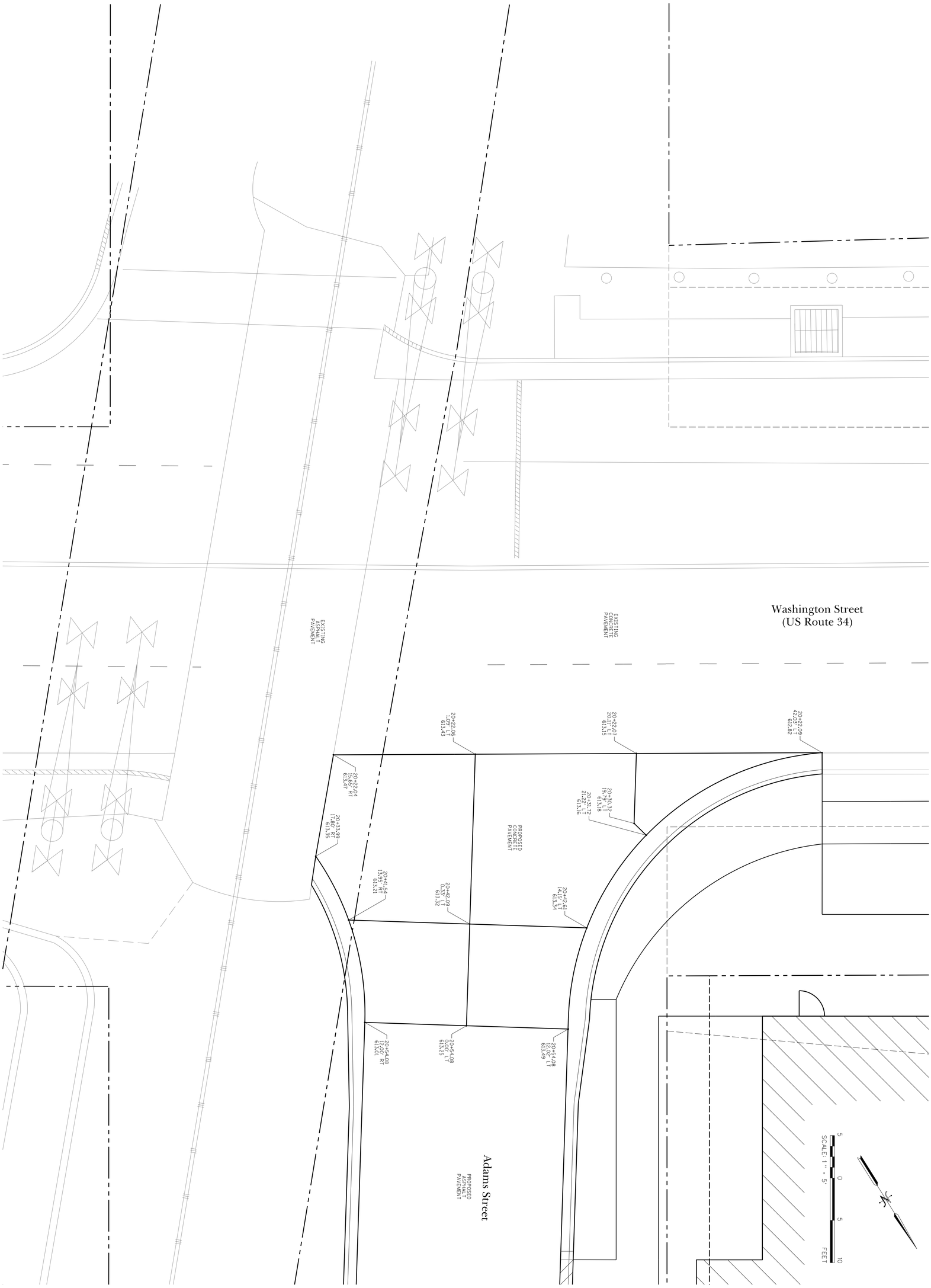

The Reserve at Hudson Crossing - Roadway Improvements

Intersection Plan
Adams Street and Washington Street

Oswego, Kendall County, Illinois

TROTTER and ASSOCIATES, INC.
ENGINEERS AND SURVEYORS
40W201 Wasco Road, Suite D
St. Charles, IL 60175
Ph.: 630-587-0470 • Fax: 630-587-0475

PROJECT STAFF	ISSUE	REVISIONS	DATE
PROJECT MANAGER:			
ENGINEER:			
ENGINEER:			
ENGINEER:	5.	ISSUED FOR BIDDING	2/21/19
TECHNICIAN:	4.	PER VILLAGE OF OSWEGO, IDOT, FOX METRO	2/15/19
TECHNICIAN:	3.	REVISIONS PER VILLAGE OF OSWEGO REVIEW	1/11/19
	2.	REVISIONS PER VILLAGE OF OSWEGO REVIEW	12/4/18
	1.	REVISIONS PER VILLAGE OF OSWEGO REVIEW	11/21/18

Project No.: SH0002
File Name: 36_INTERSECTION_ADAMS.dgn
Issue Date: 2/21/2019
Scale: 1" = 5'
Sheet Number
36

FILL W/IN FLOODPLAIN
0 TO 10 YEAR = 0 CY
10 TO 100 YEAR = 1,092 CY

COMPENSATORY STORAGE VOLUME REQUIRED
0 TO 10 YEAR = 0 CY
10 TO 100 YEAR = 1,637 CY

COMPENSATORY STORAGE VOLUME PROVIDED
0 TO 10 YEAR = 0 CY
10 TO 100 YEAR = 1,639 CY

COMPENSATORY STORAGE VOLUME CALCULATION

ELEVATION	DEPTH	AREA (SQ FT)	AVG AREA (SQ FT)	INCREMENTAL VOLUME (CU FT)	CUMULATIVE VOLUME (CU FT)	(CU YD)
598.32		13,239				0.00
	0.68		14,229	9,675	9,675	
599		15,218				358.35
	1.0		16,239	16,239	25,914	
600		17,259				959.77
	1.0		18,339	18,339	44,253	
601		19,419				1639.00

ISSUE	REVISIONS	DATE
5.	ISSUED FOR BIDDING	2/21/19
4.	PER VILLAGE OF OSWEGO, IDOT, FOX METRO	2/15/19
3.	REVISIONS PER VILLAGE OF OSWEGO REVIEW	1/11/19
2.	REVISIONS PER VILLAGE OF OSWEGO REVIEW	12/4/18
1.	REVISIONS PER VILLAGE OF OSWEGO REVIEW	11/21/18

PROJECT STAFF
PROJECT MANAGER:
ENGINEER:
ENGINEER:
ENGINEER:
TECHNICIAN:
TECHNICIAN:

TROTTER ASSOCIATES, INC.
ENGINEERS AND SURVEYORS
400-201 Veterans Boulevard, Suite D
Romeoville, Illinois 60446
Ph.: 630-587-0170 • Fax: 630-587-0175

The Reserve at Hudson Crossing - Roadway Improvements

Compensatory Storage Grading Plan

Oswego, Kendall County, Illinois

Project No.: SH0002
File Name: 37_COMP_STORAGE.dgn
Issue Date: 2/21/2019
Scale: 1" = 20'
Sheet Number
37

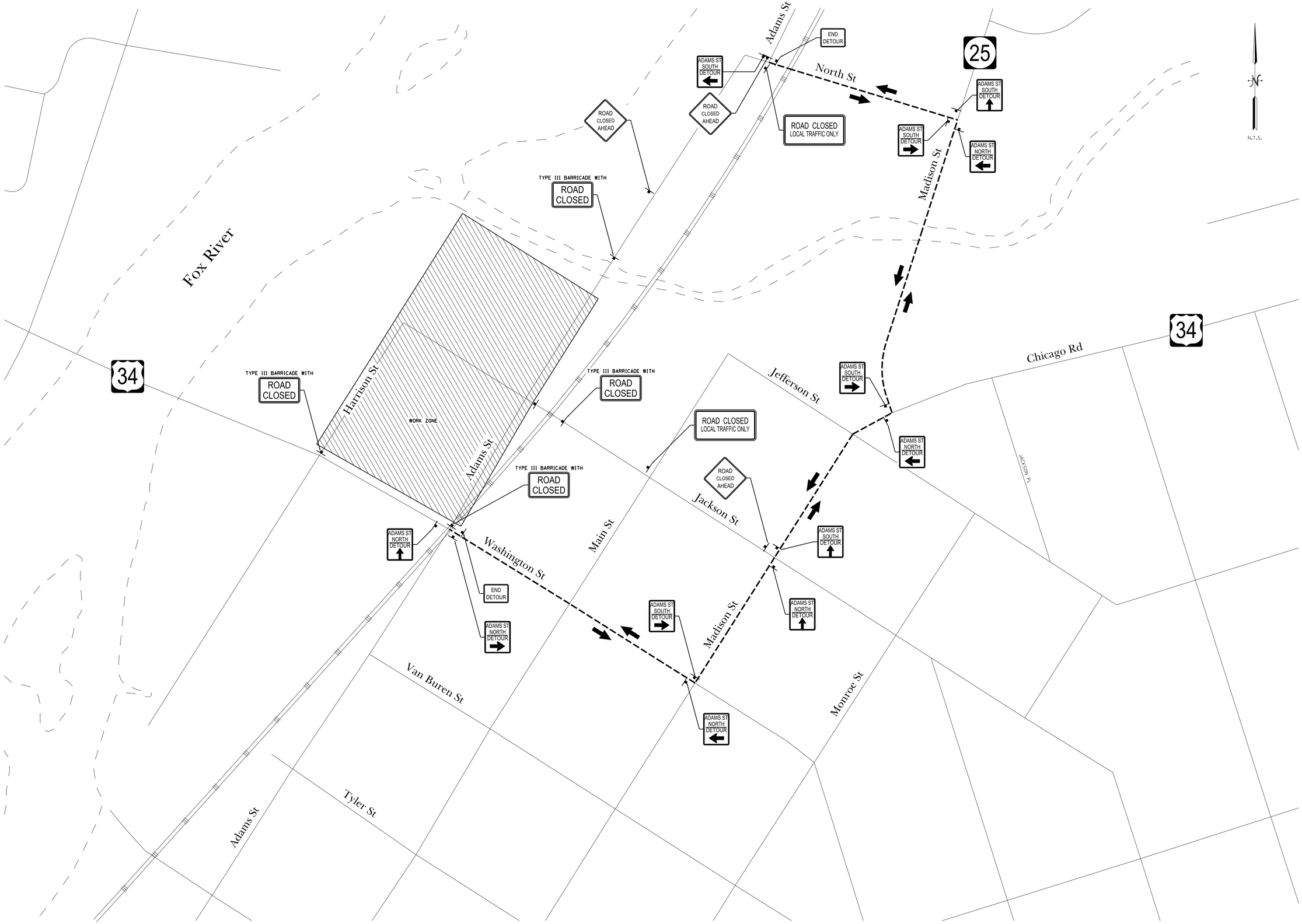

DATE	REVISIONS	ISSUE
2/21/19	ISSUED FOR BIDDING	5.
2/15/19	PER VILLAGE OF OSWEGO, IDOT, FOX METRO	4.
1/1/19	REVISIONS PER VILLAGE OF OSWEGO REVIEW	3.
12/4/18	REVISIONS PER VILLAGE OF OSWEGO REVIEW	2.
11/21/18	REVISIONS PER VILLAGE OF OSWEGO REVIEW	1.

PROJECT STAFF
PROJECT MANAGER:
ENGINEER:
ENGINEER:
ENGINEER:
TECHNICIAN:
TECHNICIAN:

TROTTER ASSOCIATES, INC.
ENGINEERS AND SURVEYORS
409/201 Hobson Roadth, Suite D
Naperville, Illinois 60563
Ph.: 630-587-0170 • Fax: 630-587-0175

The Reserve at Hudson Crossing - Roadway Improvements

Detour Plan

Oswego, Kendall County, Illinois

Project No.: SH0002
File Name: 38.DETOUR.dgn
Issue Date: 2/21/2019
Scale: N.T.S.
Sheet Number
38

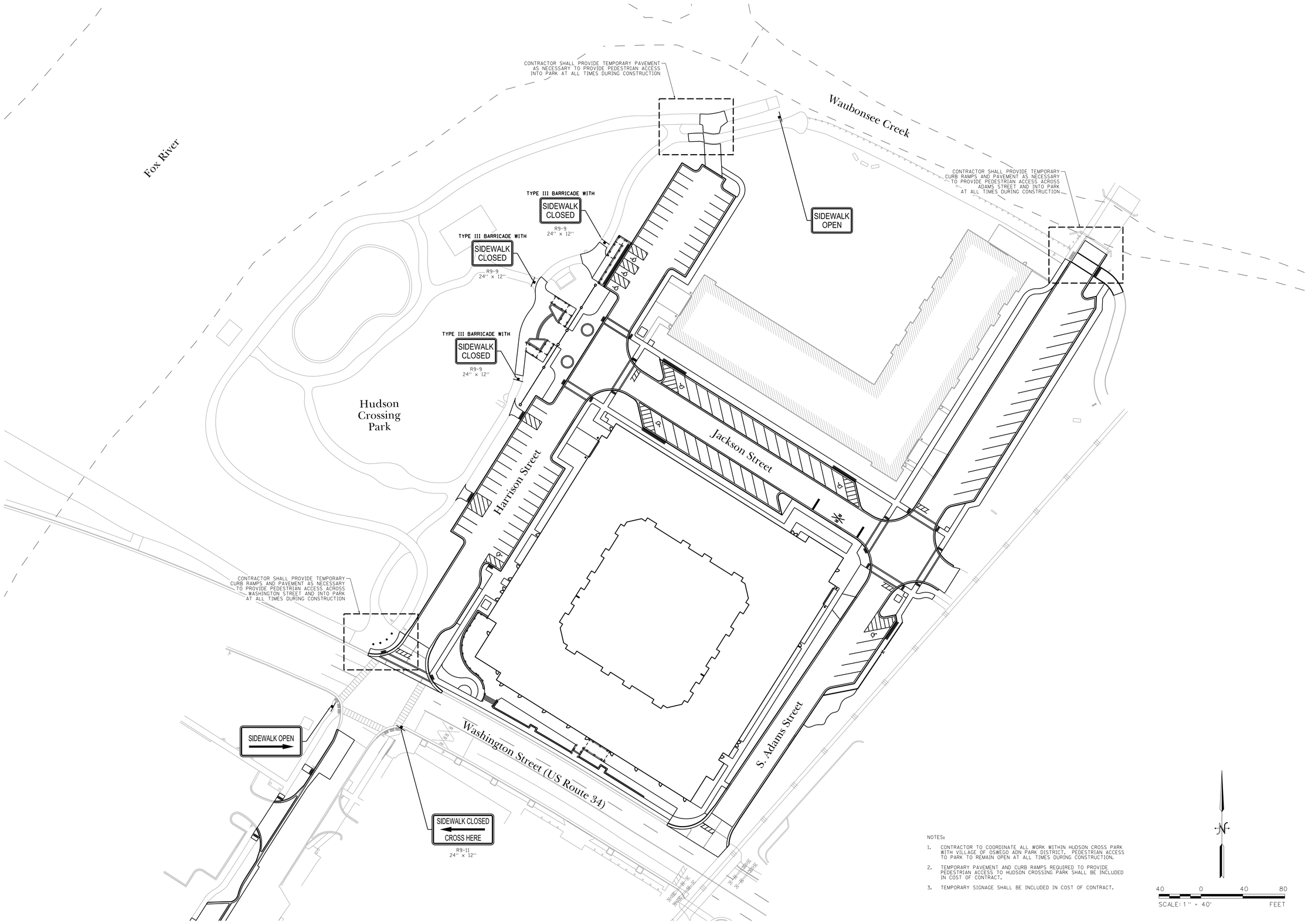

NOTES:

1. CONTRACTOR TO COORDINATE ALL WORK WITHIN HUDSON CROSS PARK WITH VILLAGE OF OSWEGO ADN PARK DISTRICT. PEDESTRIAN ACCESS TO PARK TO REMAIN OPEN AT ALL TIMES DURING CONSTRUCTION.
2. TEMPORARY PAVEMENT AND CURB RAMPS REQUIRED TO PROVIDE PEDESTRIAN ACCESS TO HUDSON CROSSING PARK SHALL BE INCLUDED IN COST OF CONTRACT.
3. TEMPORARY SIGNAGE SHALL BE INCLUDED IN COST OF CONTRACT.

PROJECT STAFF	ISSUE	REVISIONS	DATE
PROJECT MANAGER:			
ENGINEER:			
ENGINEER:			
ENGINEER:	5.	ISSUED FOR BIDDING	2/21/19
TECHNICIAN:	4.	PER VILLAGE OF OSWEGO, IDOT, FOX METRO	2/15/19
TECHNICIAN:	3.	REVISIONS PER VILLAGE OF OSWEGO REVIEW	1/11/19
TECHNICIAN:	2.	REVISIONS PER VILLAGE OF OSWEGO REVIEW	12/4/18
	1.	REVISIONS PER VILLAGE OF OSWEGO REVIEW	11/21/18

TROTTER ASSOCIATES, INC.
ENGINEERS AND SURVEYORS
4109/201 Mason Roadd, Suite D
Oswego, Illinois 60543
Ph. (630-587-0170) • Fax (630-587-0175)

The Reserve at Hudson Crossing - Roadway Improvements

Sidewalk Detour and Signage Plan

Oswego, Kendall County, Illinois

Project No.: SH0002

File Name: 39_SW_DETOUR.dgn

Issue Date: 2/21/2019

Scale: 1" = 40'

Sheet Number

39

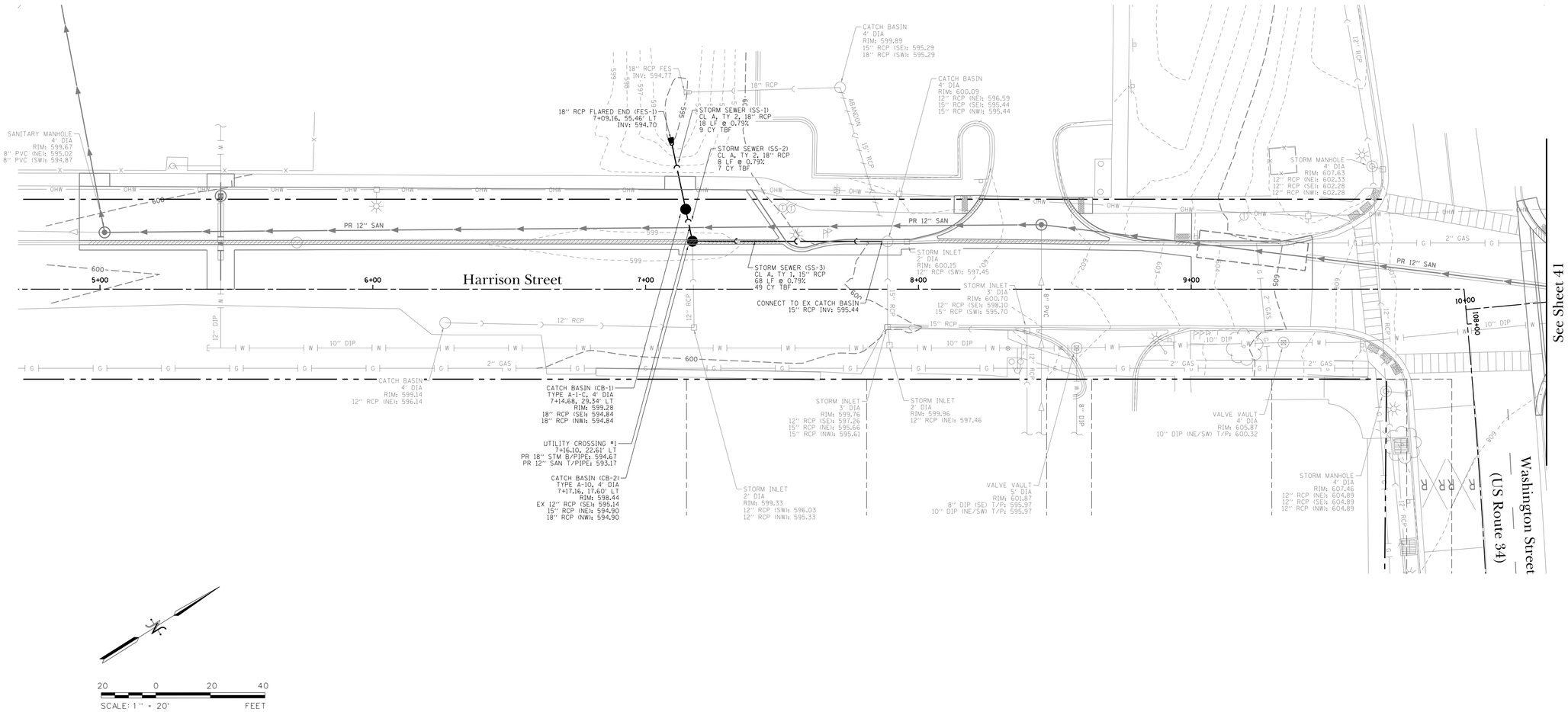

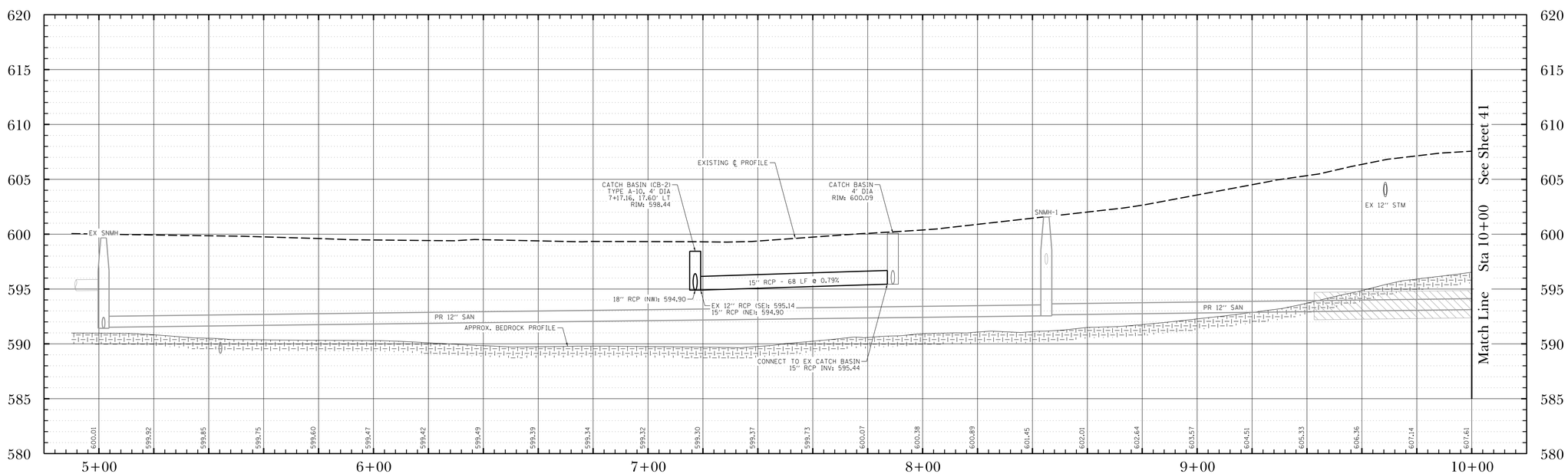

ISSUE	REVISIONS	DATE
	ISSUED FOR BIDDING	2/21/19
5.	PER VILLAGE OF OSWEGO, IDOT, FOX METRO	2/15/19
4.	REVISIONS PER VILLAGE OF OSWEGO REVIEW	1/11/19
3.	REVISIONS PER VILLAGE OF OSWEGO REVIEW	12/4/18
2.	REVISIONS PER VILLAGE OF OSWEGO REVIEW	11/21/18
1.		

PROJECT STAFF
PROJECT MANAGER:
ENGINEER:
ENGINEER:
ENGINEER:
TECHNICIAN:
TECHNICIAN:

TROTTER ASSOCIATES, INC.
ENGINEERS AND SURVEYORS
40W201 Wilson Roadd, Suite D
St. Charles, Illinois 60175
Ph: 630-587-0170 • Fax: 630-587-0175

The Reserve at Hudson Crossing - Roadway Improvements
Drainage Plan and Profile
Harrison Street Sta 5+00 to Sta 10+00
Oswego, Kendall County, Illinois

Project No.: SH0002
File Name: 40_DRAIN_P&P_HAR.dgn
Issue Date: 2/21/2019
Scale: HORIZ: 1" = 20' VERT: 1" = 5'
Sheet Number
40

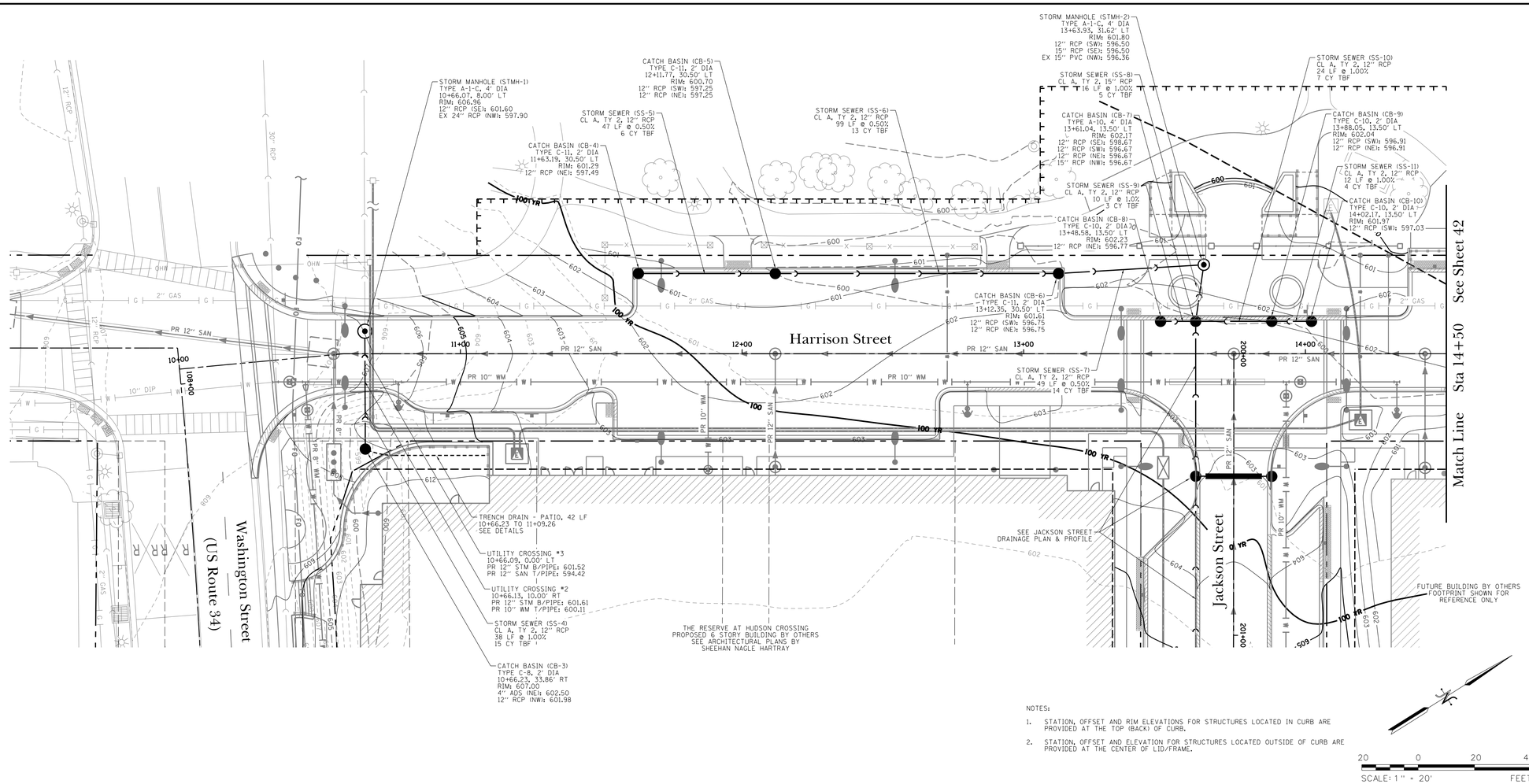

NOTES:

1. STATION, OFFSET AND RIM ELEVATIONS FOR STRUCTURES LOCATED IN CURB ARE PROVIDED AT THE TOP (BACK) OF CURB.
2. STATION, OFFSET AND ELEVATION FOR STRUCTURES LOCATED OUTSIDE OF CURB ARE PROVIDED AT THE CENTER OF LID/FRAME.

20 0 20 40
SCALE: 1" = 20' FEET

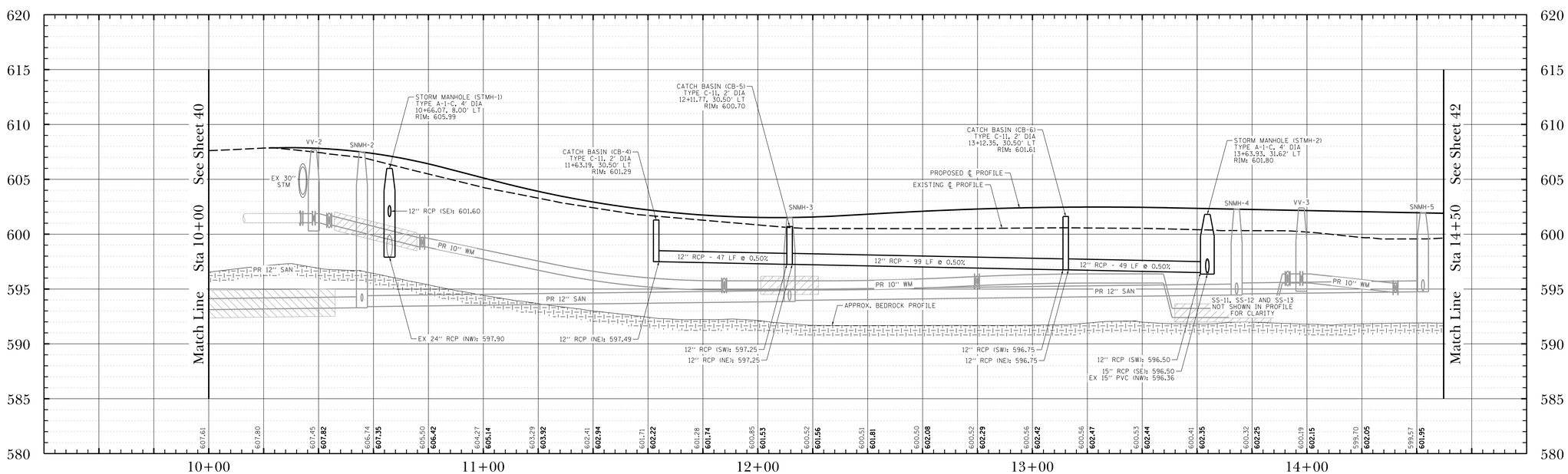

DATE	REVISIONS	ISSUE
2/21/19	ISSUED FOR BIDDING	5.
2/15/19	PER VILLAGE OF OSWEGO, IDOT, FOX METRO	4.
1/11/19	REVISIONS PER VILLAGE OF OSWEGO REVIEW	3.
12/4/18	REVISIONS PER VILLAGE OF OSWEGO REVIEW	2.
11/21/18	REVISIONS PER VILLAGE OF OSWEGO REVIEW	1.

PROJECT STAFF
PROJECT MANAGER:
ENGINEER:
ENGINEER:
ENGINEER:
TECHNICIAN:
TECHNICIAN:

TROTTER ASSOCIATES, INC.
ENGINEERS AND SURVEYORS
409 W. Veterans Road, Suite D
Plainfield, Illinois 60544
Ph. 630-587-0170 • Fax 630-587-0175

The Reserve at Hudson Crossing - Roadway Improvements
Drainage Plan and Profile
Harrison Street Sta 10+00 to Sta 14+50
Oswego, Kendall County, Illinois

Project No.: SH0002
File Name: 41_DRAIN_P&P_HAR.dgn
Issue Date: 2/21/2019
Scale: HORIZ: 1" = 20' VERT: 1" = 5'
Sheet Number
41

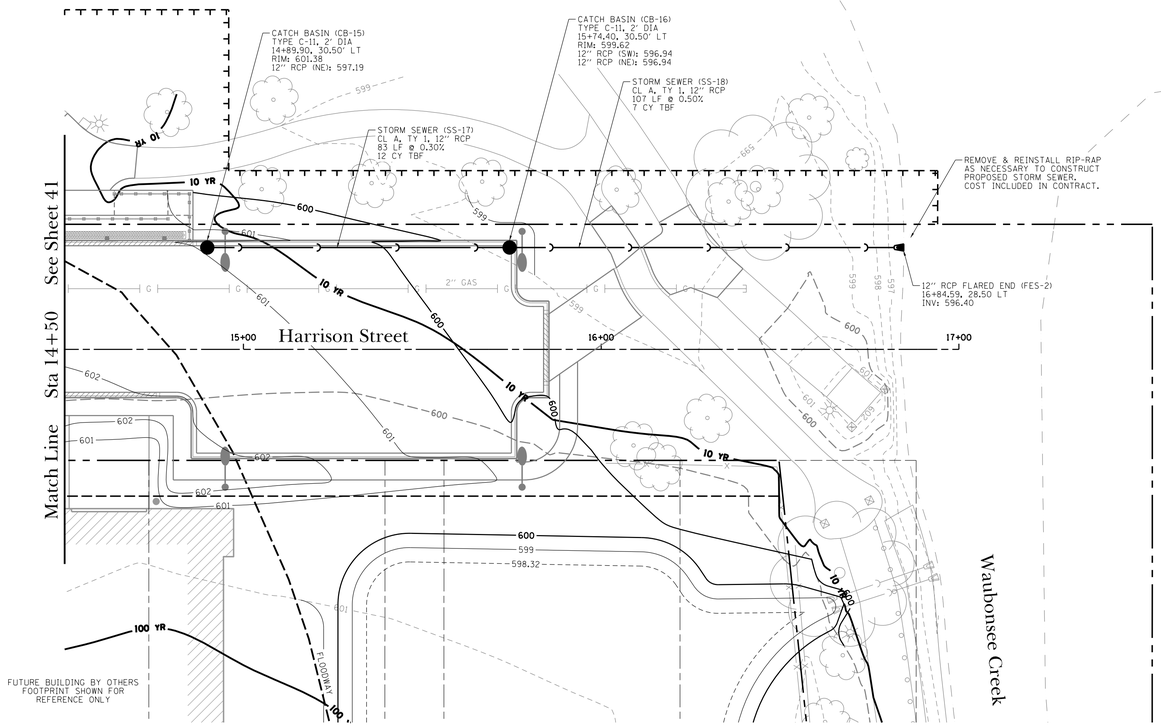

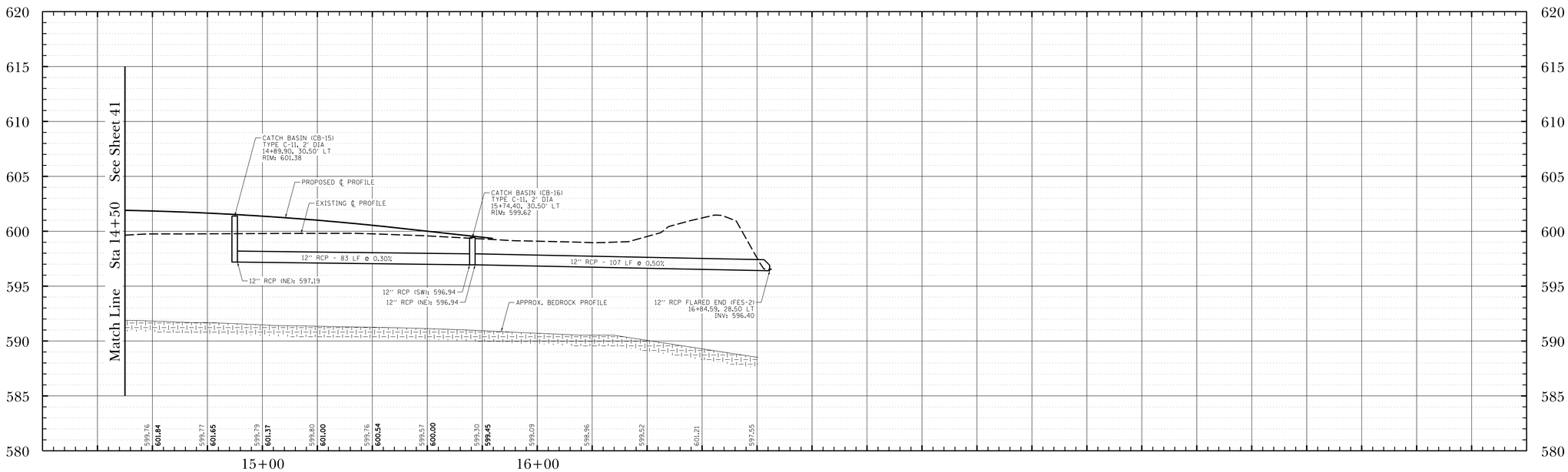

20 0 20 40
SCALE: 1" = 20' FEET

PROJECT STAFF	
PROJECT MANAGER:	
ENGINEER:	
ENGINEER:	
ENGINEER:	
TECHNICIAN:	
TECHNICIAN:	

ISSUE	REVISIONS	DATE
5.	ISSUED FOR BIDDING	2/21/19
4.	PER VILLAGE OF OSWEGO, IDOT, FOX METRO	2/15/19
3.	REVISIONS PER VILLAGE OF OSWEGO REVIEW	1/11/19
2.	REVISIONS PER VILLAGE OF OSWEGO REVIEW	12/4/18
1.	REVISIONS PER VILLAGE OF OSWEGO REVIEW	11/21/18

TROTTER ASSOCIATES, INC.
ENGINEERS AND SURVEYORS
400-20 N. Hobson Road, Suite D
Plainfield, Illinois 60585
Ph: 630-587-0170 • Fax: 630-587-0175

The Reserve at Hudson Crossing - Roadway Improvements
Drainage Plan and Profile
Harrison Street Sta 14+50 to Sta 17+00
Oswego, Kendall County, Illinois

Project No.: SH0002
File Name: 42_DRAIN_P&P_HAR.dgn
Issue Date: 2/21/2019
Scale: HORIZ: 1" = 20' VERT: 1" = 5'
Sheet Number
42

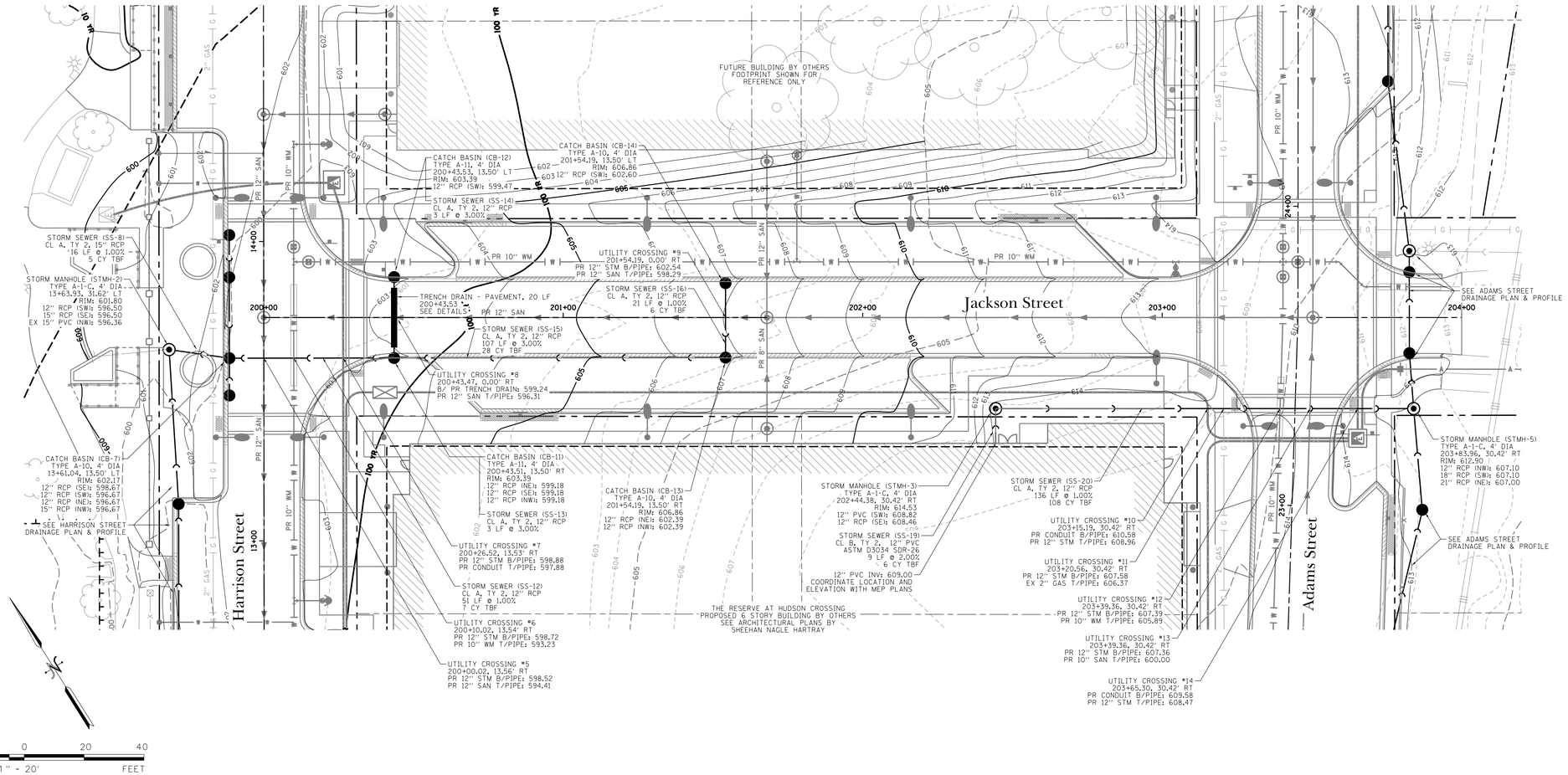

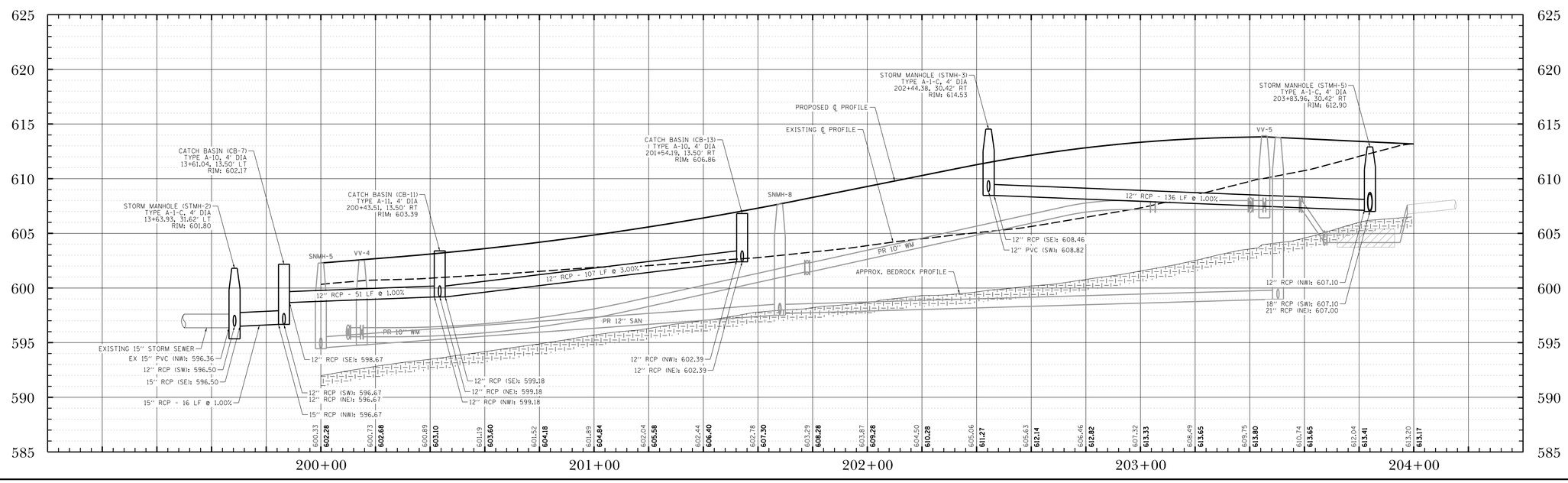

DATE	REVISIONS	ISSUE
2/21/19	ISSUED FOR BIDDING	5.
2/15/19	PER VILLAGE OF OSWEGO, IDOT, FOX METRO	4.
1/11/19	REVISIONS PER VILLAGE OF OSWEGO REVIEW	3.
12/4/18	REVISIONS PER VILLAGE OF OSWEGO REVIEW	2.
11/21/18	REVISIONS PER VILLAGE OF OSWEGO REVIEW	1.

PROJECT STAFF
PROJECT MANAGER:
ENGINEER:
ENGINEER:
ENGINEER:
TECHNICIAN:
TECHNICIAN:

TROTTER ASSOCIATES, INC.
ENGINEERS AND SURVEYORS
409W201 Wilson Road, Suite D
Oswego, Illinois 60543
Ph: 630-587-0170 • Fax: 630-587-0175

The Reserve at Hudson Crossing - Roadway Improvements
Drainage Plan and Profile
Jackson Street Sta 200+00 to Sta 203+45.32
Oswego, Kendall County, Illinois

Project No.: SH0002
File Name: 43_DRAIN_P&P_JACK.dgn
Issue Date: 2/21/2019
Scale: HORIZ: 1" = 20' VERT: 1" = 5'
Sheet Number
43

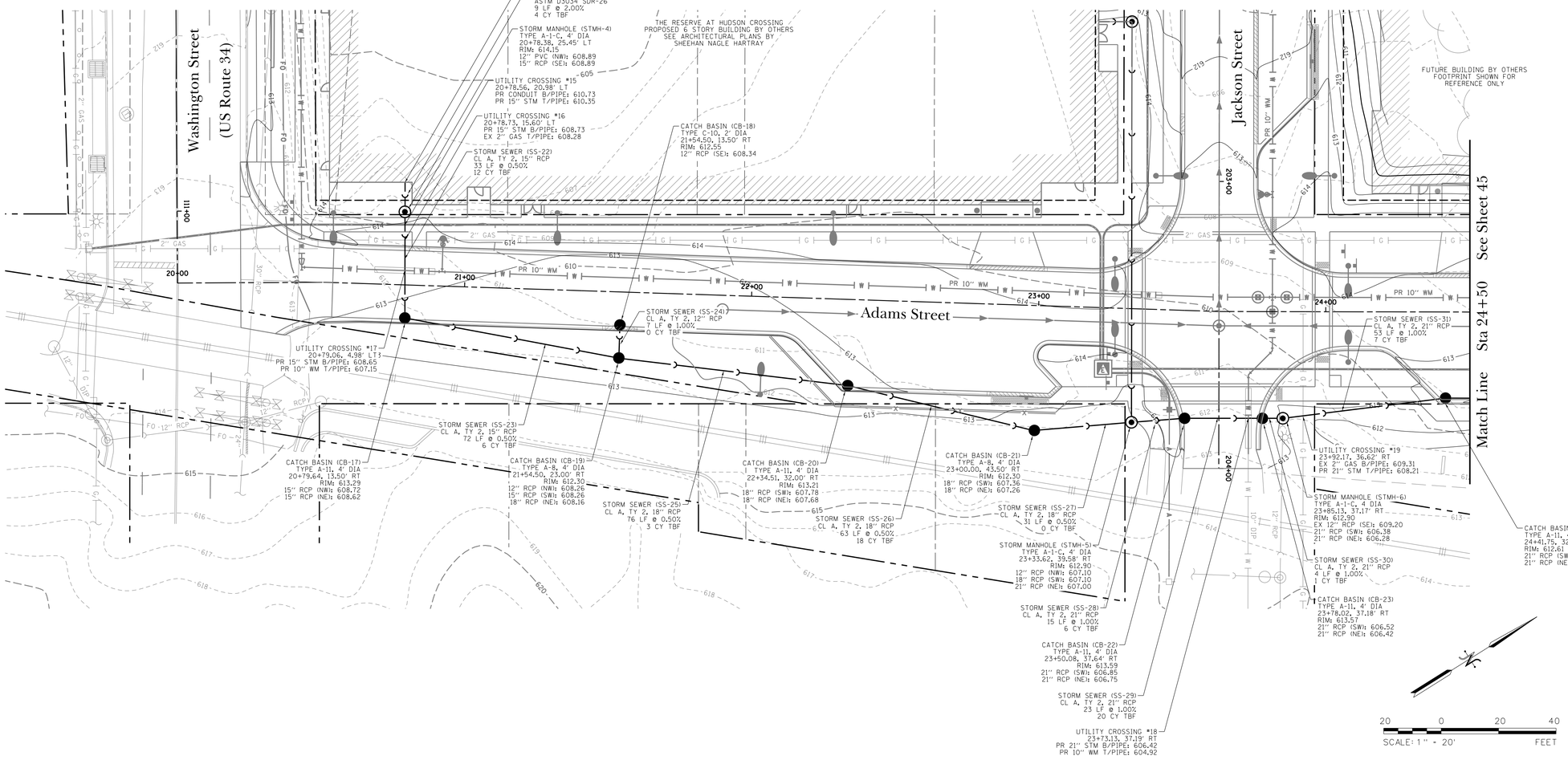

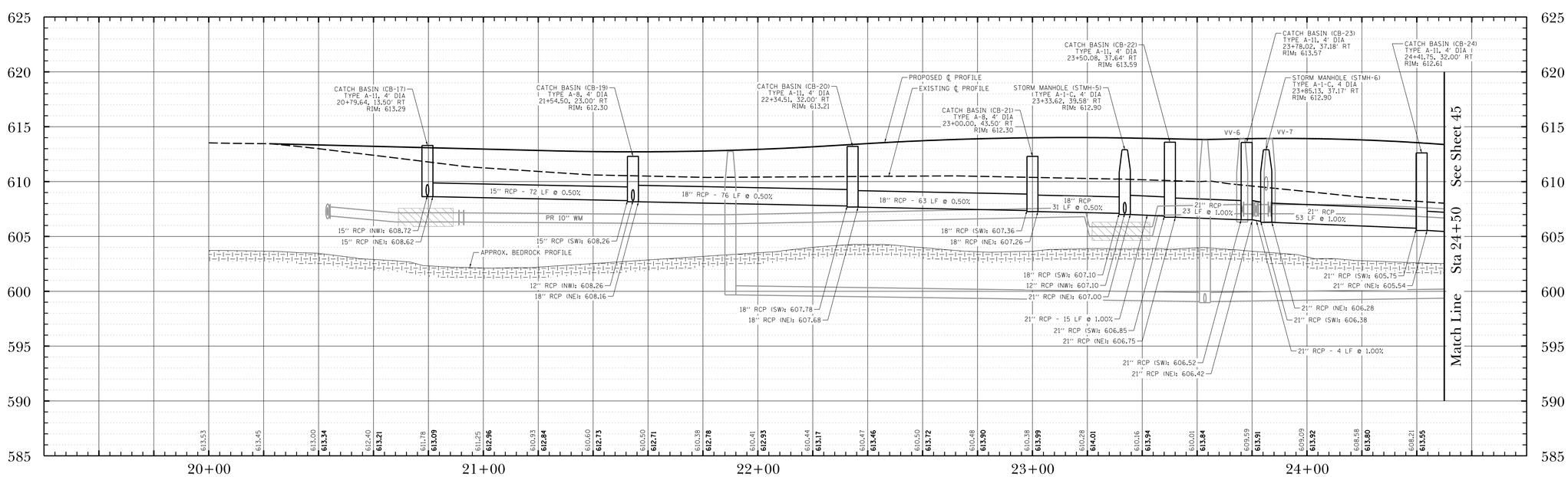

DATE	REVISIONS	ISSUE
2/21/19	ISSUED FOR BIDDING	5.
2/15/19	PER VILLAGE OF OSWEGO, IDOT, FOX METRO	4.
1/11/19	REVISIONS PER VILLAGE OF OSWEGO REVIEW	3.
12/4/18	REVISIONS PER VILLAGE OF OSWEGO REVIEW	2.
11/21/18	REVISIONS PER VILLAGE OF OSWEGO REVIEW	1.

PROJECT STAFF
PROJECT MANAGER:
ENGINEER:
ENGINEER:
ENGINEER:
TECHNICIAN:
TECHNICIAN:
TECHNICIAN:

TROTTER ASSOCIATES, INC.
ENGINEERS AND SURVEYORS
400W201 Wilson Road, Suite D
Oswego, Illinois 60543
Ph: 630-587-0170 • Fax: 630-587-0175

The Reserve at Hudson Crossing - Roadway Improvements
Drainage Plan and Profile
Adams Street Sta 20+00 to Sta 24+50
Oswego, Kendall County, Illinois

Project No.: SH0002
File Name: 44_DRAIN_P&P_ADAMS.dgn
Issue Date: 2/21/2019
Scale: HORIZ: 1" = 20' VERT: 1" = 5'
Sheet Number
44

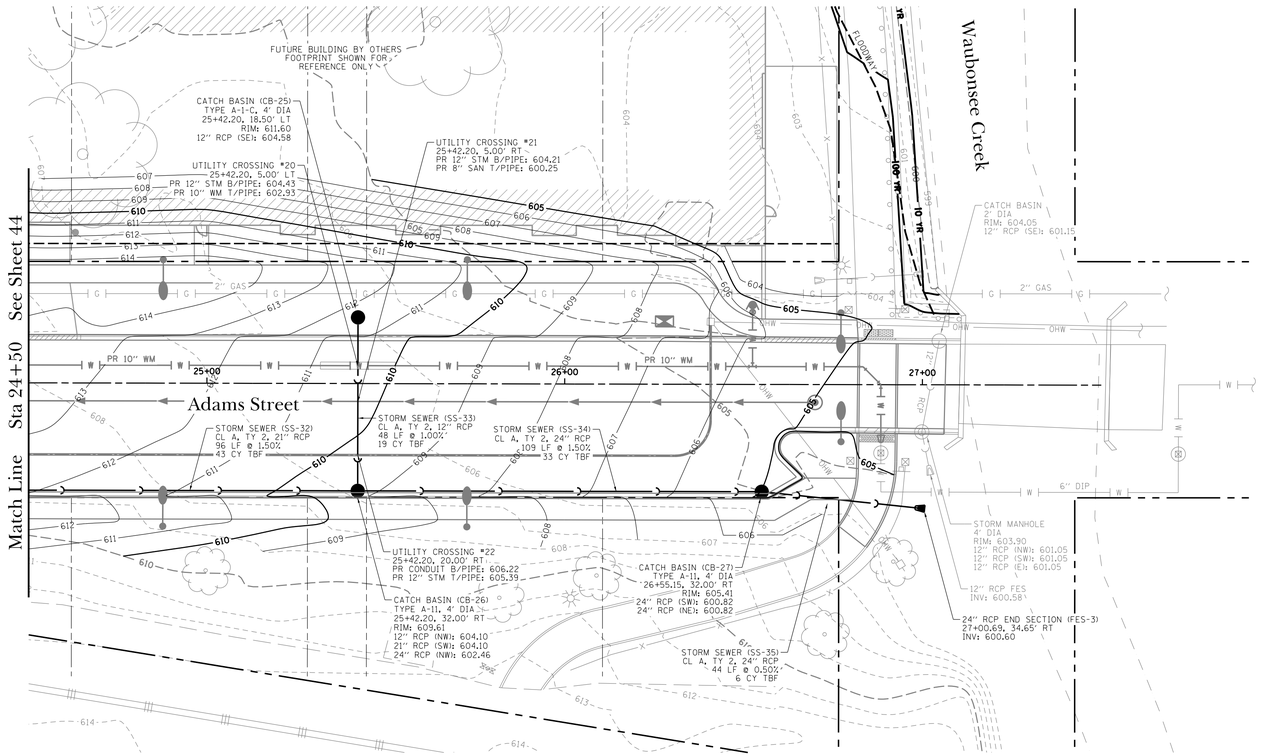

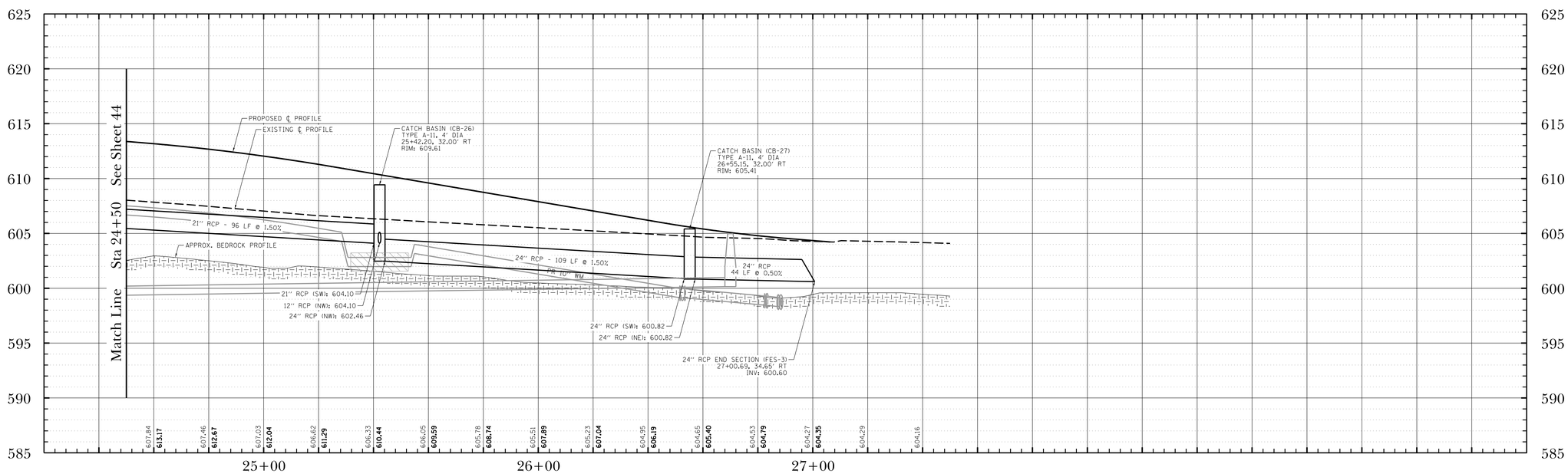

PROJECT STAFF		ISSUE	REVISIONS	DATE
PROJECT MANAGER:				
ENGINEER:				
ENGINEER:				
ENGINEER:		5.	ISSUED FOR BIDDING	2/21/19
TECHNICIAN:		4.	PER VILLAGE OF OSWEGO, IDOT, FOX METRO	2/15/19
TECHNICIAN:		3.	REVISIONS PER VILLAGE OF OSWEGO REVIEW	1/11/19
TECHNICIAN:		2.	REVISIONS PER VILLAGE OF OSWEGO REVIEW	12/4/18
		1.	REVISIONS PER VILLAGE OF OSWEGO REVIEW	11/21/18

TROTTER ASSOCIATES, INC.
ENGINEERS AND SURVEYORS
400-201 Wilson Road, Suite D
Oswego, Illinois 60543
Ph: 630-587-0170 • Fax: 630-587-0175

The Reserve at Hudson Crossing - Roadway Improvements
Drainage Plan and Profile
Adams Street Sta 24+50 to Sta 27+50
Oswego, Kendall County, Illinois

Project No.: SH0002
File Name: 45_DRAIN_P&P_ADAMS.dgn
Issue Date: 2/21/2019
Scale: HORIZ: 1" = 20' VERT: 1" = 5'
Sheet Number
45

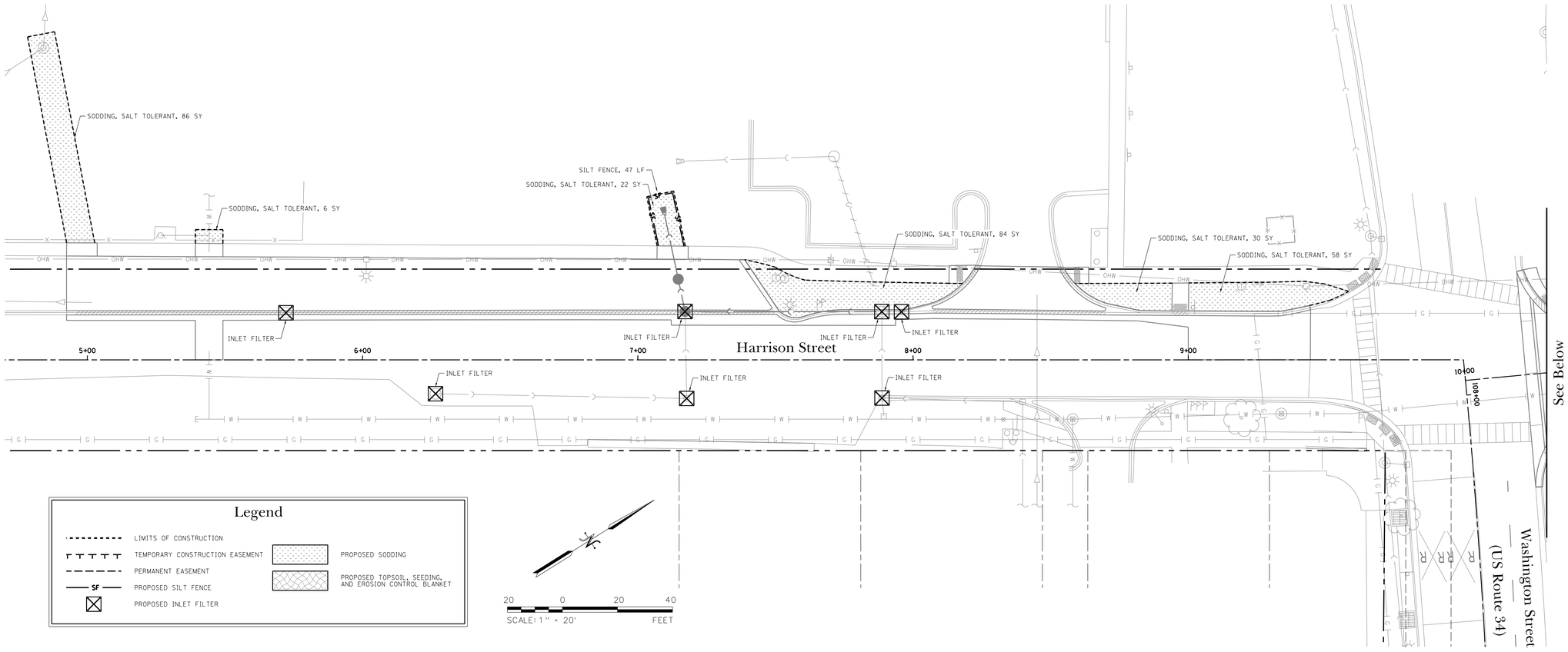

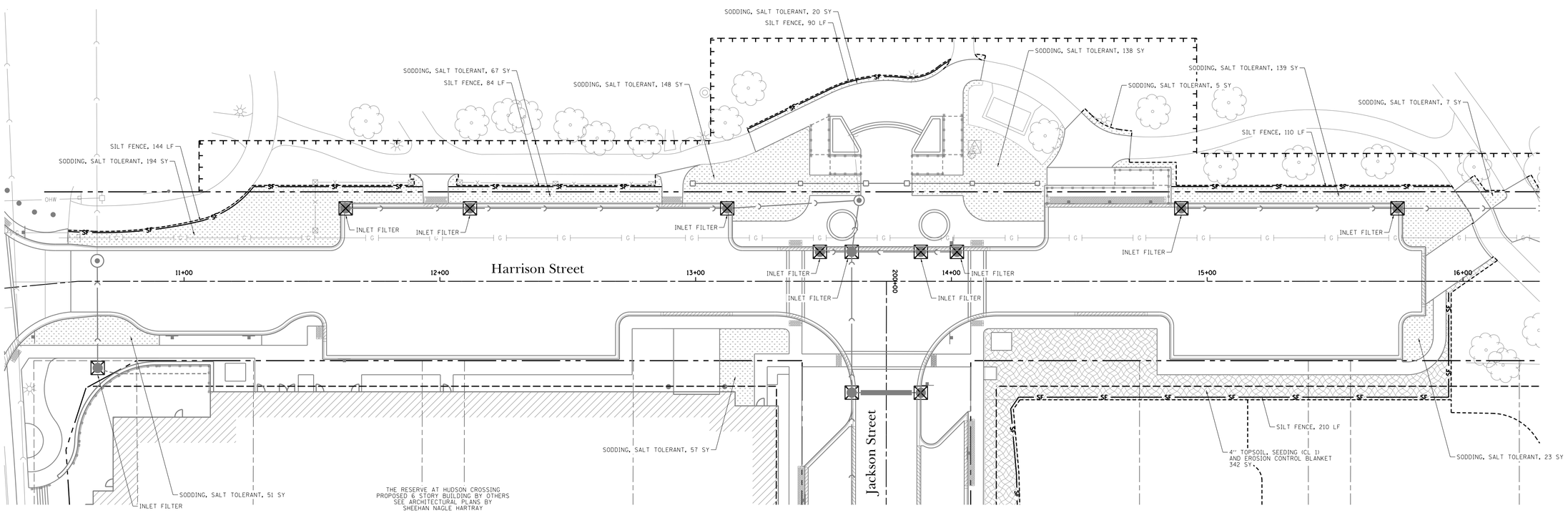

DATE	REVISIONS	ISSUE
2/21/19	ISSUED FOR BIDDING	5.
2/15/19	PER VILLAGE OF OSWEGO, IDOT, FOX METRO	4.
1/11/19	REVISIONS PER VILLAGE OF OSWEGO REVIEW	3.
12/4/18	REVISIONS PER VILLAGE OF OSWEGO REVIEW	2.
11/21/18	REVISIONS PER VILLAGE OF OSWEGO REVIEW	1.

PROJECT STAFF
PROJECT MANAGER:
ENGINEER:
ENGINEER:
ENGINEER:
TECHNICIAN:
TECHNICIAN:

TROTTER ASSOCIATES, INC.
ENGINEERS AND SURVEYORS
400/420 N. Mason Rd.dt, Suite D
Oswego, Illinois 60543
Ph.: 630-587-0170 • Fax: 630-587-0175

The Reserve at Hudson Crossing - Roadway Improvements

Erosion Controon Plan - Harrison Street

Oswego, Kendall County, Illinois

Project No.:	SH0002
File Name:	46_EROS_HAR.dgn
Issue Date:	2/21/2019
Scale:	1" = 20'
Sheet Number	46

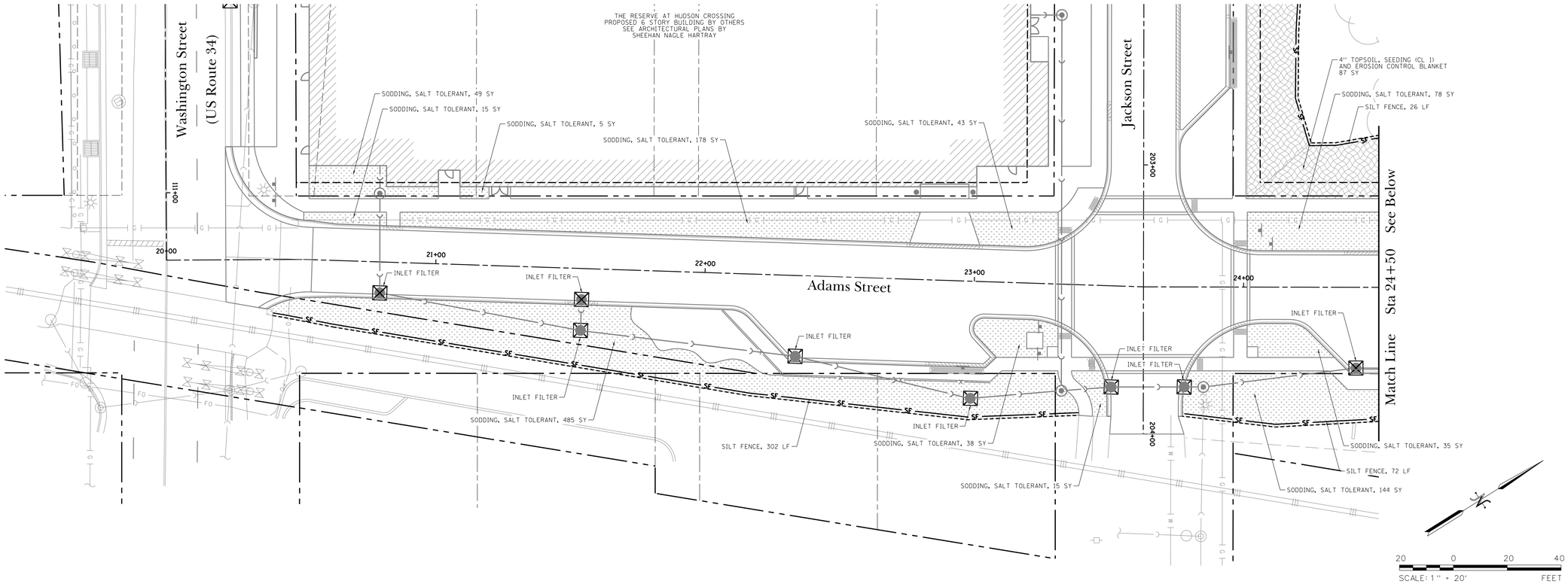

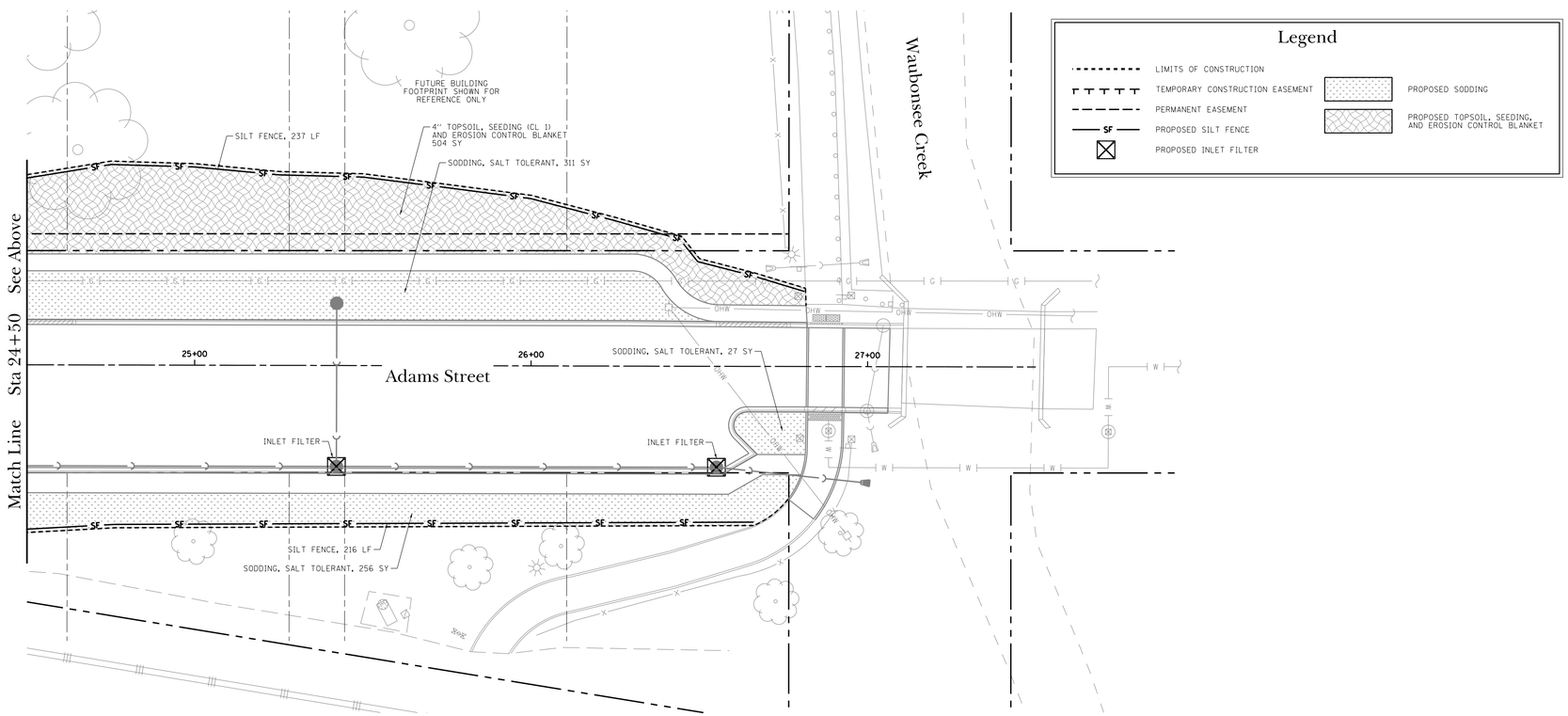

DATE	REVISIONS	ISSUE
2/21/19	ISSUED FOR BIDDING	5.
2/15/19	PER VILLAGE OF OSWEGO, IDOT, FOX METRO	4.
1/11/19	REVISIONS PER VILLAGE OF OSWEGO REVIEW	3.
12/4/18	REVISIONS PER VILLAGE OF OSWEGO REVIEW	2.
11/21/18	REVISIONS PER VILLAGE OF OSWEGO REVIEW	1.

PROJECT STAFF
PROJECT MANAGER:
ENGINEER:
ENGINEER:
ENGINEER:
TECHNICIAN:
TECHNICIAN:

TROTTER
ASSOCIATES, INC.
ENGINEERS AND SURVEYORS
400 W. Veterans Parkway, Suite D
Yorkville, Illinois 60560
Ph. 630-587-0170 • Fax 630-587-0175

The Reserve at Hudson Crossing - Roadway Improvements

Erosion Control Plan - Adams Street

Oswego, Kendall County, Illinois

Project No.: SH0002
File Name: 47_EROS_ADAMS.dgn
Issue Date: 2/21/2019
Scale: 1" = 20'
Sheet Number
47

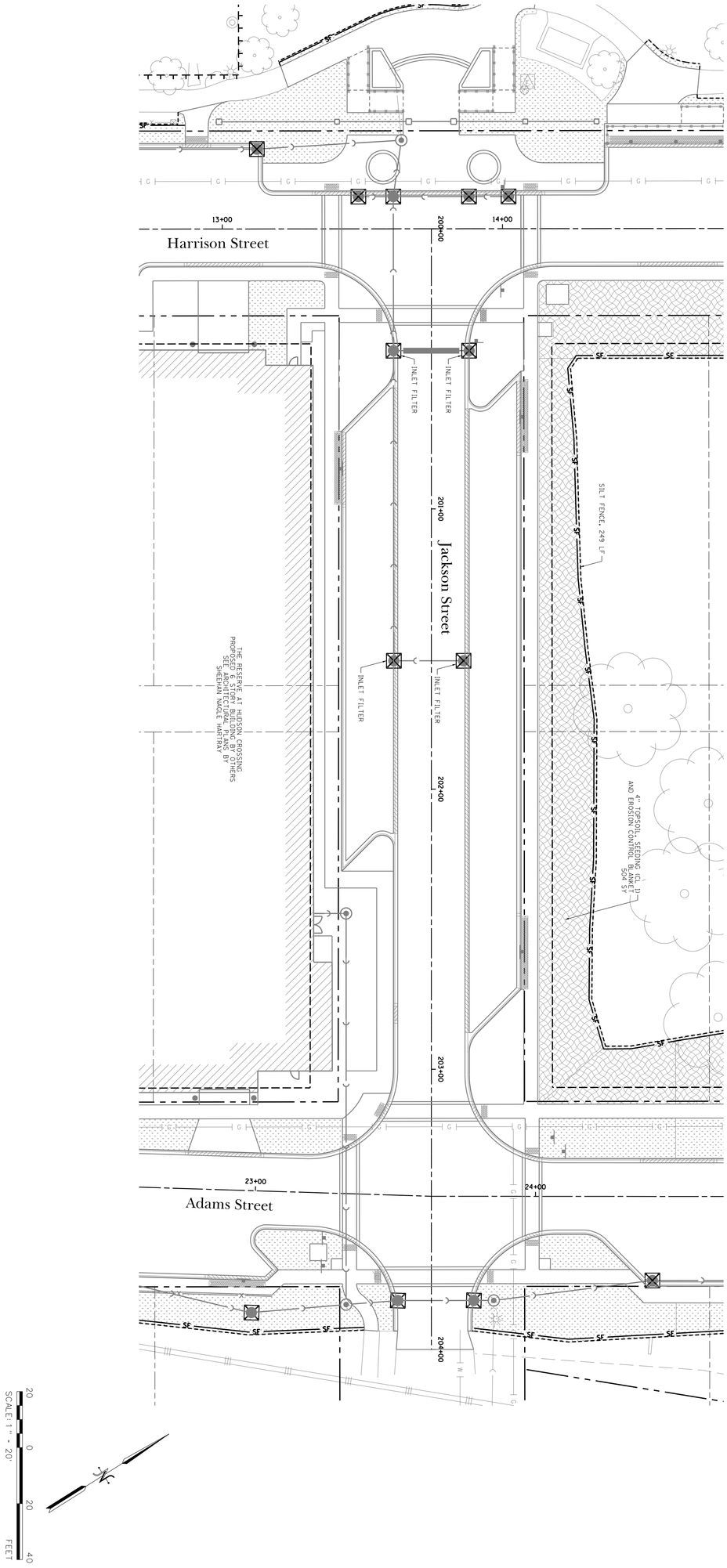

The Reserve at Hudson Crossing - Roadway Improvements

Erosion Control Plan - Jackson Street

Oswego, Kendall County, Illinois

TROTTER and ASSOCIATES, INC.
ENGINEERS AND SURVEYORS
40W201 Wasco Road, Suite D
St. Charles, IL 60175
Ph.: 630-587-0470 • Fax: 630-587-0475

PROJECT STAFF	ISSUE	REVISIONS	DATE
PROJECT MANAGER:			
ENGINEER:			
ENGINEER:			
ENGINEER:	5.	ISSUED FOR BIDDING	2/21/19
TECHNICIAN:	4.	PER VILLAGE OF OSWEGO, IDOT, FOX METRO	2/15/19
TECHNICIAN:	3.	REVISIONS PER VILLAGE OF OSWEGO REVIEW	1/11/19
	2.	REVISIONS PER VILLAGE OF OSWEGO REVIEW	12/4/18
	1.	REVISIONS PER VILLAGE OF OSWEGO REVIEW	11/21/18

Project No.: SH0002

File Name: 48.F805_JaCx.dgn

Issue Date: 2/21/2019

Scale: 1" = 20'

Sheet Number

48

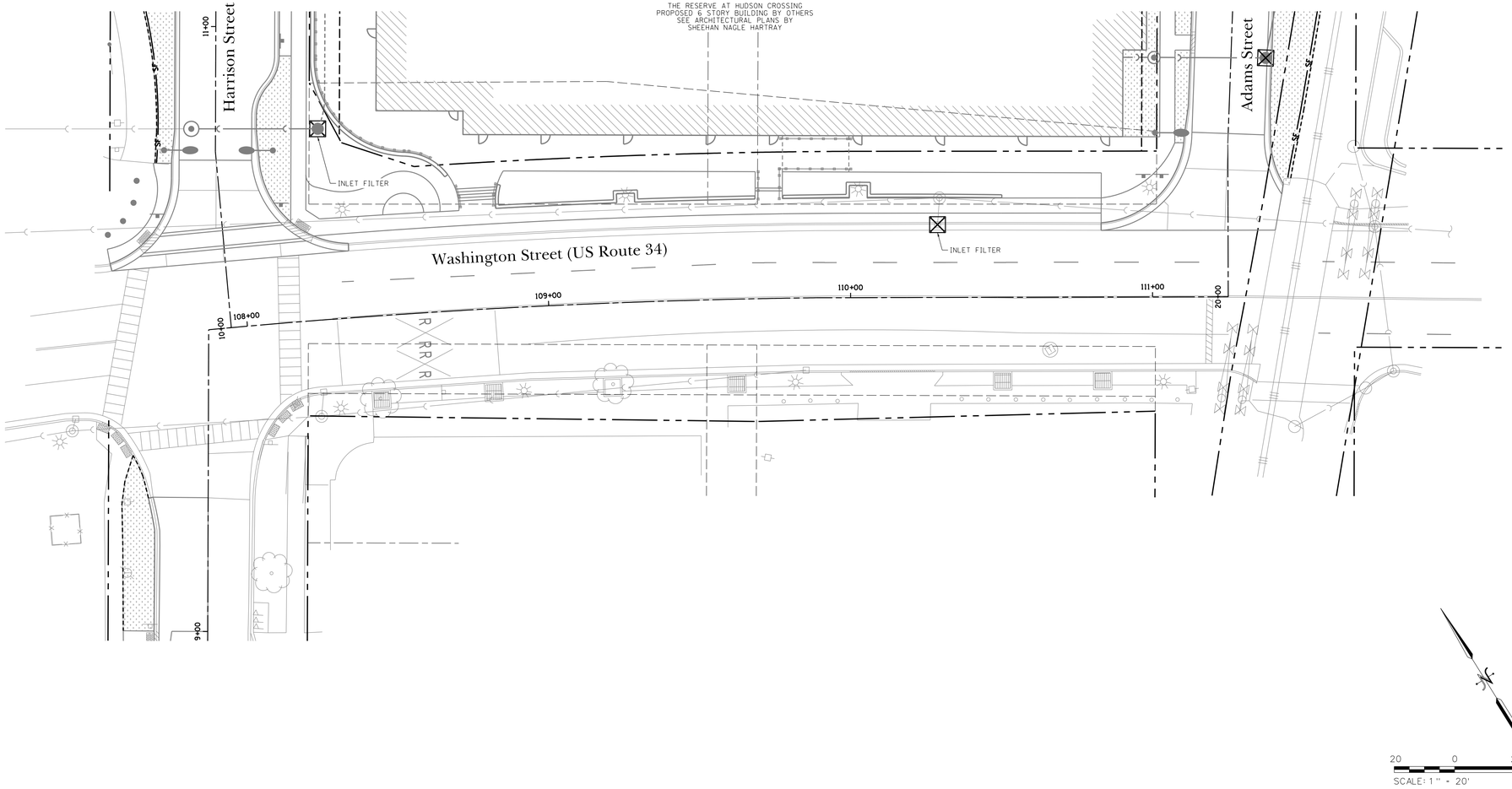

The Reserve at Hudson Crossing - Roadway Improvements

Erosion Control Plan - Washington Street

Oswego, Kendall County, Illinois

PROJECT STAFF		ISSUE	REVISIONS	DATE
PROJECT MANAGER:				
ENGINEER:				
ENGINEER:				
ENGINEER:		5.	ISSUED FOR BIDDING	2/21/19
TECHNICIAN:		4.	PER VILLAGE OF OSWEGO, IDOT, FOX METRO	2/15/19
TECHNICIAN:		3.	REVISIONS PER VILLAGE OF OSWEGO REVIEW	1/11/19
TECHNICIAN:		2.	REVISIONS PER VILLAGE OF OSWEGO REVIEW	12/4/18
		1.	REVISIONS PER VILLAGE OF OSWEGO REVIEW	11/21/18

TROTTER ASSOCIATES, INC.
ENGINEERS AND SURVEYORS
400 W. Velasco Roadt, Suite D
Naperville, Illinois 60563
Ph.: 630-587-0170 • Fax: 630-587-0175

Project No.: SH0002

File Name: 49_EROS_WASH.dgn

Issue Date: 2/21/2019

Scale: 1" = 20'

Sheet Number

49

CONNECTION TO EXISTING MANHOLE

1. ANY FULLY EXPOSED PORTION OF THE EXISTING SANITARY MANHOLE SHALL BE ADJUSTED AND REHABILITATED PER FOX METRO WATER RECLAMATION DISTRICT SPECIFICATIONS. REFER TO FOX METRO WATER RECLAMATION DISTRICT GENERAL NOTES AND TYPE A MANHOLE DETAIL FOR FRAME ADJUSTMENT AND/OR BARREL JOINT SEALING AND CHIMNEY SEAL REQUIREMENTS. ALL LIDS SHALL REMAIN AT GRADE UNLESS OTHERWISE DIRECTED BY THE VILLAGE.

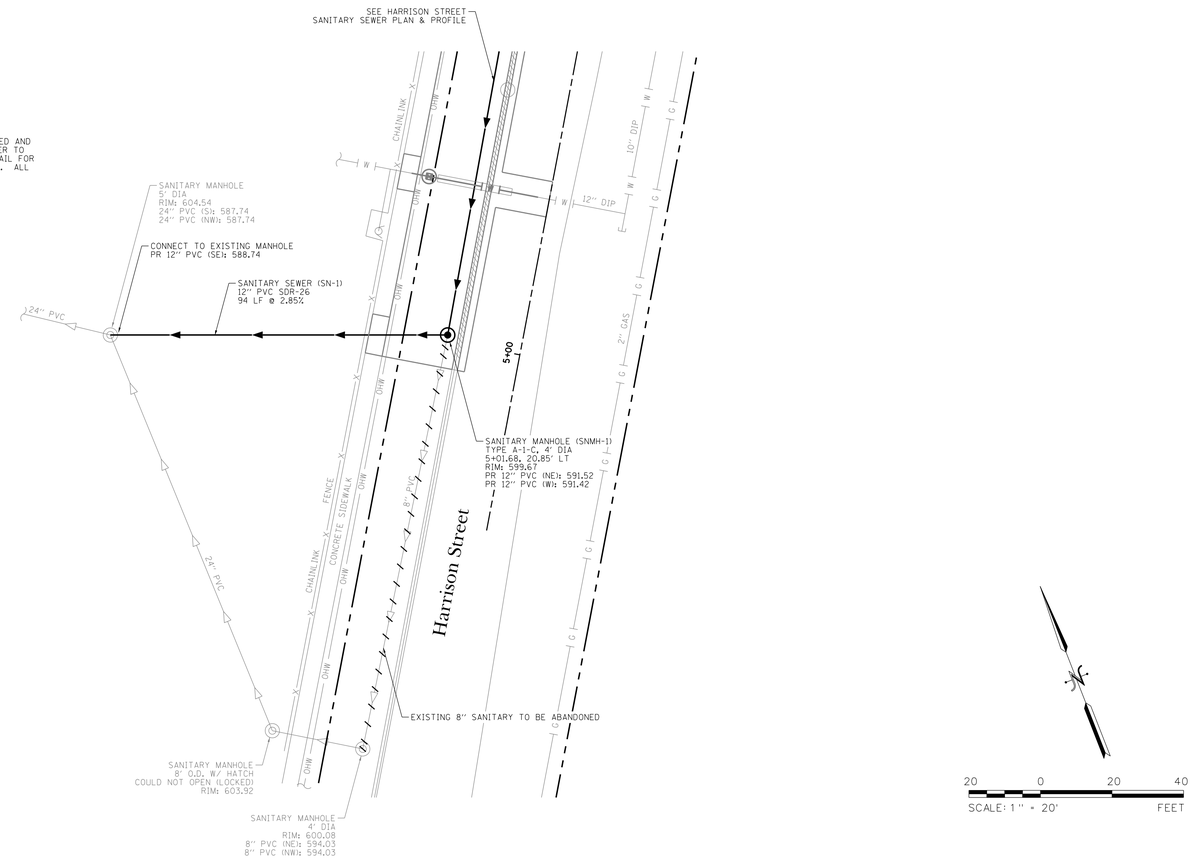

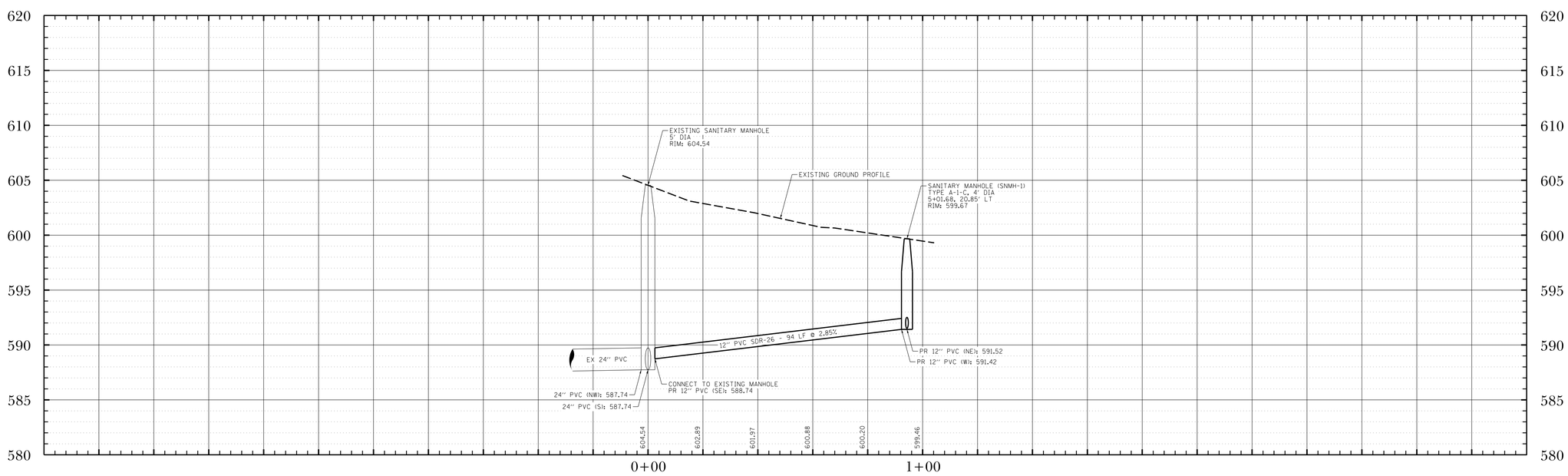

PROJECT STAFF		ISSUE	REVISIONS	DATE
PROJECT MANAGER:				
ENGINEER:				
ENGINEER:				
ENGINEER:		5.	ISSUED FOR BIDDING	2/21/19
TECHNICIAN:		4.	PER VILLAGE OF OSWEGO, IDOT, FOX METRO	2/15/19
TECHNICIAN:		3.	REVISIONS PER VILLAGE OF OSWEGO REVIEW	1/11/19
TECHNICIAN:		2.	REVISIONS PER VILLAGE OF OSWEGO REVIEW	12/4/18
		1.	REVISIONS PER VILLAGE OF OSWEGO REVIEW	11/21/18

TROTTER ASSOCIATES, INC.
ENGINEERS AND SURVEYORS
4019 N. Naper Blvd., Suite D
Naperville, Illinois 60565
Ph.: 630-587-0170 • Fax: 630-587-0175

The Reserve at Hudson Crossing - Roadway Improvements
Sanitary Sewer Plan and Profile
Pump Station to Harrison Street
Oswego, Kendall County, Illinois

Project No.:	SH0002
File Name:	50_SAN_P&P_HAR.dgn
Issue Date:	2/21/2019
Scale:	HORIZ: 1" = 20' VERT: 1" = 5'
Sheet Number	50

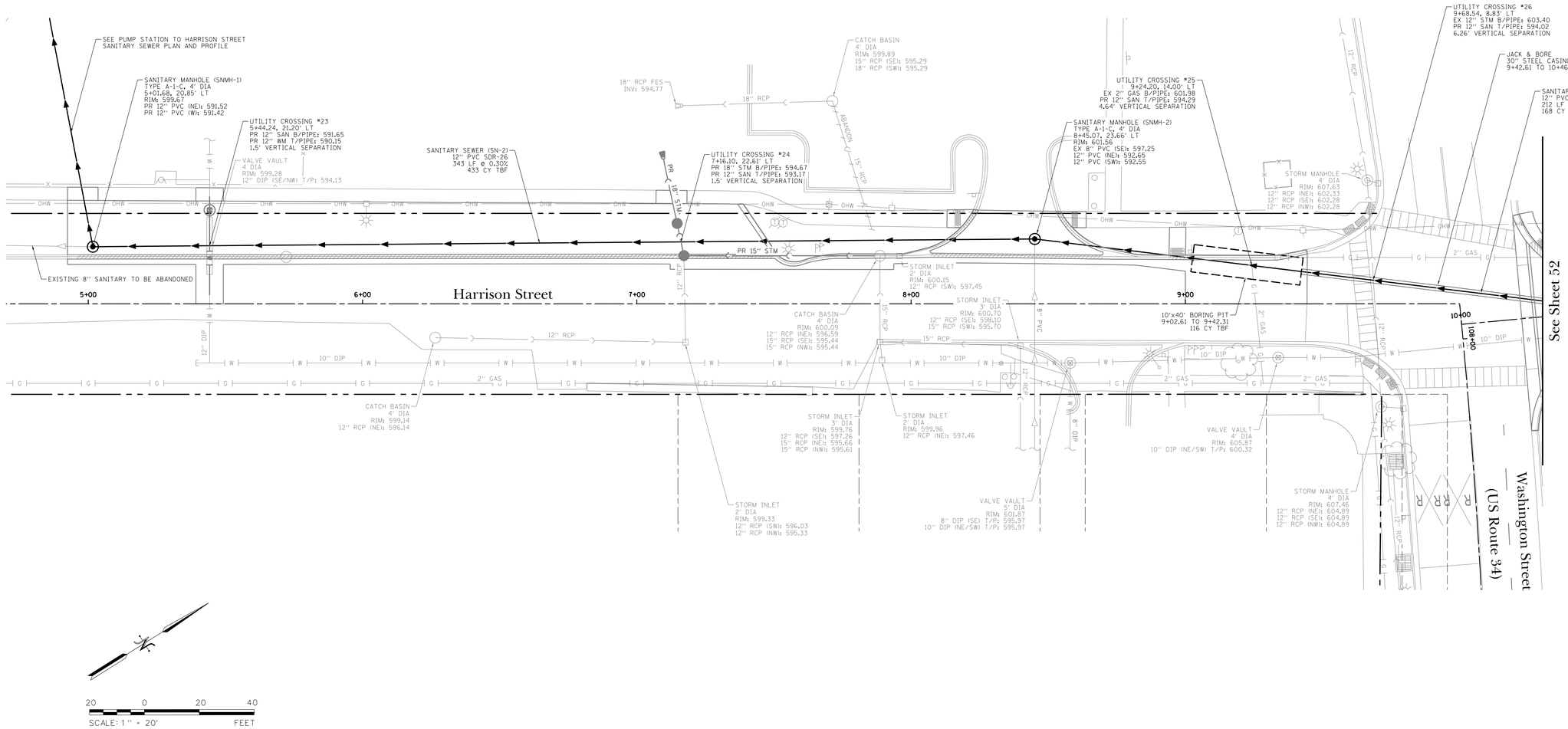

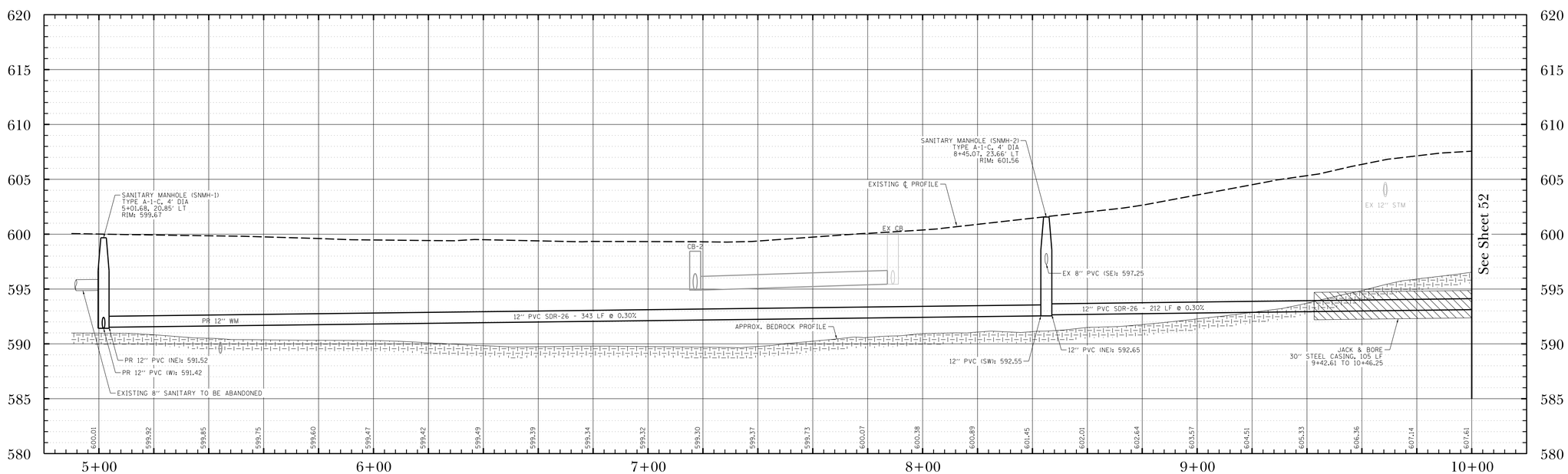

DATE	REVISIONS	ISSUE
2/21/19	ISSUED FOR BIDDING	5.
2/15/19	PER VILLAGE OF OSWEGO, IDOT, FOX METRO	4.
1/11/19	REVISIONS PER VILLAGE OF OSWEGO REVIEW	3.
12/4/18	REVISIONS PER VILLAGE OF OSWEGO REVIEW	2.
11/21/18	REVISIONS PER VILLAGE OF OSWEGO REVIEW	1.

PROJECT STAFF
PROJECT MANAGER:
ENGINEER:
ENGINEER:
ENGINEER:
TECHNICIAN:
TECHNICIAN:

TROTTER ASSOCIATES, INC.
ENGINEERS AND SURVEYORS
40W201 Wilson Road, Suite D
St. Charles, Illinois 60175
Ph: 630-587-0170 • Fax: 630-587-0175

The Reserve at Hudson Crossing - Roadway Improvements
Sanitary Sewer Plan and Profile
Harrison Street Sta 5+00 to Sta 10+00
Oswego, Kendall County, Illinois

Project No.:	SH0002
File Name:	51_SAN_P&P_HAR.dgn
Issue Date:	2/21/2019
Scale:	HORIZ: 1" = 20' VERT: 1" = 5'
Sheet Number	51

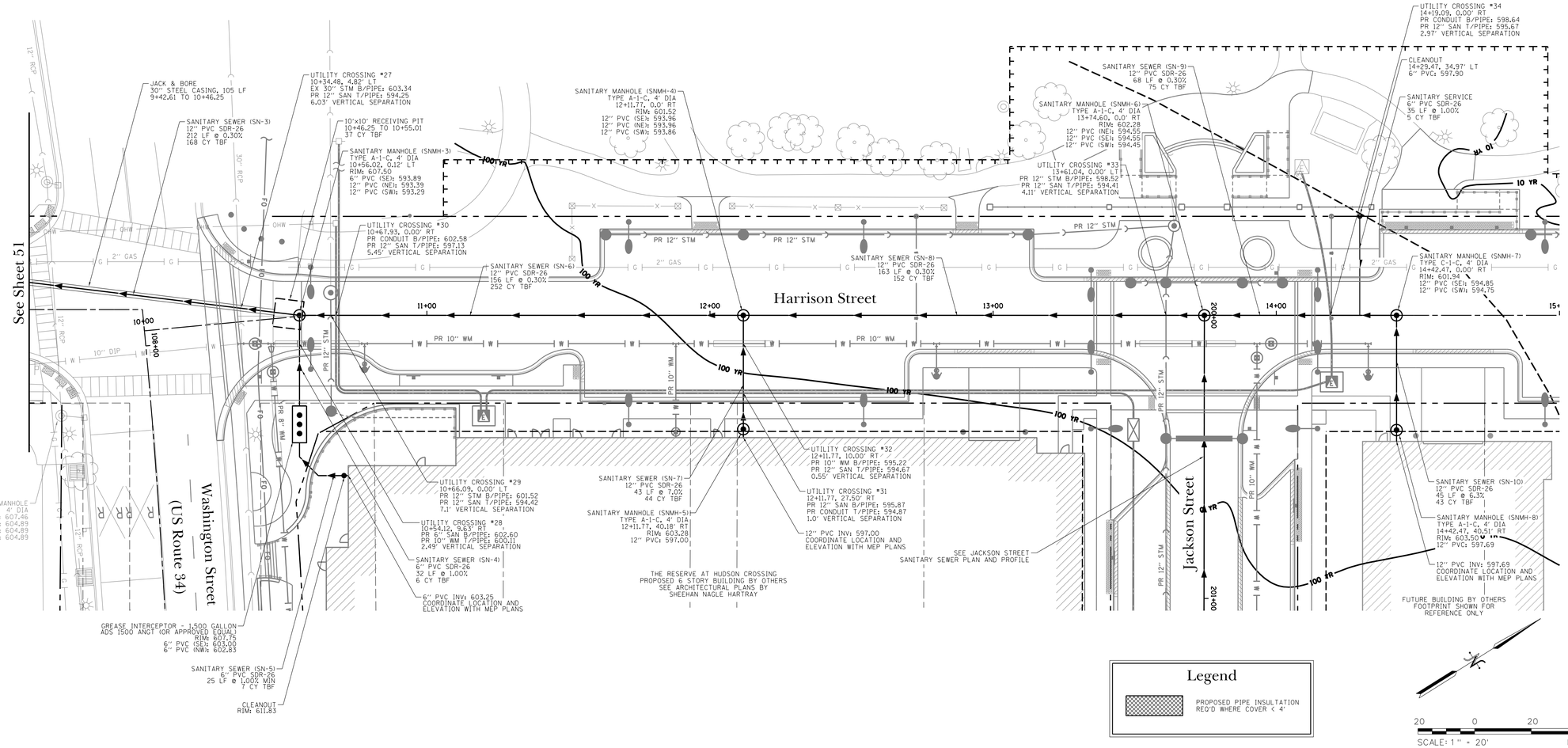

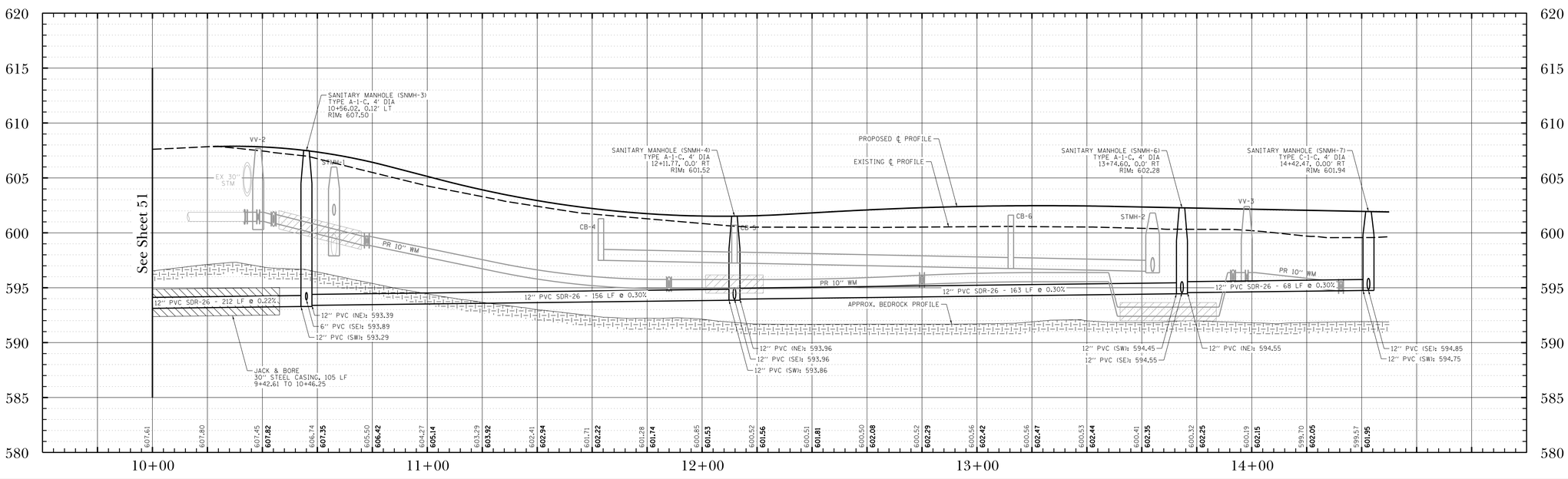

ISSUE	REVISIONS	DATE
5.	ISSUED FOR BIDDING	2/21/19
4.	PER VILLAGE OF OSWEGO, IDOT, FOX METRO	2/15/19
3.	REVISIONS PER VILLAGE OF OSWEGO REVIEW	1/11/19
2.	REVISIONS PER VILLAGE OF OSWEGO REVIEW	12/4/18
1.	REVISIONS PER VILLAGE OF OSWEGO REVIEW	11/21/18

PROJECT STAFF
PROJECT MANAGER:
ENGINEER:
ENGINEER:
ENGINEER:
TECHNICIAN:
TECHNICIAN:

TROTTER ASSOCIATES, INC.
ENGINEERS AND SURVEYORS
409/201 Mason Roadt, Suite D
Plano, Illinois 60545
Ph: 630-587-0170 • Fax: 630-587-0175

The Reserve at Hudson Crossing - Roadway Improvements

Sanitary Sewer Plan and Profile
Harrison Street Sta 10+00 to Sta 14+50

Oswego, Kendall County, Illinois

Project No.: SH0002
File Name: 52_SAN_P&P_HAR.dgn
Issue Date: 2/21/2019
Scale: HORIZ: 1" = 20' VERT: 1" = 5'
Sheet Number
52

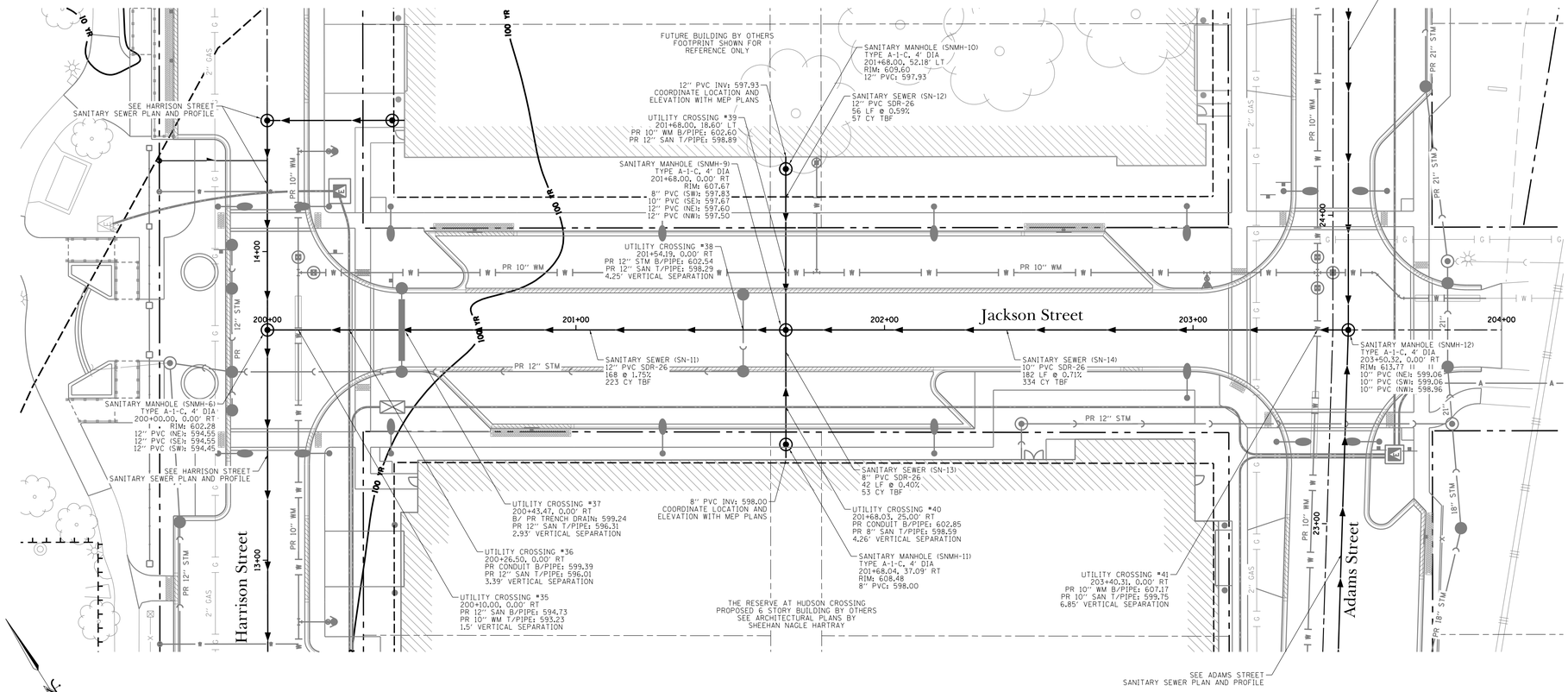

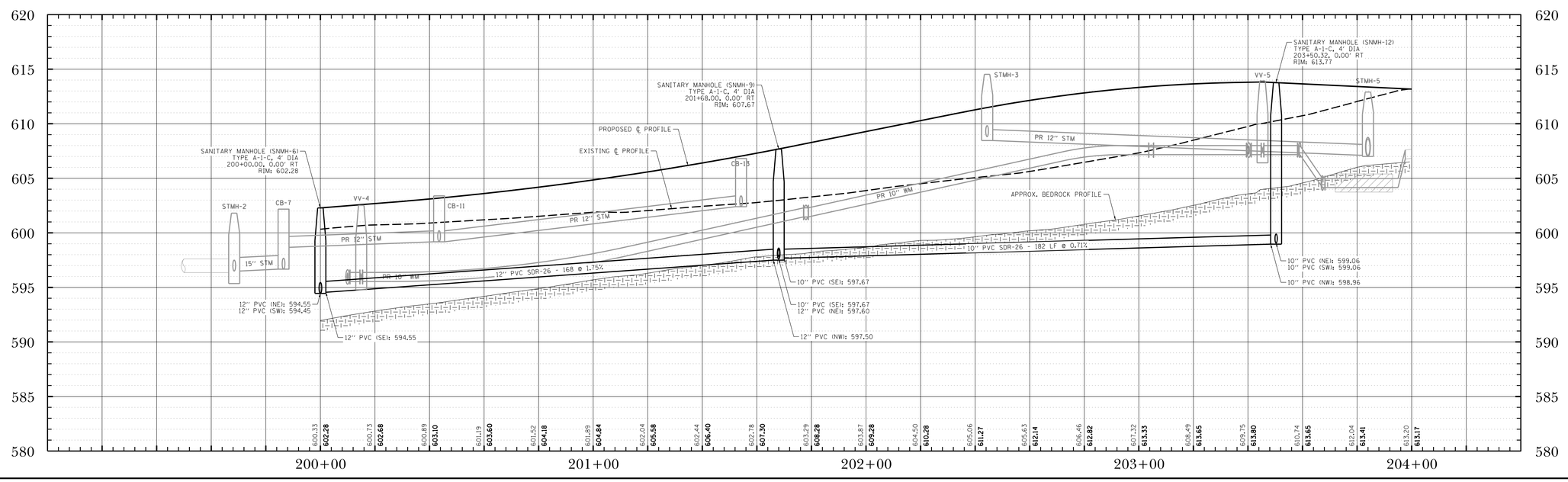

DATE	REVISIONS	ISSUE
2/21/19	ISSUED FOR BIDDING	5.
2/15/19	PER VILLAGE OF OSWEGO, IDOT, FOX METRO	4.
1/11/19	REVISIONS PER VILLAGE OF OSWEGO REVIEW	3.
12/4/18	REVISIONS PER VILLAGE OF OSWEGO REVIEW	2.
11/21/18	REVISIONS PER VILLAGE OF OSWEGO REVIEW	1.

PROJECT STAFF
PROJECT MANAGER:
ENGINEER:
ENGINEER:
ENGINEER:
TECHNICIAN:
TECHNICIAN:

TROTTER ASSOCIATES, INC.
ENGINEERS AND SURVEYORS
40W201 Wilson Road, Suite D
Geneva, Illinois 60134
Ph: 630-587-0170 • Fax: 630-587-0175

The Reserve at Hudson Crossing - Roadway Improvements
Sanitary Sewer Plan and Profile
Jackson Street Sta 200+00 to Sta 203+45.32
Oswego, Kendall County, Illinois

Project No.: SH0002
File Name: 53_SAN_P&P_JACK.dgn
Issue Date: 2/21/2019
Scale: HORIZ: 1" = 20' VERT: 1" = 5'
Sheet Number
53

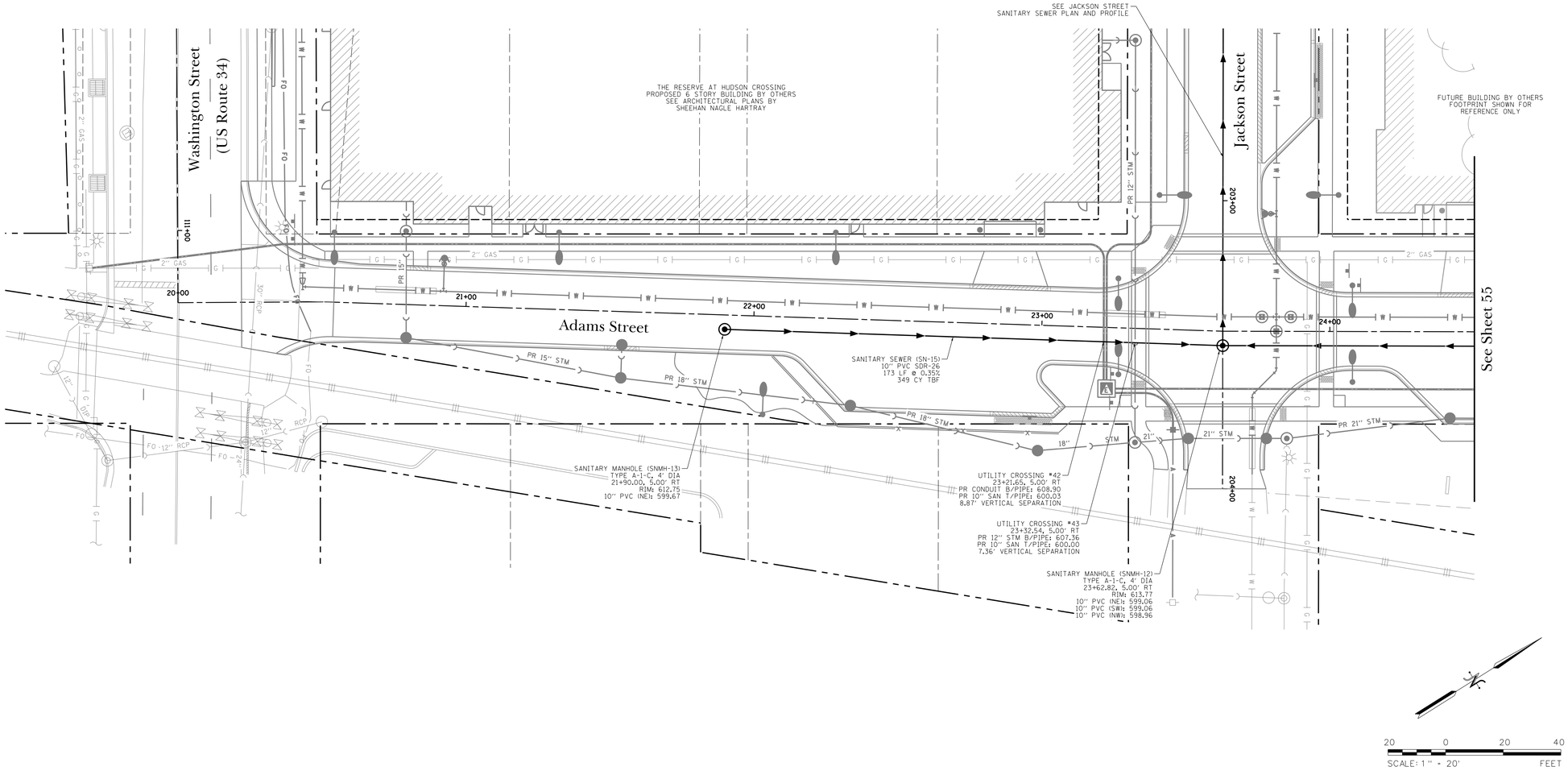

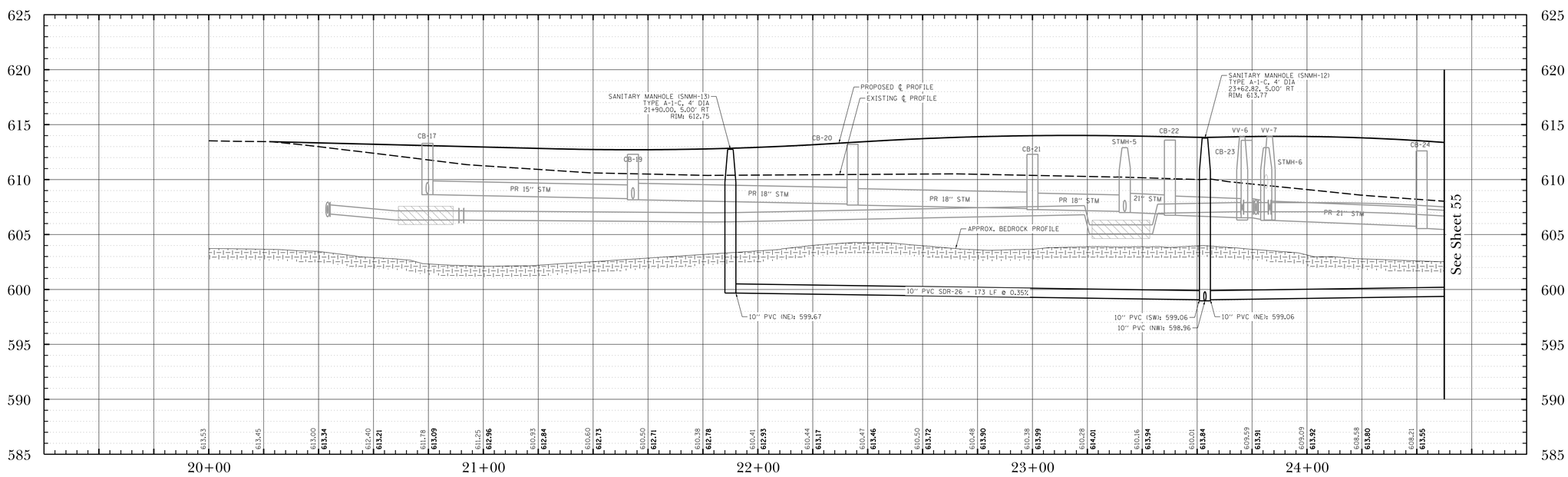

DATE	REVISIONS	ISSUE
2/21/19	ISSUED FOR BIDDING	5.
2/15/19	PER VILLAGE OF OSWEGO, IDOT, FOX METRO	4.
1/11/19	REVISIONS PER VILLAGE OF OSWEGO REVIEW	3.
12/4/18	REVISIONS PER VILLAGE OF OSWEGO REVIEW	2.
11/21/18	REVISIONS PER VILLAGE OF OSWEGO REVIEW	1.

PROJECT STAFF
PROJECT MANAGER:
ENGINEER:
ENGINEER:
ENGINEER:
TECHNICIAN:
TECHNICIAN:

TROTTER ASSOCIATES, INC.
ENGINEERS AND SURVEYORS
400-2D1 Mason Roadd, Suite D
Oswego, Illinois 60543
Ph: 630-587-0170 • Fax: 630-587-0175

The Reserve at Hudson Crossing - Roadway Improvements

Sanitary Sewer Plan and Profile
Adams Street Sta 20+00 to Sta 24+50

Oswego, Kendall County, Illinois

Project No.: SH0002
File Name: 54_SAN_P&P_ADAMS.dgn
Issue Date: 2/21/2019
Scale: HORIZ: 1" = 20' VERT: 1" = 5'
Sheet Number
54

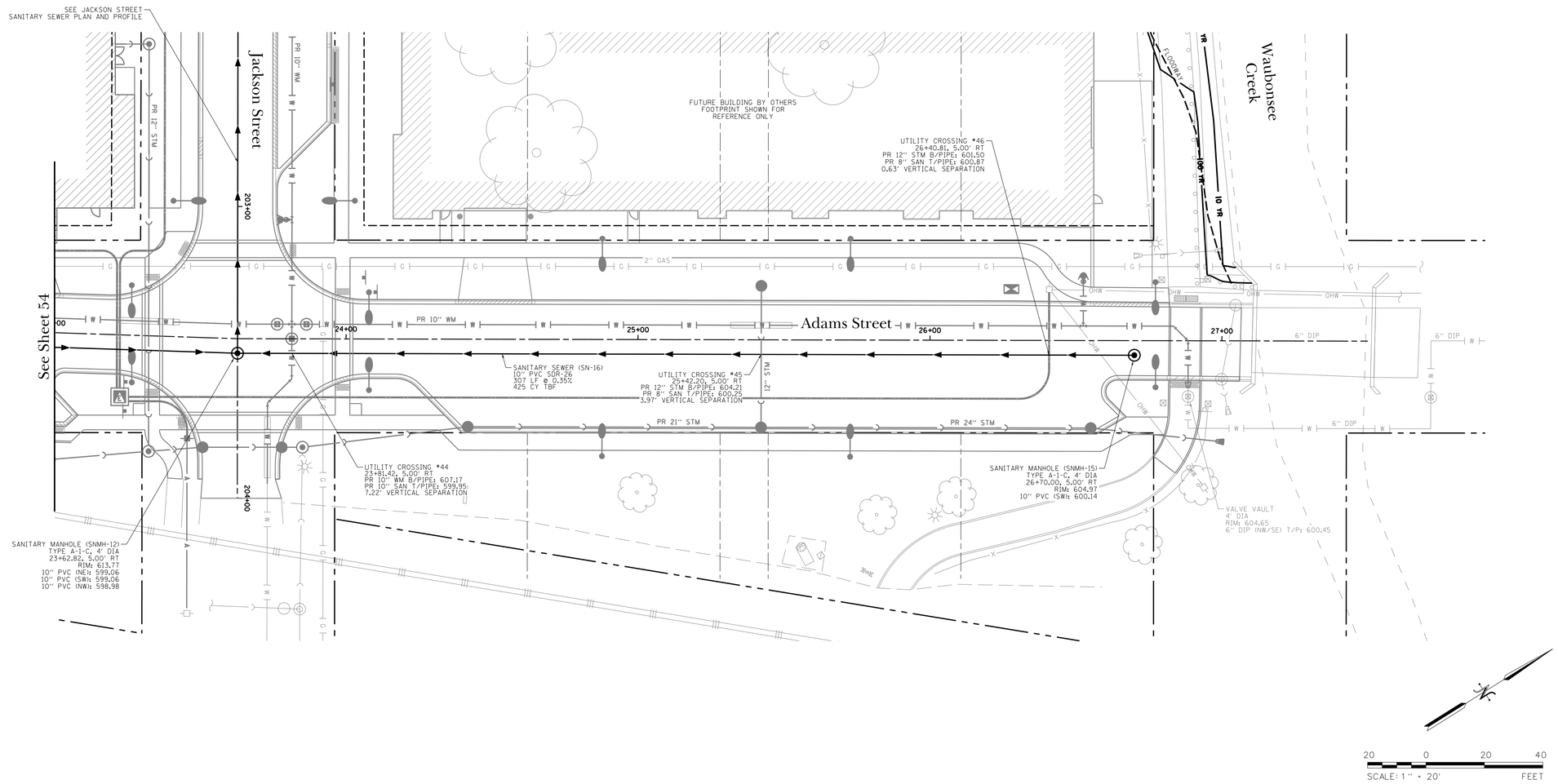

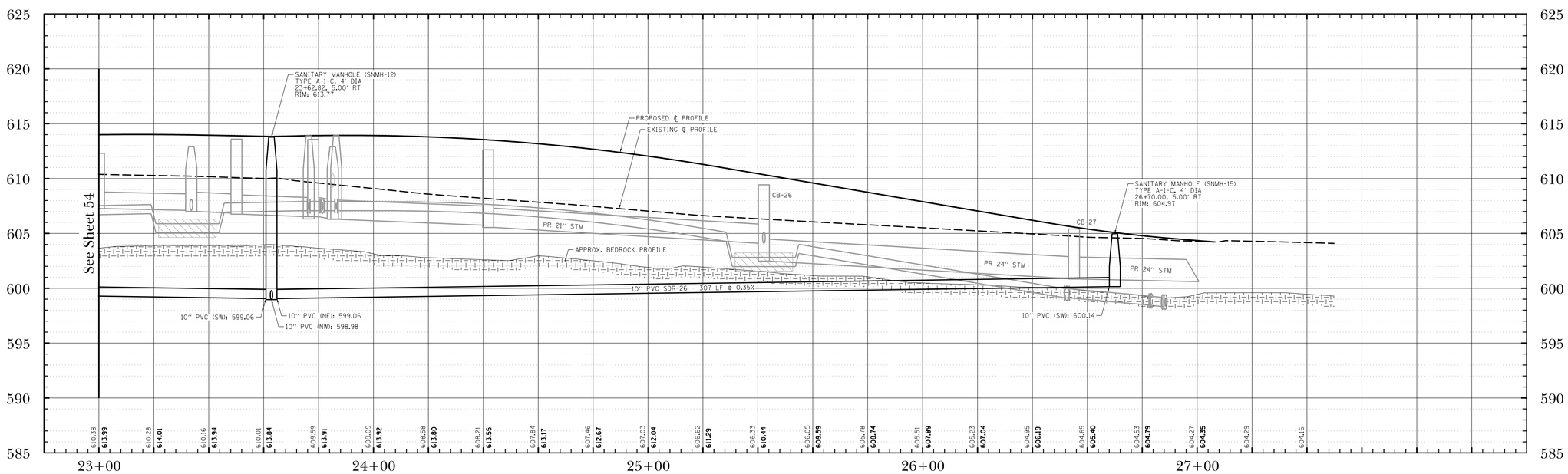

DATE	REVISIONS	ISSUE
2/21/19	ISSUED FOR BIDDING	5.
2/15/19	PER VILLAGE OF OSWEGO, IDOT, FOX METRO	4.
1/11/19	REVISIONS PER VILLAGE OF OSWEGO REVIEW	3.
12/4/18	REVISIONS PER VILLAGE OF OSWEGO REVIEW	2.
11/21/18	REVISIONS PER VILLAGE OF OSWEGO REVIEW	1.

PROJECT STAFF
PROJECT MANAGER:
ENGINEER:
ENGINEER:
ENGINEER:
TECHNICIAN:
TECHNICIAN:

TROTTER
ASSOCIATES, INC.
ENGINEERS AND SURVEYORS
4109 W. Ogden Avenue, Suite D
Lisle, Illinois 60532
Ph: 630-587-0170 • Fax: 630-587-0175

The Reserve at Hudson Crossing - Roadway Improvements
Sanitary Plan and Profile
Adams Street Sta 23+00 to Sta 27+50
Oswego, Kendall County, Illinois

Project No.: SH0002
File Name: 55_SAN_P&P_ADAMS.dgn
Issue Date: 2/21/2019
Scale: HORIZ: 1" = 20' VERT: 1" = 5'
Sheet Number
55

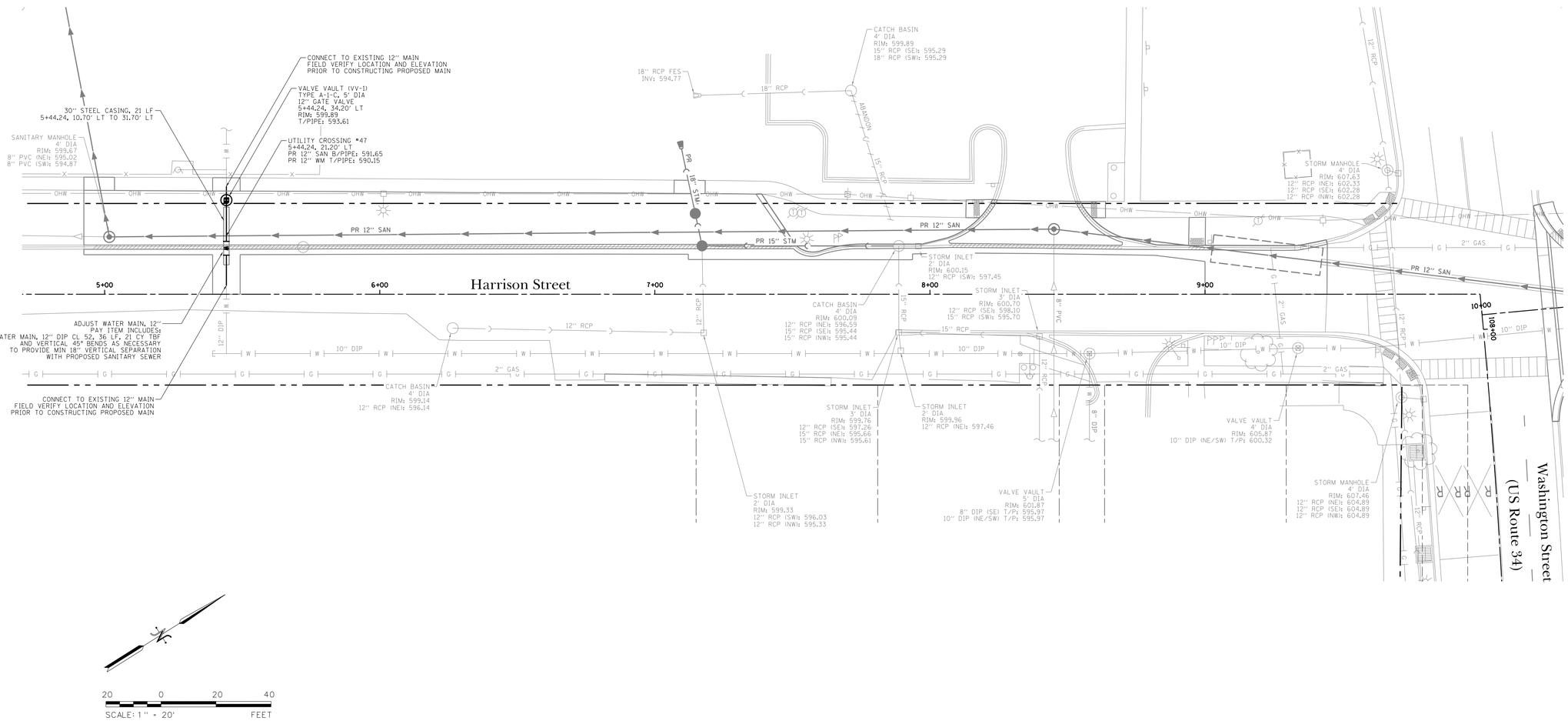

20 0 20 40
SCALE: 1" = 20' FEET

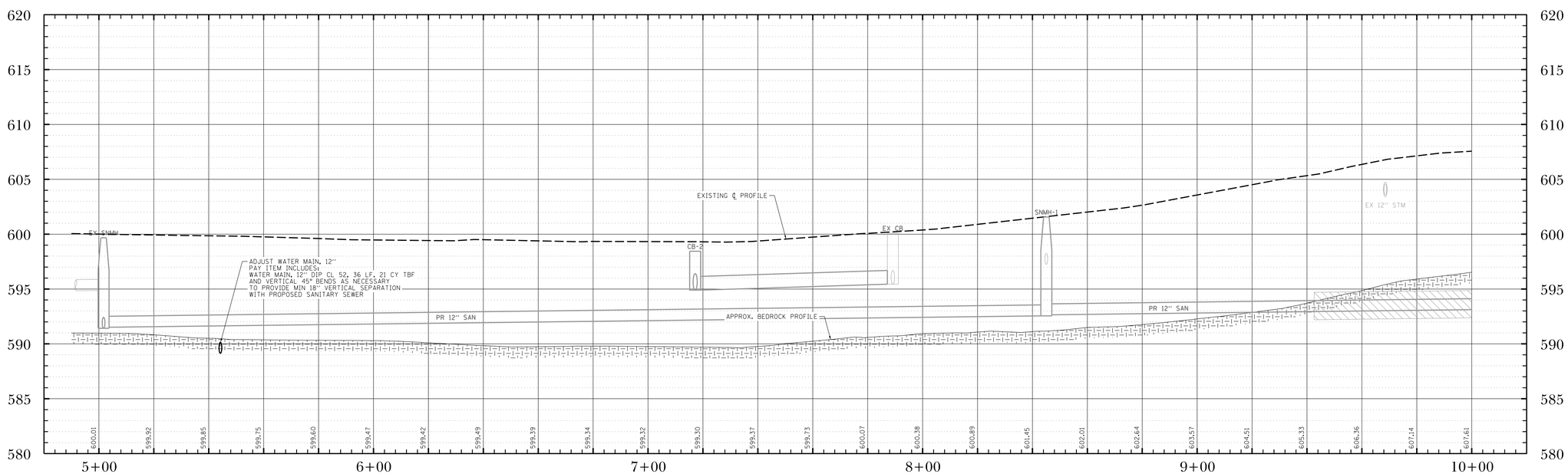

DATE	REVISIONS	ISSUE
2/21/19	ISSUED FOR BIDDING	5.
2/15/19	PER VILLAGE OF OSWEGO, IDOT, FOX METRO	4.
1/11/19	REVISIONS PER VILLAGE OF OSWEGO REVIEW	3.
12/4/18	REVISIONS PER VILLAGE OF OSWEGO REVIEW	2.
11/21/18	REVISIONS PER VILLAGE OF OSWEGO REVIEW	1.

PROJECT STAFF
PROJECT MANAGER:
ENGINEER:
ENGINEER:
ENGINEER:
TECHNICIAN:
TECHNICIAN:

TROTTER ASSOCIATES, INC.
ENGINEERS AND SURVEYORS
400 W. Velasco Roadt, Suite D
Oswego, Illinois 60543
Ph: 630-587-0170 • Fax: 630-587-0175

The Reserve at Hudson Crossing - Roadway Improvements
Water Main Plan and Profile
Harrison Street Sta 5+00 to Sta 10+00
Oswego, Kendall County, Illinois

Project No.: SH0002
File Name: 56_WM_P&P_HAR.dgn
Issue Date: 2/21/2019
Scale: HORIZ: 1" = 20' VERT: 1" = 5'
Sheet Number
56

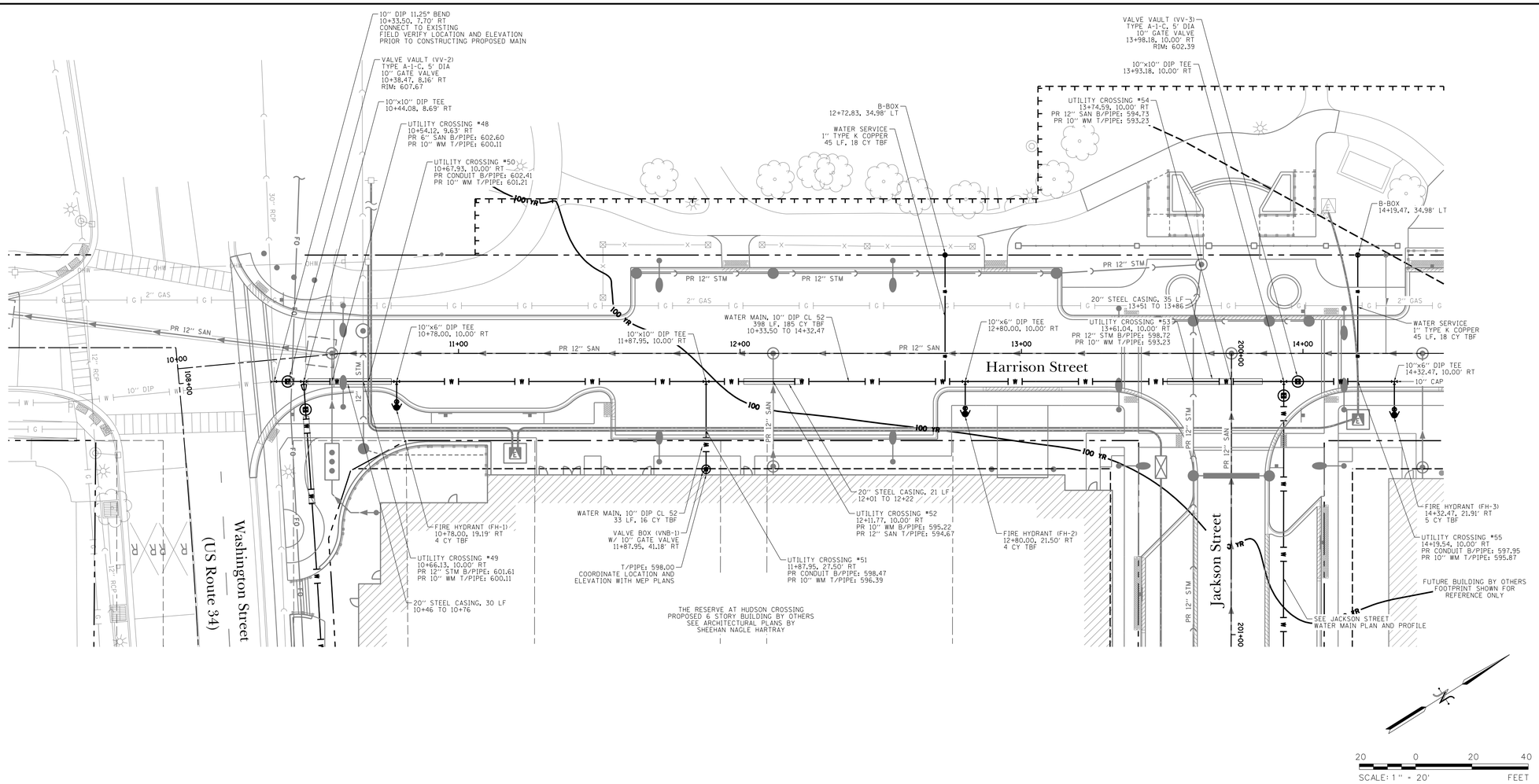

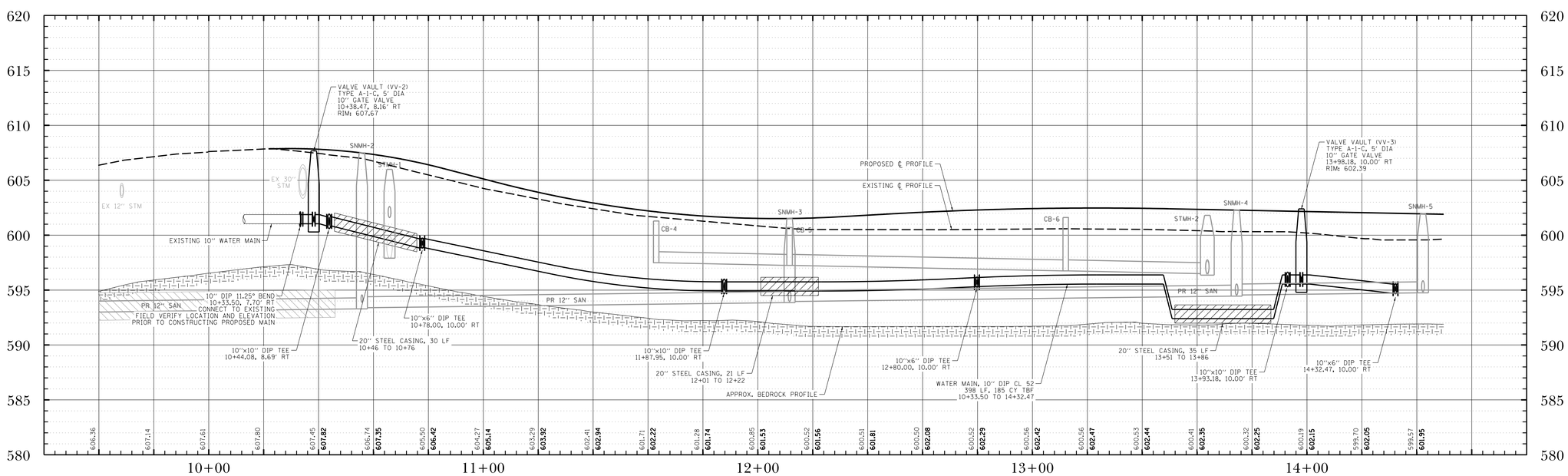

DATE	REVISIONS	ISSUE
2/21/19	ISSUED FOR BIDDING	5.
2/15/19	PER VILLAGE OF OSWEGO, IDOT, FOX METRO	4.
1/11/19	REVISIONS PER VILLAGE OF OSWEGO REVIEW	3.
12/4/18	REVISIONS PER VILLAGE OF OSWEGO REVIEW	2.
11/21/18	REVISIONS PER VILLAGE OF OSWEGO REVIEW	1.

PROJECT STAFF
PROJECT MANAGER:
ENGINEER:
ENGINEER:
ENGINEER:
TECHNICIAN:
TECHNICIAN:

TROTTER ASSOCIATES, INC.
ENGINEERS AND SURVEYORS
409 W. Veterans Parkway, Suite D
Yorkville, Illinois 60560
Ph: 630-387-0170 • Fax: 630-387-0175

The Reserve at Hudson Crossing - Roadway Improvements
Water Main Plan and Profile
Harrison Street Sta 10+00 to Sta 14+50
Oswego, Kendall County, Illinois

Project No.: SH0002
File Name: 57_WM_P&P_HAR.dgn
Issue Date: 2/21/2019
Scale: HORIZ: 1" = 20' VERT: 1" = 5'
Sheet Number
57

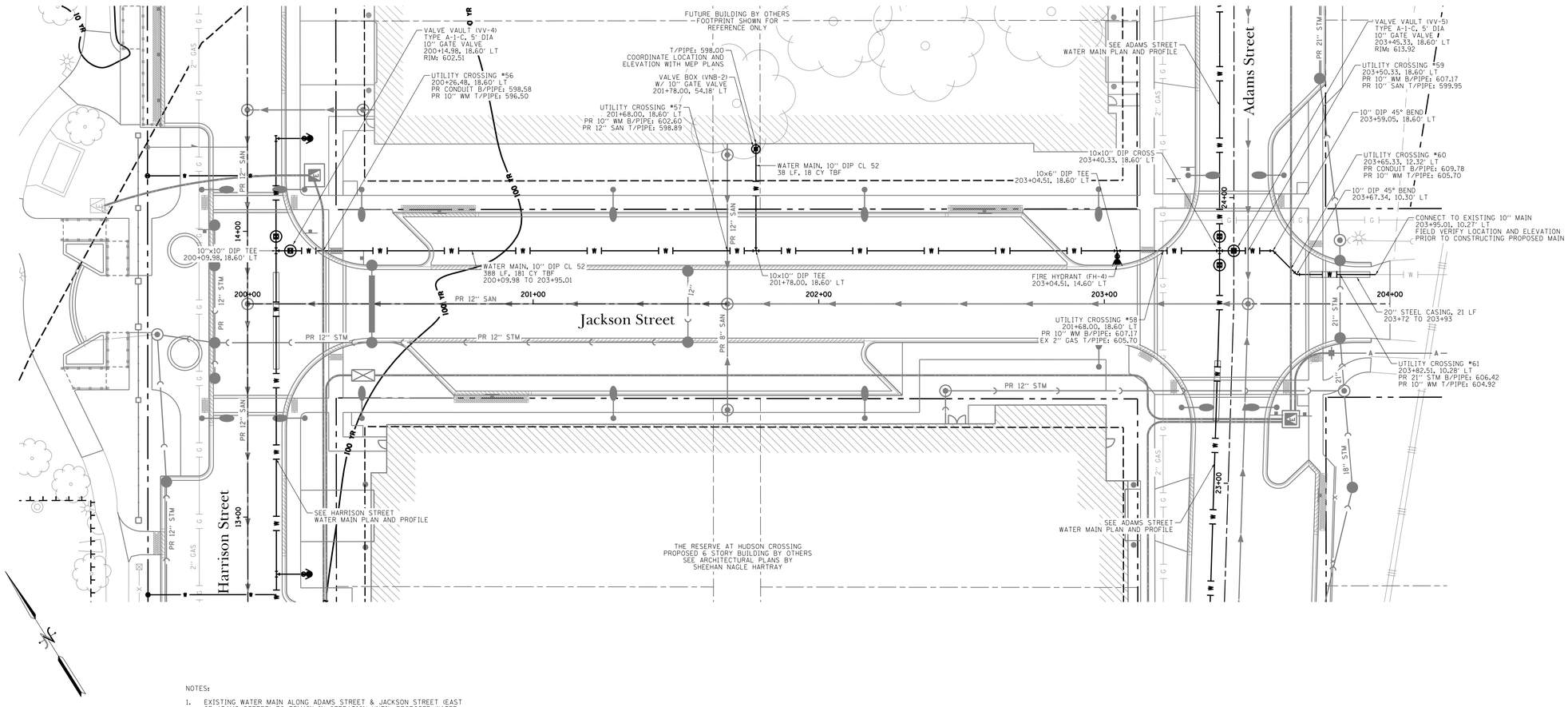

NOTES:

1. EXISTING WATER MAIN ALONG ADAMS STREET & JACKSON STREET (EAST OF ADAMS STREET) TO REMAIN IN OPERATION UNTIL PROPOSED WATER MAIN HAS BEEN CONSTRUCTED, TESTED, AND ACCEPTED.

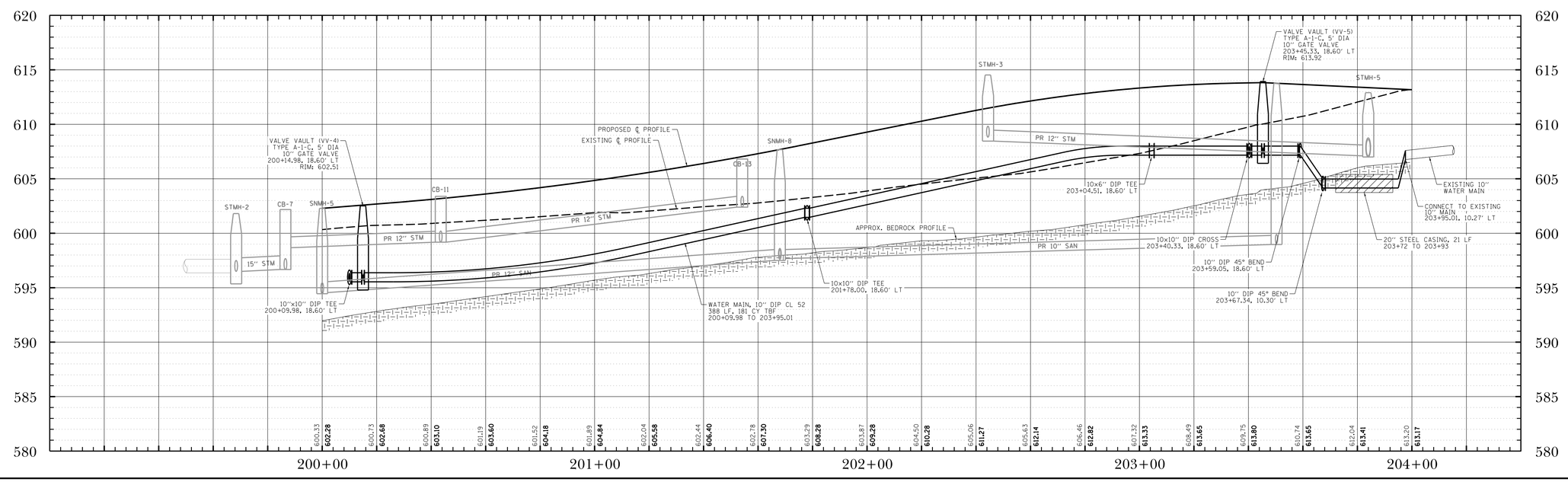

DATE	REVISIONS	ISSUE
2/21/19	ISSUED FOR BIDDING	5.
2/15/19	PER VILLAGE OF OSWEGO, IDOT, FOX METRO	4.
1/11/19	REVISIONS PER VILLAGE OF OSWEGO REVIEW	3.
12/4/18	REVISIONS PER VILLAGE OF OSWEGO REVIEW	2.
11/21/18	REVISIONS PER VILLAGE OF OSWEGO REVIEW	1.

PROJECT STAFF

PROJECT MANAGER:
ENGINEER:
ENGINEER:
ENGINEER:
TECHNICIAN:
ENGINEER:
TECHNICIAN:

TROTTER ASSOCIATES, INC.
ENGINEERS AND SURVEYORS
400 N. Van Buren Road, Suite D
Oswego, Illinois 60543
Ph. 630-587-0170 • Fax: 630-587-0175

The Reserve at Hudson Crossing - Roadway Improvements
Water Main Plan and Profile
Jackson Street Sta 200+00 to Sta 203+45.32
Oswego, Kendall County, Illinois

Project No.: SH0002

File Name: 58_WM_P&P_JACK.dgn

Issue Date: 2/21/2019

Scale: HORIZ: 1" = 20' VERT: 1" = 5'

Sheet Number

58

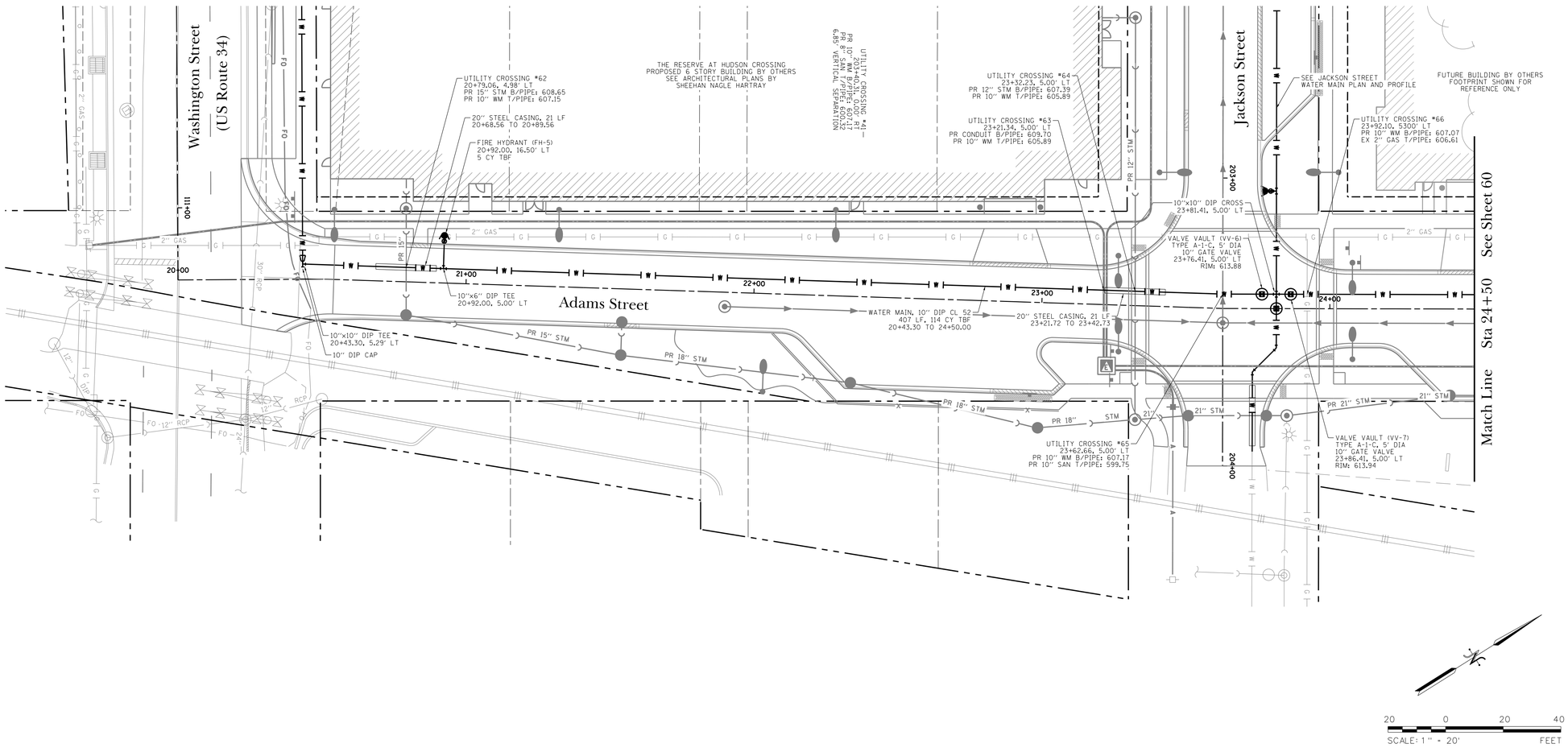

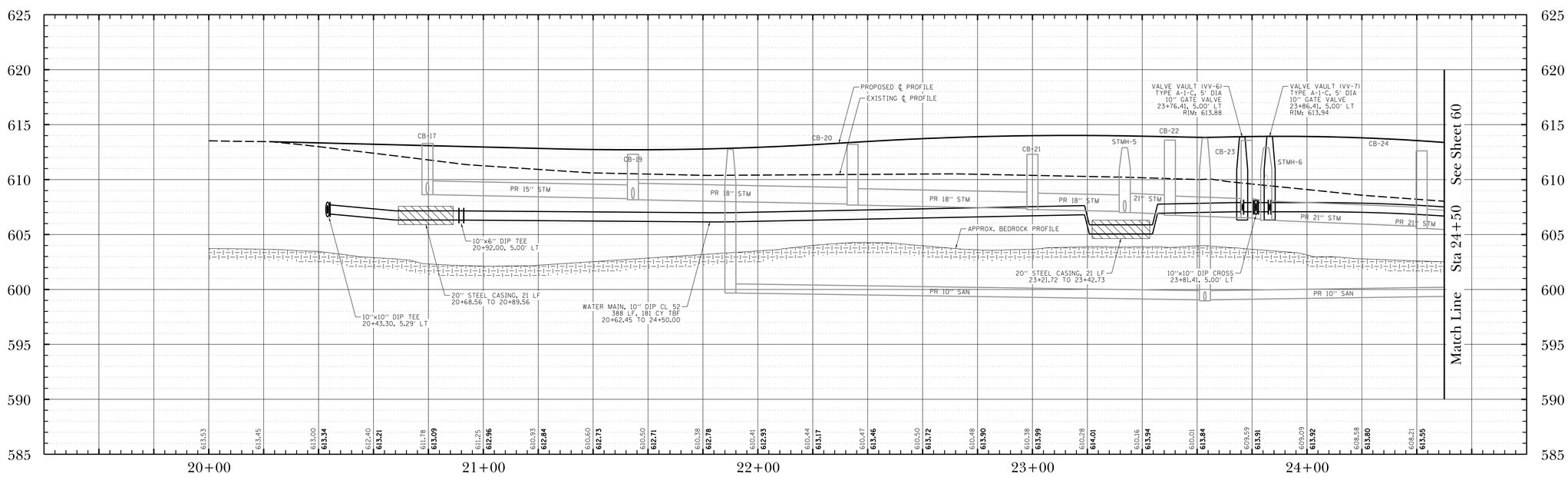

PROJECT STAFF	
PROJECT MANAGER:	
ENGINEER:	
ENGINEER:	
ENGINEER:	
TECHNICIAN:	
TECHNICIAN:	

ISSUE	REVISIONS	DATE
5.	ISSUED FOR BIDDING	2/21/19
4.	PER VILLAGE OF OSWEGO, IDOT, FOX METRO	2/15/19
3.	REVISIONS PER VILLAGE OF OSWEGO REVIEW	1/11/19
2.	REVISIONS PER VILLAGE OF OSWEGO REVIEW	12/4/18
1.	REVISIONS PER VILLAGE OF OSWEGO REVIEW	11/21/18

TROTTER ASSOCIATES, INC.
ENGINEERS AND SURVEYORS
409/201 W. Jackson Boulevard, Suite D
Aurora, Illinois 60506
Ph.: 630-587-0170 • Fax: 630-587-0175

The Reserve at Hudson Crossing - Roadway Improvements
Water Main Plan and Profile
Adams Street Sta 20+00 to Sta 24+50
Oswego, Kendall County, Illinois

Project No.: SH0002

File Name: 59_WM_P&P_ADAMS.dgn

Issue Date: 2/21/2019

Scale: HORIZ: 1" = 20' VERT: 1" = 5'

Sheet Number

59

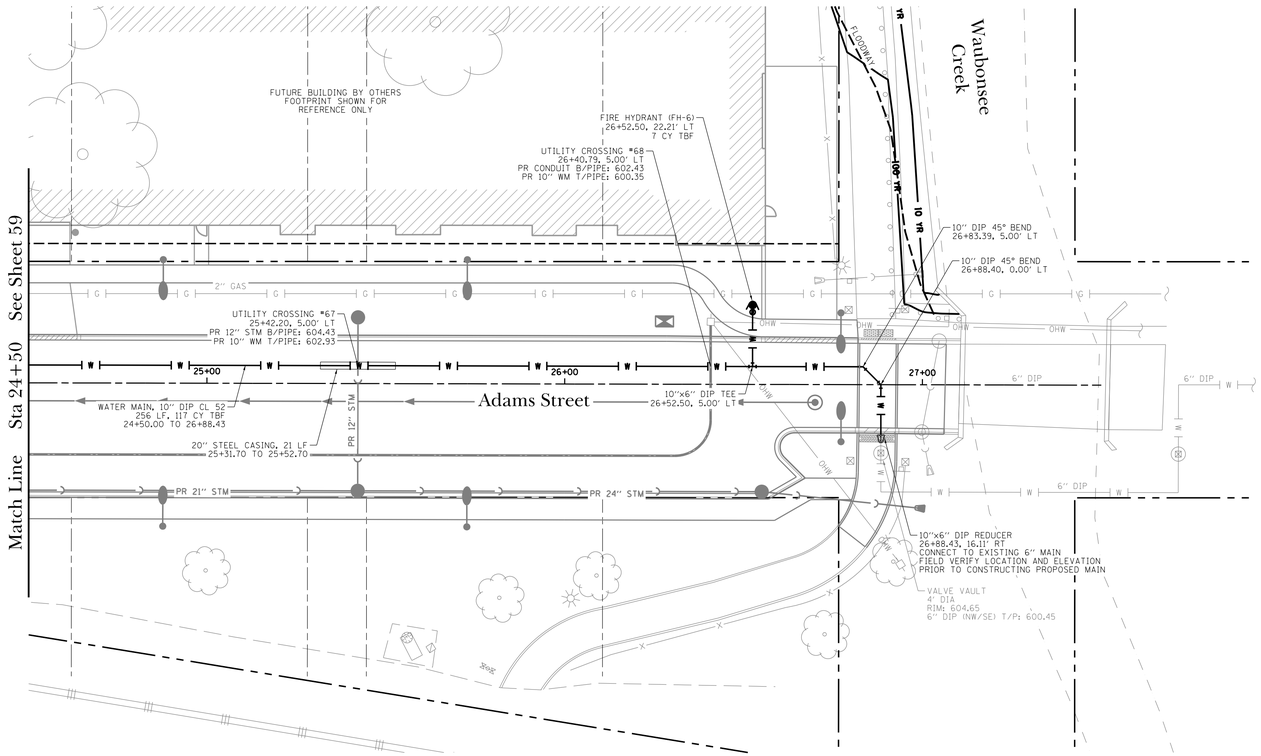

NOTES:

1. EXISTING WATER MAIN ALONG ADAMS STREET & JACKSON STREET (EAST OF ADAMS STREET) TO REMAIN IN OPERATION UNTIL PROPOSED WATER MAIN HAS BEEN CONSTRUCTED, TESTED, AND ACCEPTED.

20 0 20 40
SCALE: 1" = 20' FEET

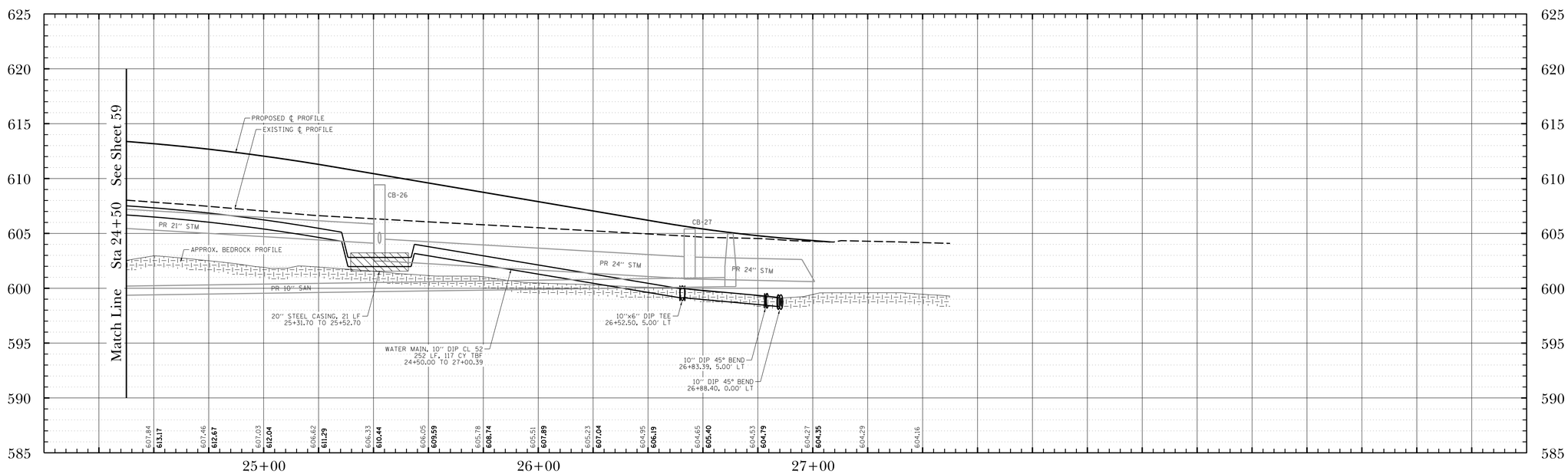

PROJECT STAFF		ISSUE	REVISIONS	DATE
PROJECT MANAGER:				
ENGINEER:				
ENGINEER:				
ENGINEER:				
TECHNICIAN:		5.	ISSUED FOR BIDDING	2/21/19
TECHNICIAN:		4.	PER VILLAGE OF OSWEGO, IDOT, FOX METRO	2/15/19
TECHNICIAN:		3.	REVISIONS PER VILLAGE OF OSWEGO REVIEW	1/11/19
		2.	REVISIONS PER VILLAGE OF OSWEGO REVIEW	12/4/18
		1.	REVISIONS PER VILLAGE OF OSWEGO REVIEW	11/21/18

TROTTER
ASSOCIATES, INC.
ENGINEERS AND SURVEYORS
40W201 Wasco Roadt, Suite D
St. Charles, Illinois 60175
Ph: 630-587-0170 • Fax: 630-587-0175

The Reserve at Hudson Crossing - Roadway Improvements
Water Main Plan and Profile
Adams Street Sta 24+50 to Sta 27+50
Oswego, Kendall County, Illinois

Project No.: SH0002
File Name: 60_WM_P&P_ADAMS.dgn
Issue Date: 2/21/2019
Scale: HORIZ: 1" = 20' VERT: 1" = 5'
Sheet Number
60

THE RESERVE AT HUDSON CROSSING
PROPOSED 6 STORY BUILDING BY OTHERS
SEE ARCHITECTURAL PLANS BY
SHEEHAN NAGLE HARTRAY

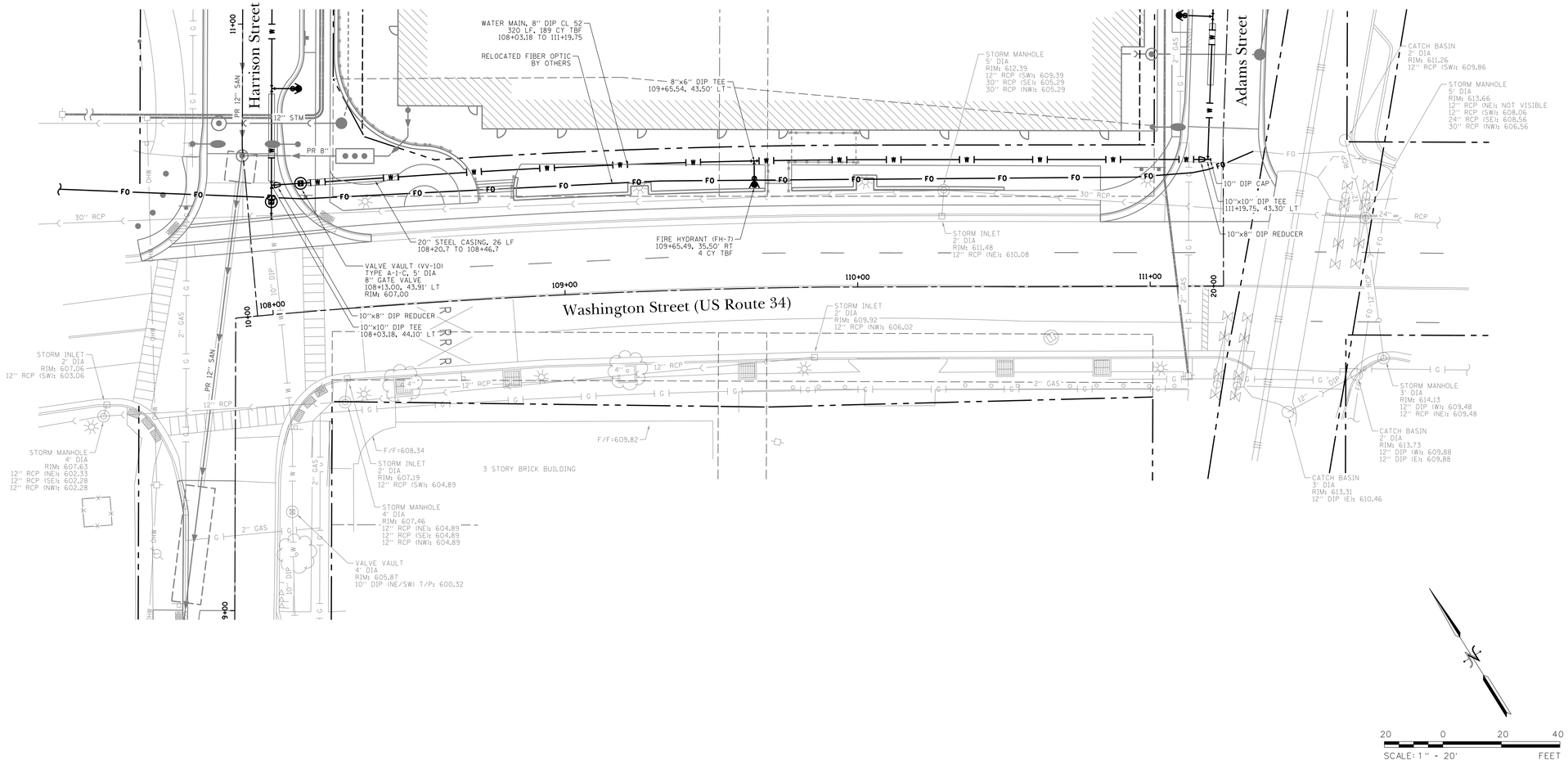

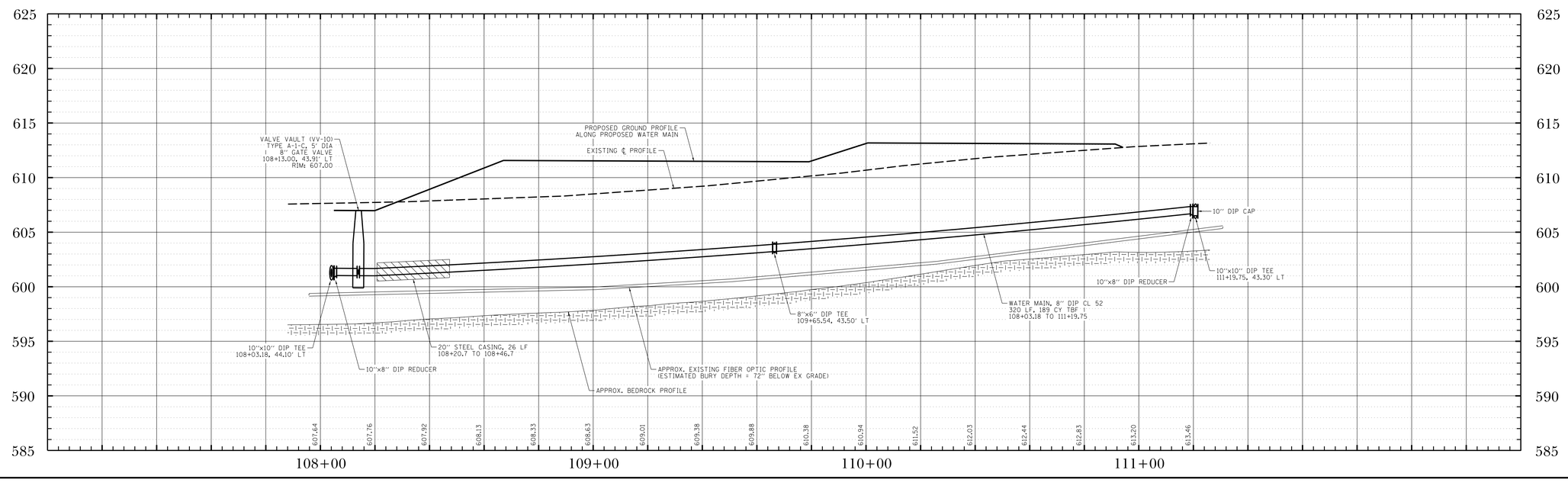

DATE	REVISIONS	ISSUE
2/21/19	ISSUED FOR BIDDING	5.
2/15/19	PER VILLAGE OF OSWEGO, IDOT, FOX METRO	4.
1/11/19	REVISIONS PER VILLAGE OF OSWEGO REVIEW	3.
12/4/18	REVISIONS PER VILLAGE OF OSWEGO REVIEW	2.
11/21/18	REVISIONS PER VILLAGE OF OSWEGO REVIEW	1.

PROJECT STAFF
PROJECT MANAGER:
ENGINEER:
ENGINEER:
ENGINEER:
TECHNICIAN:
TECHNICIAN:

TROTTER ASSOCIATES, INC.
ENGINEERS AND SURVEYORS
409 W. Veterans Parkway, Suite D
Yorkville, Illinois 60560
Ph.: 630-387-0170 • Fax: 630-387-0175

The Reserve at Hudson Crossing - Roadway Improvements
Water Main Plan and Profile
Washington Street Sta 107+94.64 to Sta 111+25.04
Oswego, Kendall County, Illinois

Project No.: SH0002
File Name: 61_WM_P&P_WASH.dgn
Issue Date: 2/21/2019
Scale: HORIZ: 1" = 20' VERT: 1" = 5'
Sheet Number
61

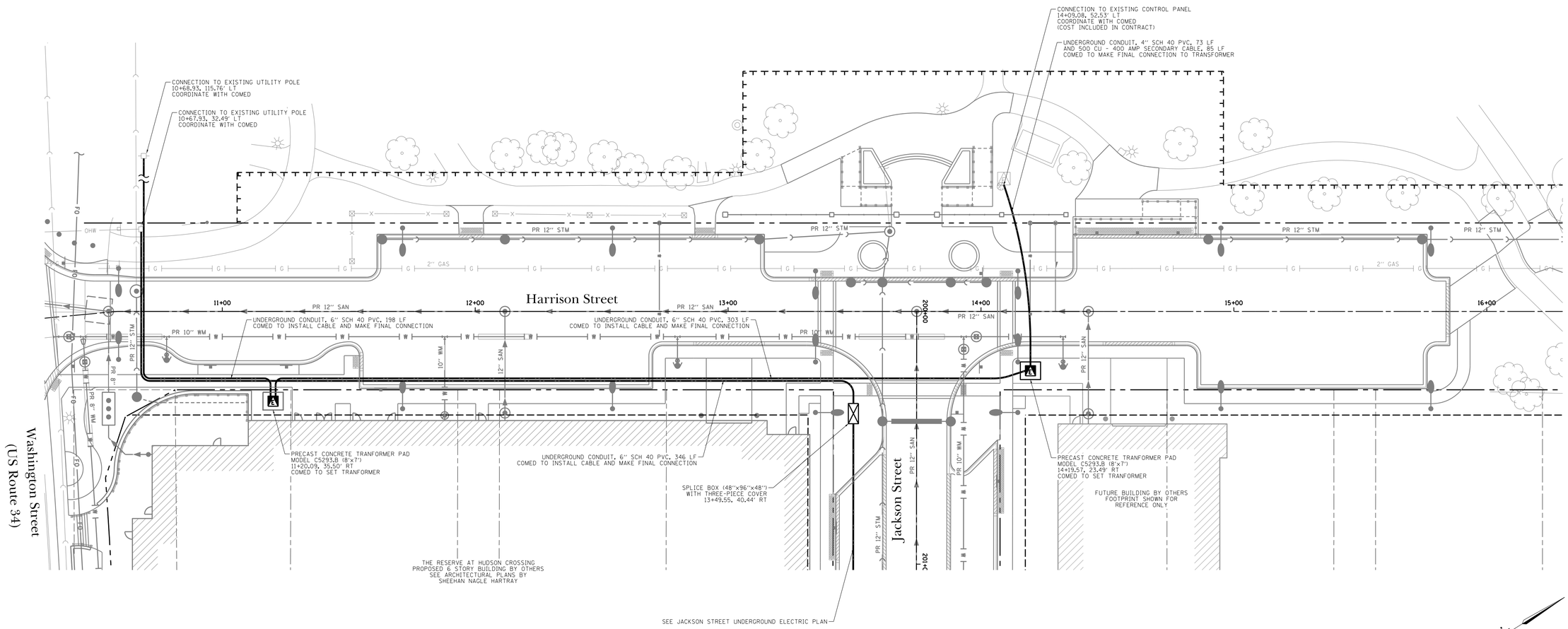

NOTES:

1. ALL ELECTRIC WORK SHALL BE CONSTRUCTED IN ACCORDANCE WITH COMED REQUIREMENTS.
2. RESTORATION OUTSIDE LIMITS OF ROADWAY IMPROVEMENTS SHALL BE INCIDENTAL TO THE CONTRACT.

20 0 20 40
SCALE: 1" = 20' FEET

ISSUE	REVISIONS	DATE
	ISSUED FOR BIDDING	2/21/19
5.	PER VILLAGE OF OSWEGO, IDOT, FOX METRO	2/15/19
4.	REVISIONS PER VILLAGE OF OSWEGO REVIEW	1/11/19
3.	REVISIONS PER VILLAGE OF OSWEGO REVIEW	12/4/18
2.	REVISIONS PER VILLAGE OF OSWEGO REVIEW	11/21/18
1.		

PROJECT STAFF
PROJECT MANAGER:
ENGINEER:
ENGINEER:
ENGINEER:
TECHNICIAN:
TECHNICIAN:

TROTTER & ASSOCIATES, INC.
ENGINEERS AND SURVEYORS
409/201 Venus Rondt, Suite D
Oswego, Illinois 60543
Ph. 630-587-0170 • Fax 630-587-0175

The Reserve at Hudson Crossing - Roadway Improvements

Underground Electric Plan - Harrison Street

Oswego, Kendall County, Illinois

Project No.: SH0002
File Name: 62_ELEC_HAR.dgn
Issue Date: 2/21/2019
Scale: 1" = 20'
Sheet Number
62

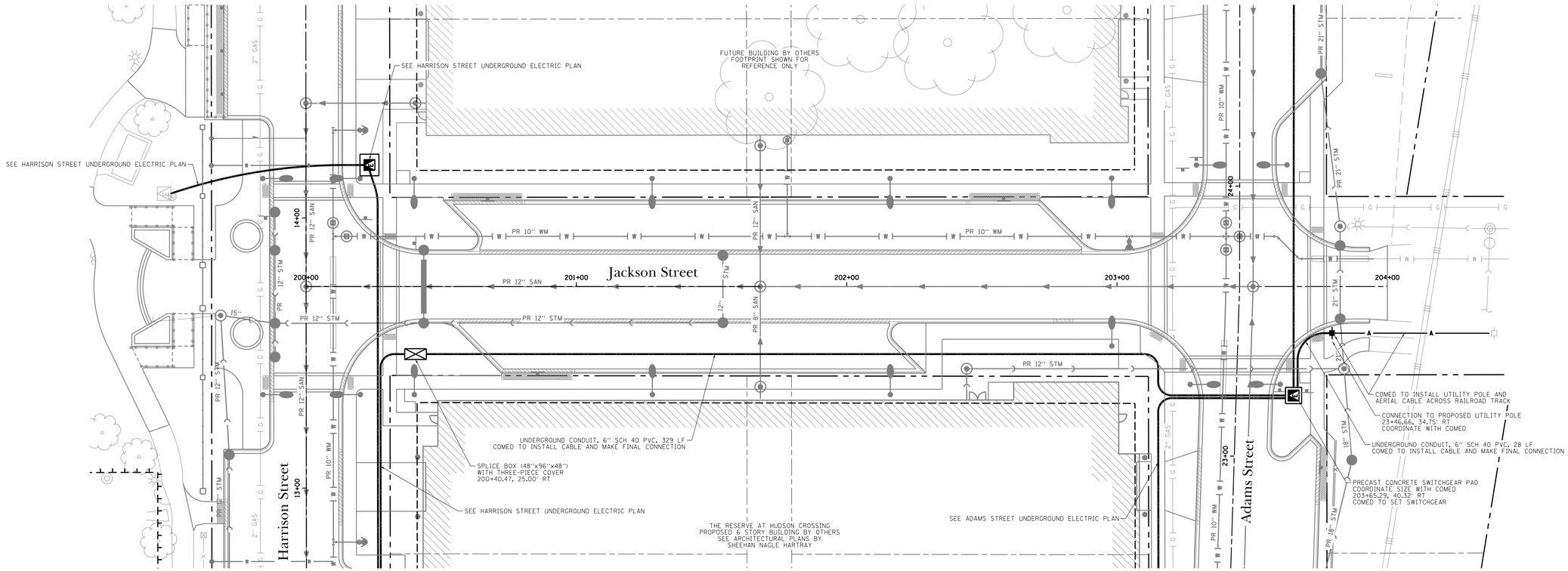

NOTES:

1. ALL ELECTRIC WORK SHALL BE CONSTRUCTED IN ACCORDANCE WITH COMED REQUIREMENTS.
2. RESTORATION OUTSIDE LIMITS OF ROADWAY IMPROVEMENTS SHALL BE INCIDENTAL TO THE CONTRACT.

20 0 20 40
SCALE: 1" = 20' FEET

DATE	REVISIONS	ISSUE
2/21/19	ISSUED FOR BIDDING	5.
2/15/19	PER VILLAGE OF OSWEGO, IDOT, FOX METRO	4.
1/11/19	REVISIONS PER VILLAGE OF OSWEGO REVIEW	3.
12/4/18	REVISIONS PER VILLAGE OF OSWEGO REVIEW	2.
11/21/18	REVISIONS PER VILLAGE OF OSWEGO REVIEW	1.

PROJECT STAFF
PROJECT MANAGER:
ENGINEER:
ENGINEER:
ENGINEER:
TECHNICIAN:
TECHNICIAN:

TROTTER ASSOCIATES, INC.
ENGINEERS AND SURVEYORS
400 W. Velasco Roadt, Suite D
Oswego, Illinois 60543
Ph. 630-587-0170 • Fax 630-587-0175

The Reserve at Hudson Crossing - Roadway Improvements

Underground Electric Plan - Jackson Street

Oswego, Kendall County, Illinois

Project No.: SH0002
File Name: 63_ELEC_JACK.dgn
Issue Date: 2/21/2019
Scale: 1" = 20'
Sheet Number
63

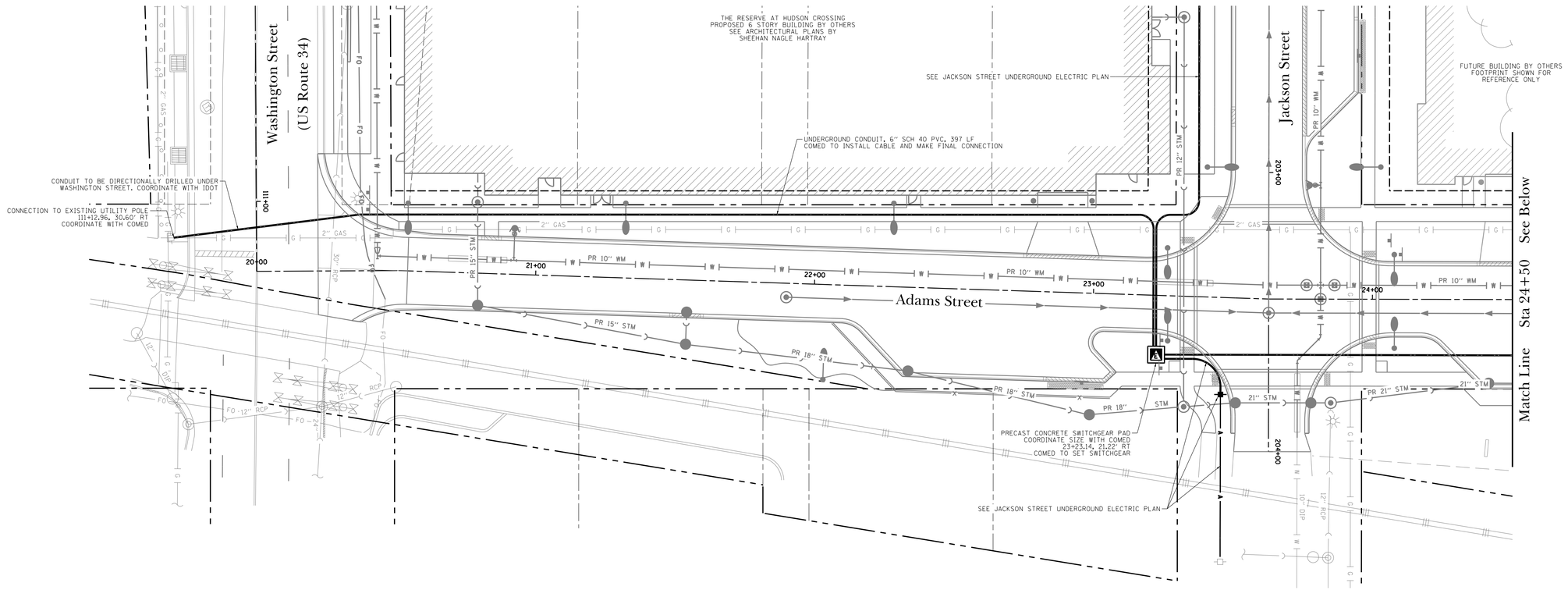

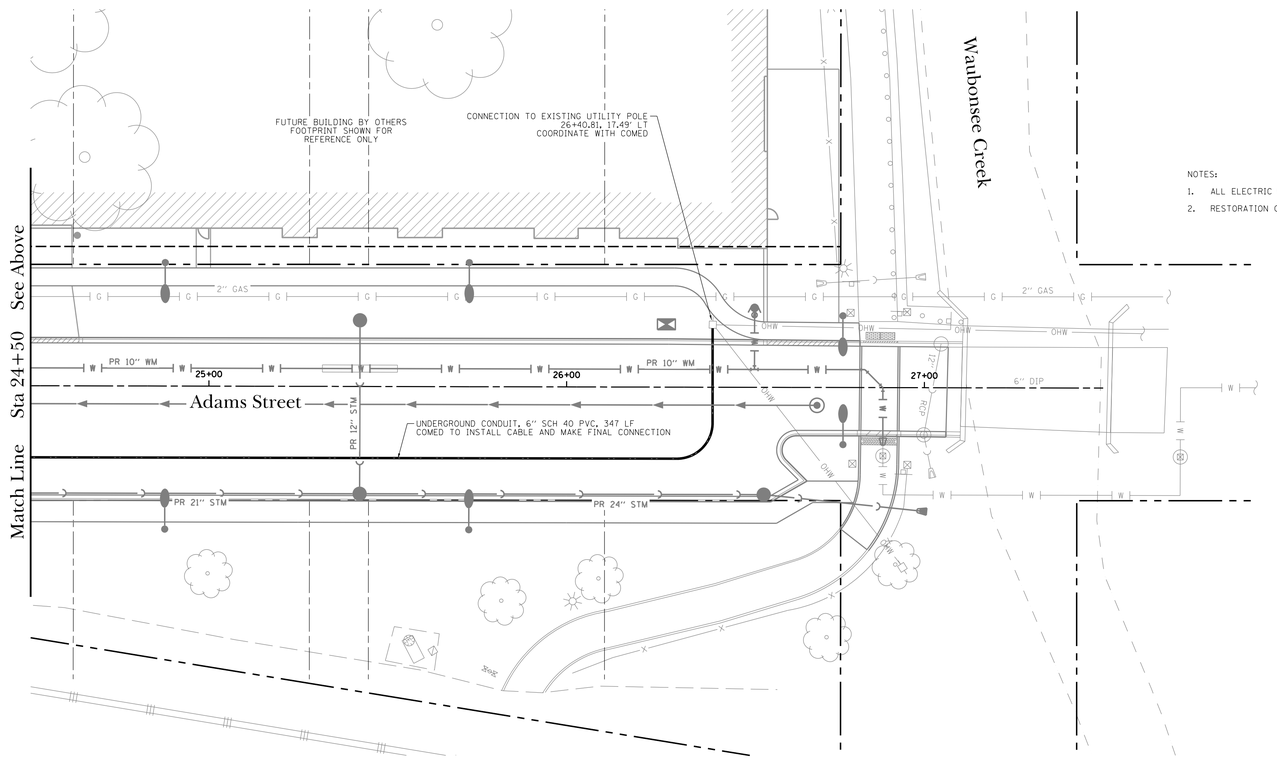

20 0 20 40
SCALE: 1" = 20' FEET

NOTES:

1. ALL ELECTRIC WORK SHALL BE CONSTRUCTED IN ACCORDANCE WITH COMED REQUIREMENTS.
2. RESTORATION OUTSIDE LIMITS OF ROADWAY IMPROVEMENTS SHALL BE INCIDENTAL TO THE CONTRACT.

ISSUE	REVISIONS	DATE
5.	ISSUED FOR BIDDING	2/21/19
4.	PER VILLAGE OF OSWEGO, IDOT, FOX METRO	2/15/19
3.	REVISIONS PER VILLAGE OF OSWEGO REVIEW	1/11/19
2.	REVISIONS PER VILLAGE OF OSWEGO REVIEW	12/4/18
1.	REVISIONS PER VILLAGE OF OSWEGO REVIEW	11/21/18

PROJECT STAFF
PROJECT MANAGER:
ENGINEER:
ENGINEER:
ENGINEER:
TECHNICIAN:
TECHNICIAN:

TROTTER ASSOCIATES, INC.
ENGINEERS AND SURVEYORS
400 N. Van Buren Road, Suite D
Oswego, Illinois 60543
Ph. 630-587-0170 • Fax 630-587-0175

The Reserve at Hudson Crossing - Roadway Improvements

Underground Electric Plan - Adams Street

Oswego, Kendall County, Illinois

Project No.: SH0002
File Name: 64_ELEC_ADAMS.dgn
Issue Date: 2/21/2019
Scale: 1" = 20'
Sheet Number
64

LIGHTING GENERAL NOTES

1. THE EXACT LOCATIONS OF ALL UTILITIES SHALL BE VERIFIED BY THE CONTRACTOR BEFORE THE INSTALLATION OF ANY EQUIPMENT. FOR THE LOCATIONS OF THE UTILITIES, CALL JULIE TOLL FREE AT (800) 892-0123.
2. BEFORE INSTALLING LIGHT STANDARDS NEAR OVERHEAD AND UNDERGROUND ELECTRIC UTILITIES CONTRACTOR SHALL CALL COM ED FOR LOCATION APPROVAL AND MINIMUM CLEARANCE REQUIREMENTS.
3. THE CONTRACTOR SHALL BE SOLELY RESPONSIBLE FOR JOB SITE SAFETY AS WELL AS SUPERVISION/ DIRECTION AND MEANS/METHODS OF CONSTRUCTION.
4. ALL WORK SHALL BE IN ACCORDANCE WITH THE LATEST EDITION OF THE FOLLOWING SPECIFICATIONS, WHICH ARE HEREBY MADE A PART HEREOF:
   - A. "STANDARD SPECIFICATIONS FOR ROAD AND BRIDGE CONSTRUCTION", AS PREPARED BY IDOT.
   - B. "THE NATIONAL ELECTRICAL CODE".
   - C. MUNICIPAL CODES & STANDARDS.
   - D. COMED STANDARDS
5. NO MATERIALS SHALL BE DELIVERED TO THE JOB SITE UNTIL ALL PERTINENT EQUIPMENT SUBMITTALS HAVE BEEN REVIEWED BY THE ENGINEER.
6. ALL UNDERGROUND WIRING SHALL BE XLP TYPE-USE, EXTRA ABRASION RESISTANCE, 600 VOLTS, BURIED A MINIMUM 30 INCHES BELOW FINISHED GRADE, FOLLOWING THE ROADWAY OR SIDEWALK EDGE. CONDUIT FOR LIGHTING AND POWER SHALL BE BLACK SCH 40 HDPE. CONDUIT FOR FIBER OPTIC SHALL BE ORANGE SCH 40 HDPE. ALL EMPTY CONDUITS SHALL HAVE A LOCATABLE / TONEABLE PULL STRING TAPE.
7. NO POLES SHALL BE ERECTED UNTIL THE RESPECTIVE FOUNDATIONS HAVE CURED, (IF APPLICABLE) AND HAVE BEEN REVIEWED BY THE ENGINEER.
8. TO MAINTAIN THE STRUCTURAL INTEGRITY OF LIGHT POLES WITH MAST ARMS, THEY SHALL NOT BE ERECTED AND LEFT TO STAND WITHOUT LUMINAIRES.
9. ALL POLE HANDHOLES SHALL FACE AWAY FROM TRAFFIC.
10. THE CONTRACTOR SHALL BE RESPONSIBLE FOR THE ESTABLISHMENT OF THE TOP OF FOUNDATION ELEVATION WITH THE FINISHED GRADE.
11. THE ELECTRICAL CONTRACTOR SHALL FURNISH TWO SETS OF FULL SIZE RECORD DRAWINGS TO THE ENGINEER UPON COMPLETION OF THE LIGHTING AND ELECTRICAL IMPROVEMENTS. THE DRAWINGS SHALL SHOW THE INSTALLED LOCATIONS OF ALL LIGHT POLES, UNDERGROUND CONDUITS/WIRING, HANDHOLES, JUNCTION BOXES & CONTROLLER CABINETS. THE DRAWINGS WILL BE REVIEWED BY THE ENGINEER.
12. UPON COMPLETION OF THE PROPOSED LIGHTING IMPROVEMENTS, THE CONTRACTOR SHALL PERFORM ELECTRICAL TESTING AND VERIFY THAT THE INSTALLATION COMPLIES WITH THE LATEST EDITION OF THE STANDARD SPECIFICATIONS FOR ROAD AND BRIDGE CONSTRUCTION IN ILLINOIS.
13. THE CONTRACTOR SHALL BE RESPONSIBLE FOR TIMELY NOTIFICATION AND ALL COORDINATION WITH COM ED FOR NEW ELECTRIC SERVICE TO THE PROPOSED LIGHTING CONTROLLERS.
14. THE CONTRACTOR SHALL LABEL ALL WIRES WITH WIRE MARKERS INDICATING THE CIRCUIT ID IN EVERY CONTROLLER, POLE BASE, HAND HOLE AND SPLICE/CONNECTION POINT. WIRE MARKERS SHALL BE WHITE NYLON WITH INTEGRAL MECHANICAL FASTENER WITH MINIMUM ¾" X 1" WRITEABLE AREA.
15. THERE ARE LOCATIONS THROUGHOUT THE PROJECT WHERE EXISTING UNDERGROUND UTILITIES ARE WITHIN CLOSE PROXIMITY TO THE PROPOSED LIGHT POLE FOUNDATIONS. CONTRACTOR SHALL LOCATE THE EDGE OF THE UTILITY IN THESE LOCATIONS AS DIRECTED BY THE ENGINEER USING THE HYDRO EXCAVATION METHOD (SEE SPECIAL PROVISION FOR "EXPLORATION EXCAVATION (UTILITY)").
16. ONE DIRECTION OF TRAFFIC IS PROPOSED TO REMAIN OPEN AT ALL TIMES. CONTRACTOR SHALL ENSURE THAT ALL EXISTING LIGHTING REMAINS OPERATIONAL UNTIL PROPOSED LIGHTING IS INSTALLED AND OPERATIONAL.
17. THE CONTRACTOR SHALL USE A STANDARD FOUNDATION WHENEVER POSSIBLE. WHEN UTILITY CONFLICT PROHIBITS USE OF STANDARD FOUNDATION THE CONTRACTOR MAY USE AN OFFSET FOUNDATION AT THE DIRECTION OF THE ENGINEER.

BILL OF MATERIALS (TOTAL)

DESCRIPTION	UNIT	QUANTITY
TRENCH BACKFILL	CU YD	60
ELECTRIC SERVICE INSTALLATION	EACH	2
UNDERGROUND CONDUIT, GALVANIZED STEEL, 2 1/2" DIA.	FOOT	300
UNDERGORUND CONDUIT, GALVANIZED STEEL, 4" DIA.	FOOT	110
UNDERGROUND CONDUIT, COILABLE NONMETALLIC CONDUIT, 3/4" DIA.	FOOT	350
UNDERGROUND CONDUIT, COILABLE NONMETALLIC CONDUIT, 1 1/4" DIA.	FOOT	4000
UNDERGROUND CONDUIT, COILABLE NONMETALLIC CONDUIT, 1 1/2" DIA.	FOOT	700
UNDERGROUND CONDUIT, COILABLE NONMETALLIC CONDUIT, 2" DIA.	FOOT	525
UNDERGROUND CONDUIT, COILABLE NONMETALLIC CONDUIT, 4" DIA.	FOOT	100
ELECTRIC CABLE IN CONDUIT, 600V(XLP-TYPE USE) 1/C NO. 10	FOOT	3850
ELECTRIC CABLE IN CONDUIT, 600V(XLP-TYPE USE) 1/C NO. 8	FOOT	4200
ELECTRIC CABLE IN CONDUIT, 600V(XLP-TYPE USE) 1/C NO. 6	FOOT	15150
ELECTRIC CABLE IN CONDUIT, 600V(XLP-TYPE USE) 1/C NO. 4	FOOT	2750
ELECTRIC CABLE IN CONDUIT, 600V(XLP-TYPE USE) 1/C NO. 3/0	FOOT	630
LIGHTING CONTROLLER, BASE MOUNTED, 240 VOLT, 200 AMP	EACH	2
LIGHT POLE FOUNDATION, 24" DIAMETER	FOOT	350
REMOVAL OF LIGHTING UNIT, SALVAGE	EACH	17
REMOVAL OF POLE FOUNDATION	EACH	11
• RELOCATE EXISTING LIGHTING UNIT	EACH	3
• REMOVAL OF LIGHTING CONTROLLER	EACH	1
• REMOVAL OF ELECTRIC SERVICE INSTALLATION	EACH	1
• REMOVAL OF LIGHTING CONTROLLER FOUNDATION	EACH	1
• REMOVE EXISTING HANDHOLE	EACH	1
• OUTLET SPECIAL	EACH	3
• REMOVE EXISTING CABLE	FOOT	1000
• GFCI 20 AMP DUPLEX RECEPTACLE	EACH	4
• LIGHTING STANDARD, TYPE 1	EACH	29
• LIGHTING STANDARD, TYPE 2	EACH	6
• REMOVAL OF LIGHTING LUMINAIRE, SALVAGE	EACH	2
• LUMINAIRE, LED, SPECIAL	EACH	37
• HANDHOLE, COMPOSITE CONCRETE (SPECIAL)	EACH	10
• LIGHT POLE FOUNDATION, 24" DIAMETER, OFFSET	FOOT	60
• EXPLORATION EXCAVATION (UTILITY)	FOOT	120
• MAINTENANCE OF LIGHTING SYSTEM	CAL MO	9

• SEE SPECIAL PROVISION

LEGEND

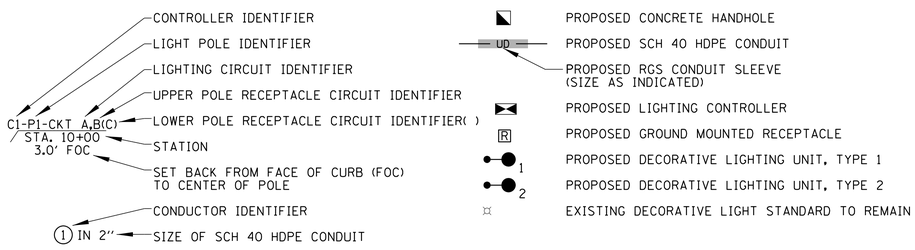

CAUTION
NOTICE TO CONTRACTOR

THE CONTRACTOR IS SPECIFICALLY CAUTIONED THE LOCATION AND/OR ELEVATION OF EXISTING AND PROPOSED UTILITIES AS SHOWN ON THESE PLANS. THE INFORMATION IS NOT TO BE RELIED ON AS BEING EXACT OR COMPLETE. THE CONTRACTOR MUST CALL THE LOCAL UTILITY LOCATION CENTER AT LEAST 72 HOURS BEFORE ANY EXCAVATION TO REQUEST EXACT FIELD LOCATIONS OF THE UTILITIES. IT SHALL BE THE RESPONSIBILITY OF THE CONTRACTOR TO INFORM ENGINEER OF ANY EXISTING UTILITIES WHICH CONFLICT WITH THE PROPOSED IMPROVEMENTS.

ABBREVIATIONS

A	AMPS
BOC	BACK OF CURB
CKT	CIRCUIT
DIA	DIAMETER
EOP	EDGE OF PAVEMENT
FT	FOOT
FOC	FACE OF CURB
FOS	FACE OF SIDEWALK
GND	GROUND
HD	HEAVY DUTY
HDPE	HIGH DENSITY POLYETHYLENE
HH	HAND HOLE
HPS	HIGH PRESSURE SODIUM
PVC	POLYVINYL CHLORIDE
RGS	RIGID GALVANIZED STEEL
ROW	RIGHT OF WAY
STA	STATION
V	VOLTS
W	WATTS

THE VILLAGE OF OSWEGO WILL OWN AND MAINTAIN THE PROPOSED LIGHTING SYSTEM.

CHRISTOPHER B. BURKE ENGINEERING, LTD.
9575 W. Higgins Road, Suite 600
Rosemont, Illinois 60018
(847) 823-0500

PROJECT STAFF
PROJECT MANAGER: •
ENGINEER: •
ENGINEER: •
ENGINEER: •
ENGINEER: •
TECHNICIAN: •
TECHNICIAN:

TROTTER ASSOCIATES, INC.
ENGINEERS AND SURVEYORS
40W201 Wilson Road, Suite D
Geneva, Illinois 60134
Ph: 630-587-0470 • Fax: 630-587-0475

The Reserve at Hudson Crossing – Lighting Plan

Oswego, Kendall County, Illinois

Project No.: SH0002
File Name:
Issue Date: 2/20/2019
Scale: N.T.S.
Sheet Number
65

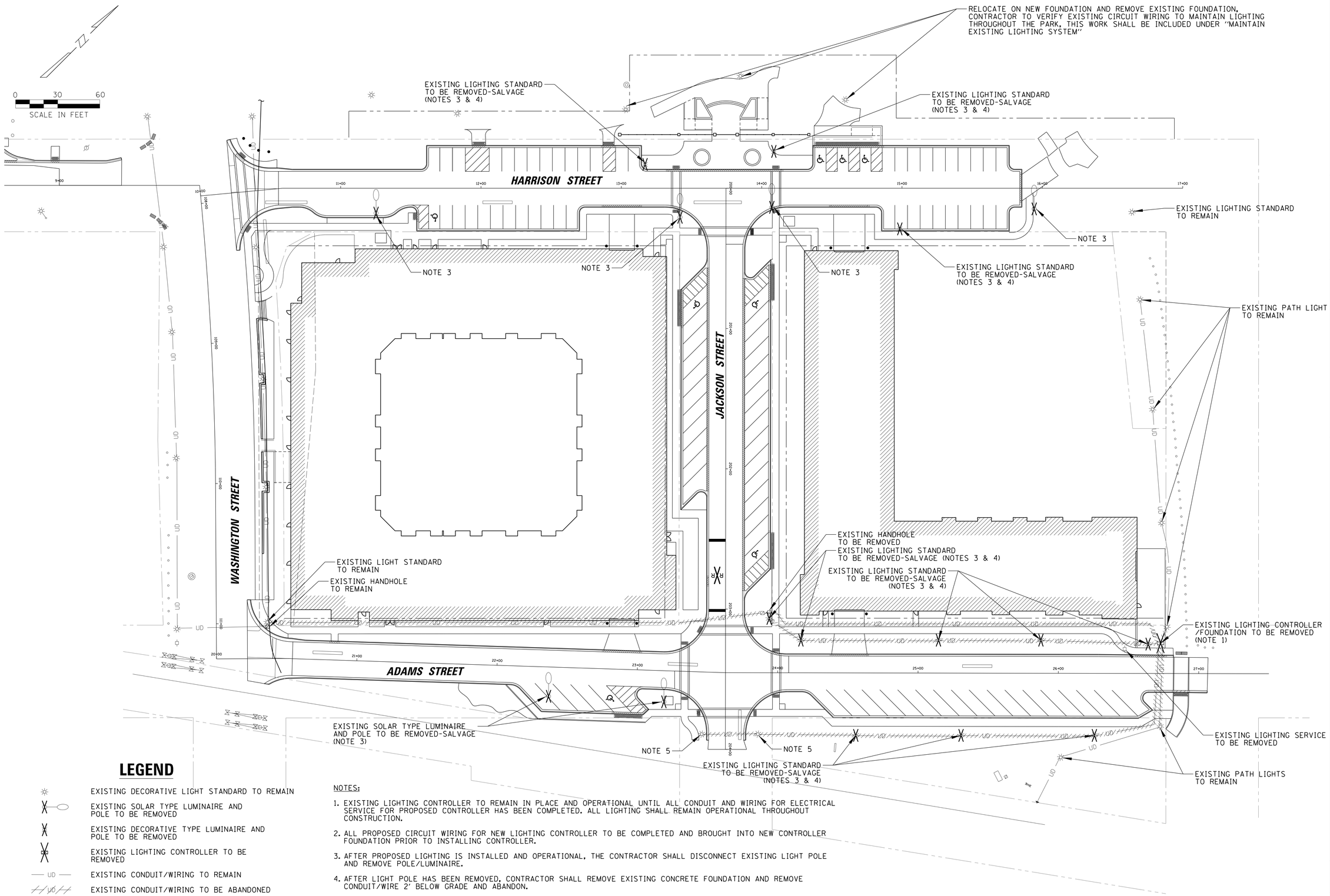

LEGEND

- EXISTING DECORATIVE LIGHT STANDARD TO REMAIN
- EXISTING SOLAR TYPE LUMINAIRE AND POLE TO BE REMOVED
- EXISTING DECORATIVE TYPE LUMINAIRE AND POLE TO BE REMOVED
- EXISTING LIGHTING CONTROLLER TO BE REMOVED
- UD — EXISTING CONDUIT/WIRING TO REMAIN
- UD — EXISTING CONDUIT/WIRING TO BE ABANDONED

NOTES:

1. EXISTING LIGHTING CONTROLLER TO REMAIN IN PLACE AND OPERATIONAL UNTIL ALL CONDUIT AND WIRING FOR ELECTRICAL SERVICE FOR PROPOSED CONTROLLER HAS BEEN COMPLETED. ALL LIGHTING SHALL REMAIN OPERATIONAL THROUGHOUT CONSTRUCTION.
2. ALL PROPOSED CIRCUIT WIRING FOR NEW LIGHTING CONTROLLER TO BE COMPLETED AND BROUGHT INTO NEW CONTROLLER FOUNDATION PRIOR TO INSTALLING CONTROLLER.
3. AFTER PROPOSED LIGHTING IS INSTALLED AND OPERATIONAL, THE CONTRACTOR SHALL DISCONNECT EXISTING LIGHT POLE AND REMOVE POLE/LUMINAIRE.
4. AFTER LIGHT POLE HAS BEEN REMOVED, CONTRACTOR SHALL REMOVE EXISTING CONCRETE FOUNDATION AND REMOVE CONDUIT/WIRE 2' BELOW GRADE AND ABANDON.
5. REMOVE EXISTING LUMINAIRE, REPLACE WITH NEW LED LUMINAIRE.

CHRISTOPHER B. BURKE ENGINEERING, LTD.
9575 W. Higgins Road, Suite 600
Rosemont, Illinois 60018
(847) 823-0500

PROJECT STAFF
PROJECT MANAGER:
ENGINEER:
ENGINEER:
ENGINEER:
ENGINEER:
TECHNICIAN:
TECHNICIAN:

TROTTER ASSOCIATES, INC.
ENGINEERS AND SURVEYORS
409W20 Nauer Road, Suite D
Naperville, Illinois 60563
Ph.: 630-587-0470 • Fax: 630-587-0475

The Reserve at Hudson Crossing – Lighting Removal Plan

Oswego, Kendall County, Illinois

Project No.: SH0002

File Name:

Issue Date: 2/15/2019

Scale: 1" = 30'

Sheet Number

66

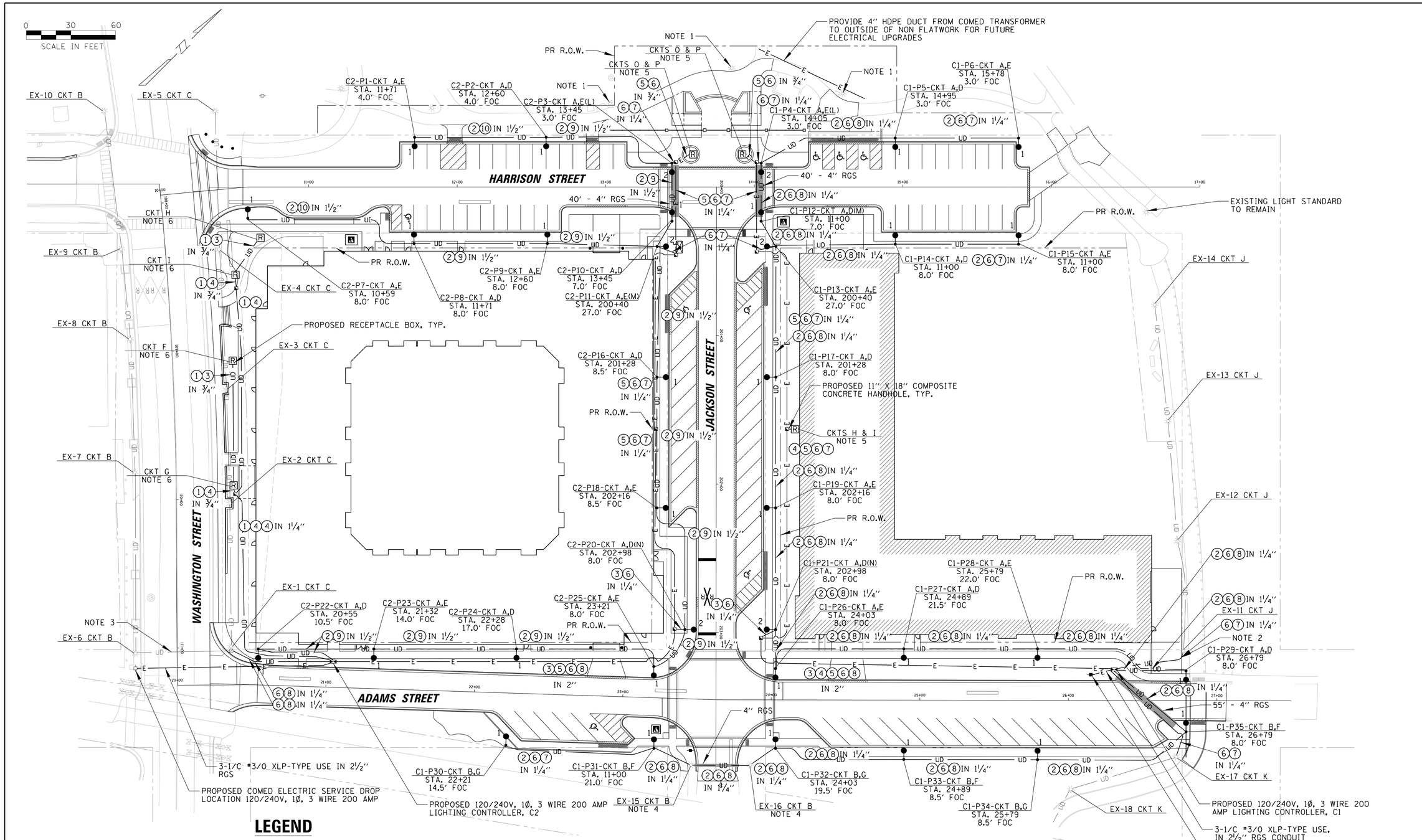

LEGEND

- CONTROLLER IDENTIFIER
- LIGHT POLE IDENTIFIER
- LIGHTING CIRCUIT IDENTIFIER
- UPPER POLE RECEPTACLE CIRCUIT IDENTIFIER
- LOWER POLE RECEPTACLE CIRCUIT IDENTIFIER( )
- STATION
- SET BACK FROM FACE OF CURB (FOC) TO CENTER OF POLE
- CONDUCTOR IDENTIFIER
- SIZE OF SCH 40 HDPE CONDUIT

C1-P1-CKT A,B(C) / STA. 10+00 3.0' FOC

(1) IN 2"

- PROPOSED CONCRETE HANDHOLE
- PROPOSED SCH 40 HDPE CONDUIT
- PROPOSED RGS CONDUIT SLEEVE (SIZE AS INDICATED)
- PROPOSED LIGHTING CONTROLLER
- PROPOSED GROUND MOUNTED RECEPTACLE
- PROPOSED DECORATIVE LIGHTING UNIT, TYPE 1
- PROPOSED DECORATIVE LIGHTING UNIT, TYPE 2
- EXISTING DECORATIVE LIGHT STANDARD TO REMAIN

CONDUCTOR SCHEDULE

(1)	1/C #10 GND	(6)	1/C #6 GND
(2)	2/C #10	(7)	1/C #6 & 1/C #6 N
(3)	1/C #10 & 1/C #10 N	(8)	2/C #6 & 1/C #6 N
(4)	2/C #10 & 1/C #10 N	(9)	2/C #4, 1/C #4 N & 1/C #4 GND
(5)	2/C #8 & 1/C #8 N	(10)	1/C #4, 1/C #4 N & 1/C #4 GND

NOTES:

1. RELOCATE EXISTING LIGHTING UNIT. CONTRACTOR TO COORDINATE LOCATION (SEE SPECIAL PROVISION FOR "RELOCATE EXISTING LIGHTING UNIT").
2. CONNECT PROPOSED CONDUIT TO EXISTING PATH LIGHTING CONDUIT. INSTALL NEW SPAN OF WIRING FROM EXISTING POLE TO PROPOSED CONTROLLER.
3. CONNECT PROPOSED CONDUITS TO EXISTING CONDUITS IN EXISTING HANDHOLE.
4. INSTALL NEW LED LUMINAIRE ON EXISTING LIGHT POLE.
5. QUAD RECEPTACLE SEE DETAIL.
6. DUPLEX RECEPTACLE SEE DETAIL.

CHRISTOPHER B. BURKE ENGINEERING, LTD.
9575 W. Higgins Road, Suite 600
Rosemont, Illinois 60018
(847) 823-0500

PROJECT STAFF

PROJECT MANAGER:	
ENGINEER:	
ENGINEER:	
ENGINEER:	
TECHNICIAN:	
TECHNICIAN:	

TROTTER ASSOCIATES, INC.
ENGINEERS AND SURVEYORS
409/201 Venture Boulevard, Suite D
Naperville, Illinois 60563
Ph. 630-587-0470 • Fax: 630-587-0475

The Reserve at Hudson Crossing – Lighting Plan

Oswego, Kendall County, Illinois

Project No.: SH0002

File Name:

Issue Date: 2/15/2019

Scale: 1" = 30'

Sheet Number

ITEM	SPECIFICATION
(1) MAIN CIRCUIT BREAKER (NOTE 2)	200 AMPERE, 2P, 240V RATING, 22KAIC, THERMAL MAGNETIC MOLDED CASE
(2) MANUAL ON-OFF SWITCH FOR PARKING LOT LIGHTS	20A, 2 POS SELECTOR TYPE, MTD IN LOCKABLE POLICE DOOR LABELED " PARKING LOT LIGHTS", "ON", "OFF"
(3) GROUND & NEUTRAL BUS	COPPER NEUTRAL BUS- MINIMUM 16 TERMINANATIONS (#1/0-#10), & COPPER GROUND BUS - MINIMUM 16 TERMINATIONS (#1/0-#10). BUSSES SHALL BE HORIZONTAL LOCATED AT BASE OF CABINET
(4) AUXILIARY RELAYS	(3) -30 AMPERE, 120 V OPERATED DPDT 60 HZ COIL, 2 NO & 2 NC CONTACTS PLUG-IN TYPE, PANEL MOUNTED
(5) CABINET RECEPTACLE AND BOX	COMMERCIAL GRADE GFCI 20A/120V, MOUNTED IN A WEATHERPROOF DIE CAST ALUMINUM SINGLE GANG BOX WITH WEATHERPROOF FLAPPER TYPE COVER
(6) LED CABINET LIGHT AND BOX	DIECAST ALUMINUM BOX AND CAGE, WITH VAPORPROOF FROSTED GLASS GLOBE, EXTERIOR GRADE 120V - 13W LED, WALL MOUNT, 4000K
(7) LIGHTING CONTACTORS	(3) 30 AMPERE, 8 POLE, 120 VOLT COIL, MECH HELD, OPEN TYPE
(8) LIGHTING PANELBOARD LP-1	120/240V-1Ø-225A MAIN LUG ONLY, 30 SPACE, 22KAIC, INTERIOR ONLY W/O ENCLOSURE, COPPER BUS, BOLT ON BREAKERS (SEE SCHEDULE)
(9) POWER DISTRIBUTION BLOCK	600 VOLT, INSULATED, SIZE AS REQUIRED
(10) SERVICE CABLES	3-600V (XLP-TYPE USE) NO. 3/0 AWG
(11) LAMPHOLDER/RECEPTACLE WIRE	600V MTW NO. 12, MARKED WITH BRADY MARKERS
(12) CONTROL/PHOTOCELL WIRE	600V MTW NO. 12, MARKED WITH BRADY MARKERS
(13) SURGE ARRESTOR	36 K AMPERE RATING PER PHASE
(14) BACKBOARD	1/2" THICK, SOLID PHENOLIC LAMINATE
(15) DOOR SWITCH	20 AMPERE, 120 VOLT, MOUNTED IN DOOR, SNAP ACTION TYPE, PLUNGER SWITCH,
(16) HAND-AUTO-OFF SWITCHES	(3) 20A, 3 POS. SELECTOR TYPE, MTD IN 2-GANG DIE CAST ALUM. BOX
(17) PHOTOCELL TERMINAL BLOCK	3 TERMINAL, SCREW TYPE, #14-#10 WIRE SIZE RANGE, REMOTE PHOTOCELL
(18) TERMINAL BLOCKS	30 AMPERE, 240V, 30 CKTS, #12-#1/0 AWG, INSULATED, CKTS LABELED, BLOCKS INSTALLED HORIZONTAL LOCATED AT BASE OF CABINET
(19) PHOTOCELL	120V, MTD ON CABINET, DELAY TYPE, SPST-NC

NOTES:
1. THE LIGHTING CONTROLLER TOGETHER WITH ALL OF ITS COMPONENTS SHALL BE UL LISTED AS AN "ENCLOSED INDUSTRIAL CONTROL PANEL" UNDER UL508A.
2. THE MAIN CIRCUIT BREAKER SHALL BE LABELED "SERVICE DISCONNECT".
3. ALL SWITCHES AND CONTROLS SHALL BE IDENTIFIED USING TWO COLOR ENGRAVED NAMEPLATES.
4. THE PANEL MANUFACTURER SHALL LABEL THE CABINET WITH THE APPROPRIATE ARC FLASH WARNING AND PERSONNEL PROTECTION EQUIPMENT REQUIRED FOR SERVICING.
5. ALL EXPOSED BUS BARS SHALL BE INSULATED.
6. ALL WIRING SHALL BE COPPER.

ALL ITEMS LISTED IN LIGHTING CONTROLLER COMPONENT SCHEDULE SHALL BE CONSIDERED INCIDENTAL TO THE PRICE BID FOR "LIGHTING CONTROLLER, BASE MOUNTED, 240 VOLT, 200 AMP" INCLUDING CABINET, METER FITTING, FOUNDATION AND GROUNDING.

LIGHTING CONTROLLER LC1 & LC2 COMPONENT SCHEDULE

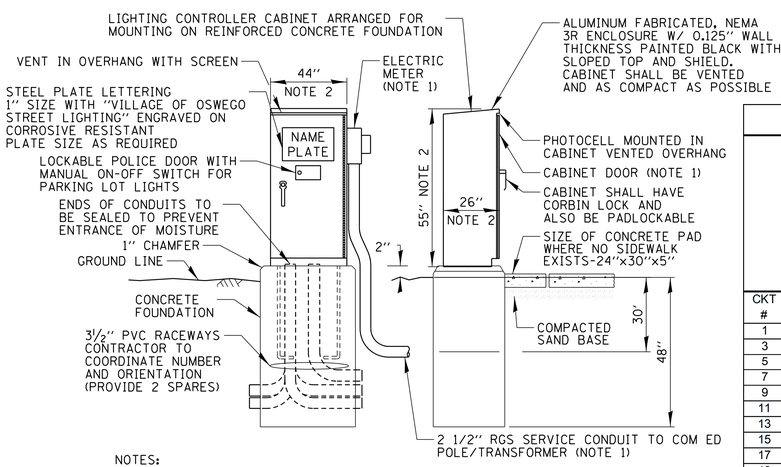

NOTES:
1. SEE DETAIL THIS SHEET FOR CABINET METER FITTING & DOOR ORIENTATION.
2. CABINET DIMENSIONS SHOWN ARE APPROXIMATE, CABINET SHALL BE AS COMPACT AS POSSIBLE. CONTRACTOR TO COORDINATE.

LIGHTING CONTROLLER LC1 & LC2 CABINET AND FOUNDATION

N.T.S.

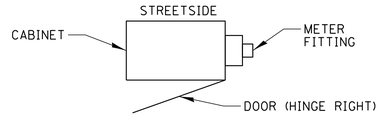

CABINET METER FITTING & DOOR ORIENTATION

N.T.S.

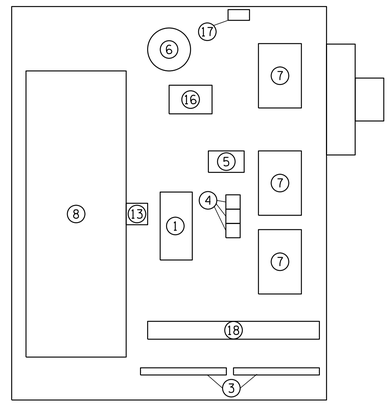

CABINET EQUIPMENT LAYOUT

N.T.S.

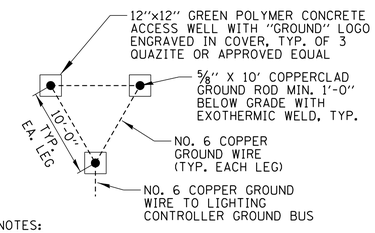

NOTES:
1. ACCESS WELLS SHALL BE INCLUDED IN THE LIGHTING CONTROLLER PAY ITEM.

GROUND FIELD DETAIL (TYP.)

N.T.S.

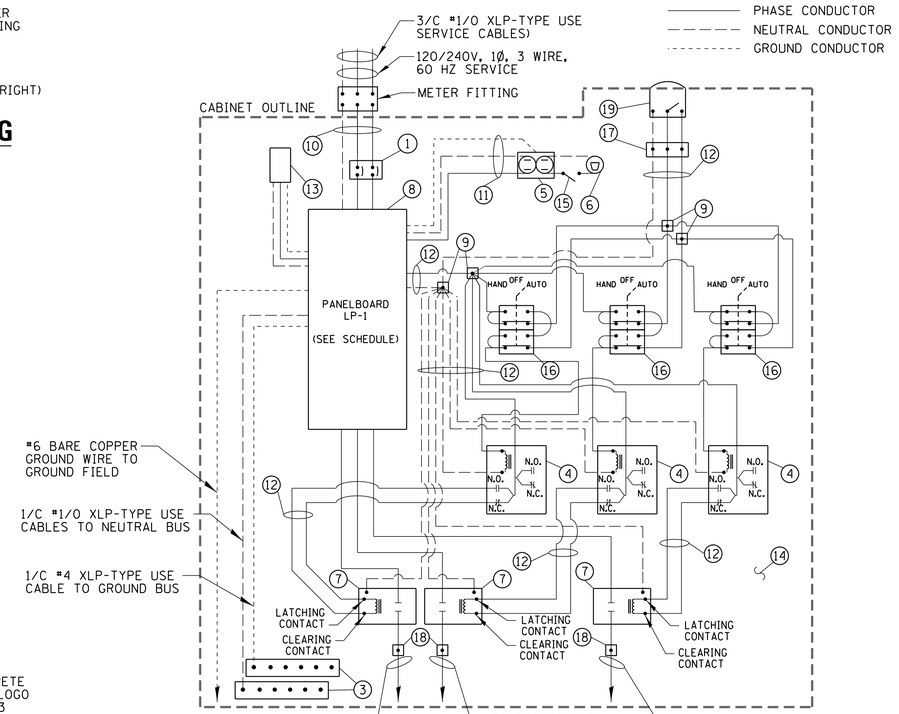

LIGHTING CONTROLLER LC1 & LC2 WIRING DIAGRAM

N.T.S.

LC-1 PANELBOARD SCHEDULE

FED FROM: MAIN BREAKER
VOLTAGE: 120/240V, 1 PH, 3W
BUS SIZE: 225A-COPPER
MAINS: MAIN LUG ONLY
SPACES: 30
SHORT CKT RATING: 22KAIC
BONDING JUMPER: YES
MOUNTING: SURFACE

TOT. 'A' PHASE: 11720 VA
TOT. 'B' PHASE: 10750 VA
TOTAL 'A' + 'B' : 22470 VA
TOTAL AMPS: 93.6 A

CKT #	CB/ POLES	DESCRIPTION	A PH VA	B PH VA	A PH VA	B PH VA	DESCRIPTION	CB/ POLES	CKT #
1	20A-2P	A - N. JACKSON LIGHTS	560		820		J - W. PATH LIGHTS	20A-1P	2
3				560		1230	K - E. PATH LIGHTS	20A-1P	4
5	20A-2P	B - E. ADAMS LIGHTS	320		1920		L - N. JACKSON BOT RECPT	20A-2P	6
7				320		1920	M - N. JACKSON BOT RECPT		8
9	20A-2P	C - SPARE	0		1920		N - N. JACKSON GND RECPT	20A-1P	10
11				0		960	O - W. HARRIS. GND RECPT	20A-2P	12
13	30A-2P	D - N. JACKSON TOP RECPT	2520		960		P - W. HARRIS. GND RECPT		14
15		E - N. JACKSON TOP RECPT		2520		0	SPARE	20A-1P	16
17	20A-2P	F - E. ADAMS. TOP RECPT	1440		0		SPARE	20A-2P	18
19		G - E. ADAMS. TOP RECPT		1440		0			20
21	20A-2P	H - N. JACKSON GND RECPT	1200		0		SPACE		22
23		I - N. JACKSON GND RECPT		1200		0	SPACE		24
25		SPACE	0		10		SURGE PROTECTOR		26
27		SPACE		0		600	CABINET LIGHT/RECEP.		28
29		SPACE			50		CONTROLS		30
		SUBTOTALS:	6040	6040	5680	4710			

NOTE: ALL CIRCUIT BREAKERS SHALL BE BOLT ON TYPE

LC–1 PANELBOARD SCHEDULE

LC-2 PANELBOARD SCHEDULE

FED FROM: MAIN BREAKER
VOLTAGE: 120/240V, 1 PH, 3W
BUS SIZE: 225A-COPPER
MAINS: MAIN LUG ONLY
SPACES: 30
SHORT CKT RATING: 22KAIC
BONDING JUMPER: YES
MOUNTING: SURFACE

TOT. 'A' PHASE: 11050 VA
TOT. 'B' PHASE: 9310 VA
TOTAL 'A' + 'B' : 20360 VA
TOTAL AMPS: 84.8 A

CKT #	CB/ POLES	DESCRIPTION	A PH VA	B PH VA	A PH VA	B PH VA	DESCRIPTION	CB/ POLES	CKT #
1	20A-2P	A - S. JACKSON LIGHTS	600		0		J - SPARE	20A-1P	2
3				600		0	K - SPARE	20A-1P	4
5	20A-2P	B - S. WASHINGTON LIGHTS	515		1200		L - S. JACKSON BOT RECPT	20A-2P	6
7				515		1200	M - S. JACKSON BOT RECPT		8
9	20A-2P	C - N. WASHINGTON LIGHTS	515		1920		N - S. JACKSON GND RECPT	20A-1P	10
11				515		960	O - W. HARRIS. GND RECPT	20A-2P	12
13	30A-2P	D - S. JACKSON TOP RECPT	2880		960		P - W. HARRIS. GND RECPT		14
15		E - S. JACKSON TOP RECPT		2520		0	SPACE	20A-1P	16
17	20A-2P	F - N. WASH. GND RECPT	1200		0		SPARE	20A-2P	18
19		G - N. WASH. GND RECPT		1200		0			20
21	20A-2P	H - N. WASH. GND RECPT	1200		0		SPACE		22
23		I - N. WASH. GND RECPT		1200		0	SPACE		24
25		SPACE	0		10		SURGE PROTECTOR		26
27		SPACE		0		600	CABINET LIGHT/RECEP.		28
29		SPACE	0		50		CONTROLS		30
		SUBTOTALS:	6910	6550	4140	2760			

NOTE: ALL CIRCUIT BREAKERS SHALL BE BOLT ON TYPE

LC–2 PANELBOARD SCHEDULE

CHRISTOPHER B. BURKE ENGINEERING, LTD.
9575 W. Higgins Road, Suite 600
Rosemont, Illinois 60018
(847) 823-0500

PROJECT STAFF
PROJECT MANAGER:
ENGINEER:
ENGINEER:
ENGINEER:
ENGINEER:
TECHNICIAN:
TECHNICIAN:

TROTTER ASSOCIATES, INC.
ENGINEERS AND SURVEYORS
4N920 Dunton Road, Suite D
St. Charles, Illinois 60175
Ph. 630-587-0476 Fax: 630-587-0475

The Reserve at Hudson Crossing – Lighting Details

Oswego, Kendall County, Illinois

Project No.: SH0002
File Name:
Issue Date: 2/20/2019
Scale: N.T.S.
Sheet Number

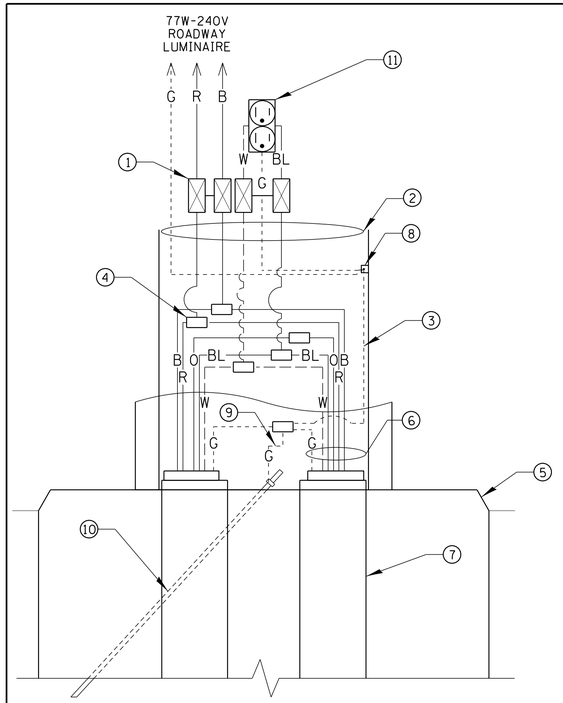

PHASE CONDUCTOR
GROUND CONDUCTOR
NEUTRAL CONDUCTOR

1. 5A FUSE FOR ROADWAY LUMINAIRE, &3A FUSE FOR UPPER RECEPTACLE (NEUTRAL SHALL BE NON-FUSED) 2-POLE BREAKAWAY FUSE HOLDER & INSULATING BOOTS
2. NO. 12 XLP-TYPE USE POLE WIRES TO LUMINAIRE & RECEPTACLE.
3. NO. 12 GROUND WIRE CONNECTED TO GROUND LUG IN LUMINAIRE
4. MULTIPLE COMPRESSION FITTINGS (SPLICE), TYP.
5. CONCRETE FOUNDATION
6. WIRES AS SHOWN ON PLANS
7. PROPOSED LIGHTING CONDUIT PULLED THROUGH PVC RACEWAY
8. POLE GROUND LUG, 1/4, 20 THREADED BOLT
9. NO. 6 GROUND WIRE MECHANICALLY CLAMPED TO GROUND ROD
10. GROUND ROD
11. 15A-120V GFCI RECEPTACLE (UPPER)

NOTE: POLE WIRING INSULATION COLORING TO MATCH BRANCH CIRCUIT WIRING
B=BLACK, R=RED, BL=BLUE, O=ORANGE, W=WHITE, G=GREEN

LIGHT POLE TYPE 1 HANDHOLE WIRING DIAGRAM

N.T.S.

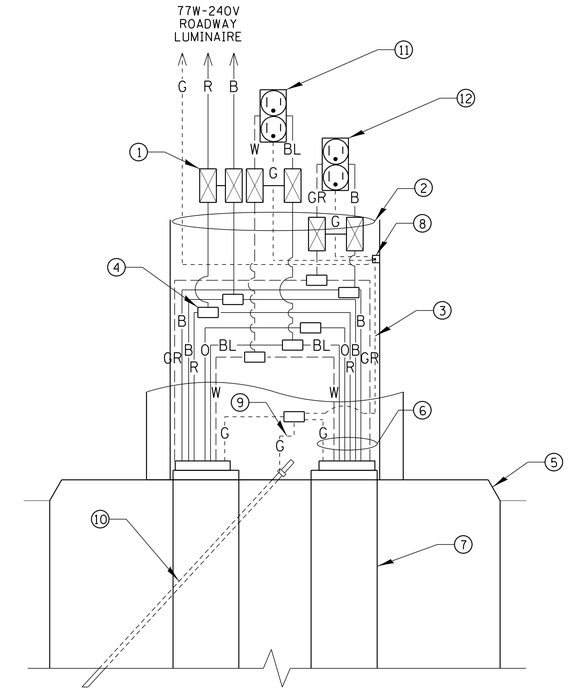

PHASE CONDUCTOR
GROUND CONDUCTOR
NEUTRAL CONDUCTOR

1. 5A FUSE FOR ROADWAY LUMINAIRE, &3A FUSE FOR UPPER RECEPTACLE, &20A FUSE FOR LOWER RECEPTACLE (NEUTRAL SHALL BE NON-FUSED) 2-POLE BREAKAWAY FUSE HOLDER & INSULATING BOOTS
2. NO. 12 XLP-TYPE USE POLE WIRES TO LUMINAIRE & RECEPTACLES.
3. NO. 12 GROUND WIRE CONNECTED TO GROUND LUG IN LUMINAIRE
4. MULTIPLE COMPRESSION FITTINGS (SPLICE), TYP.
5. CONCRETE FOUNDATION
6. WIRES AS SHOWN ON PLANS
7. PROPOSED LIGHTING CONDUIT PULLED THROUGH PVC RACEWAY
8. POLE GROUND LUG, 1/4, 20 THREADED BOLT
9. NO. 6 GROUND WIRE MECHANICALLY CLAMPED TO GROUND ROD
10. GROUND ROD
11. 20A-120V GFCI RECEPTACLE (UPPER)
12. 20A-120V GFCI RECEPTACLE (LOWER)

NOTE: POLE WIRING INSULATION COLORING TO MATCH BRANCH CIRCUIT WIRING
B=BLACK, R=RED, BL=BLUE, O=ORANGE, W=WHITE, G=GREEN
GR=GREY

LIGHT POLE TYPE 2 HANDHOLE WIRING DIAGRAM

N.T.S.

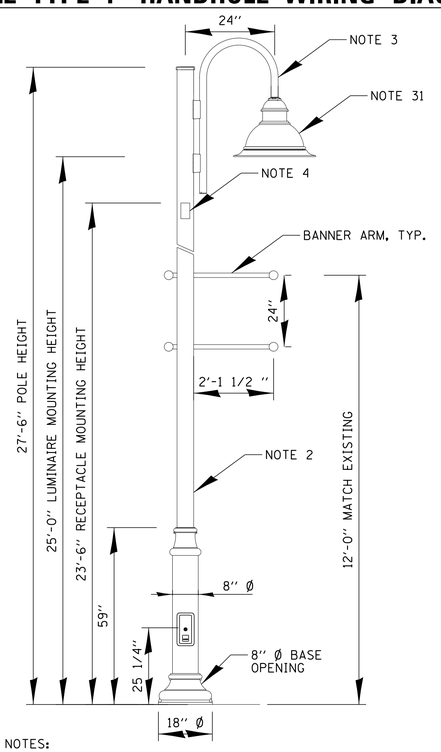

NOTES:

1. LUMEC MODEL #: DMS50-80W48LED4K-LE3F-240-DMG-BKTX
2. LUMEC MODEL #: RAS61V-27.5-BAS24(2)-CAP1-GFII-GFI21-VD-BKTX
3. LUMEC MODEL #: CN5-1A-R5@6-BKTX
4. 20A-120V GFI RECEPTACLE WITH ALUMINUM IN USE COVER TO MATCH POLE

LIGHT POLE DETAIL, TYPE 1

N.T.S.

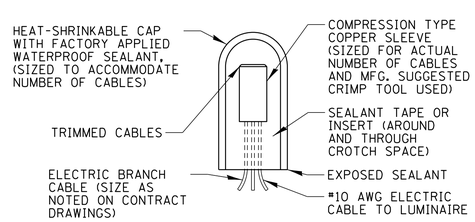

SPLICING ELECTRIC CABLE

N.T.S.

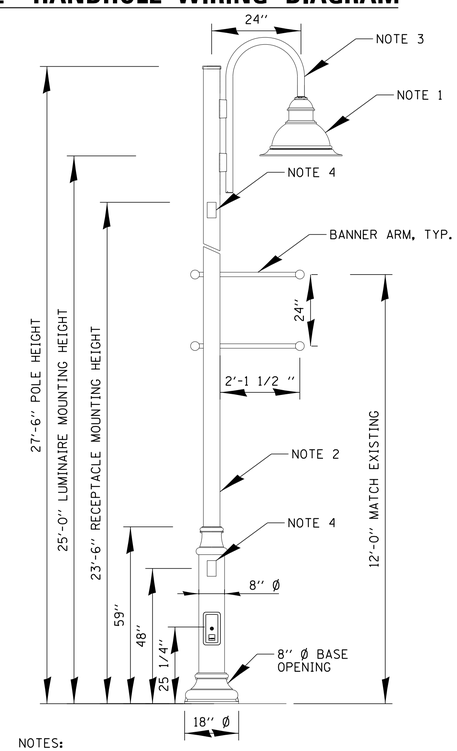

NOTES:

1. LUMEC MODEL #: DMS50-80W48LED4K-LE3F-240-DMG-BKTX
2. LUMEC MODEL #: RAS61V-27.5-BAS24(2)-CAP1-GFII-GFI21-VD-BKTX
3. LUMEC MODEL #: CN5-1A-R5@6-BKTX
4. 20A-120V GFI RECEPTACLE WITH ALUMINUM IN USE COVER TO MATCH POLE

LIGHT POLE DETAIL, TYPE 2

N.T.S.

CHRISTOPHER B. BURKE ENGINEERING, LTD.
9575 W. Higgins Road, Suite 600
Rosemont, Illinois 60018
(847) 823-0500

PROJECT STAFF
PROJECT MANAGER:
ENGINEER:
ENGINEER:
ENGINEER:
TECHNICIAN:
TECHNICIAN:

TROTTER ASSOCIATES, INC.
ENGINEERS AND SURVEYORS
40W200 Wilson Road, Suite D
Big Rock, Illinois 60511
Ph.: 630-587-0470 Fax: 630-587-0475

The Reserve at Hudson Crossing – Lighting Details

Oswego, Kendall County, Illinois

Project No.: SH0002
File Name:
Issue Date: 2/15/2019
Scale: N.T.S.
Sheet Number
69

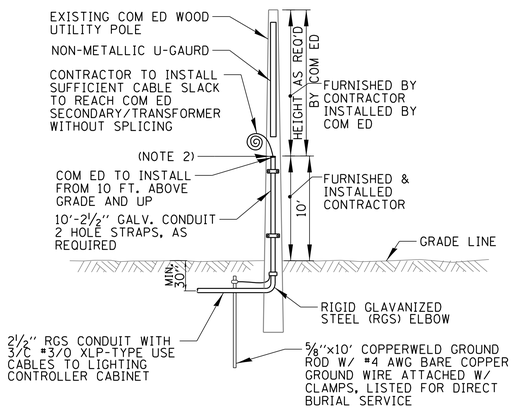

NOTES:

1. ALL WORK SHALL CONFORM TO COM ED'S BOOK OF "INFORMATION AND REQUIREMENTS FOR THE SUPPLY OF ELECTRIC SERVICE."
2. CONTRACTOR SHALL PROVIDE CONDUIT BUSHING AND SEALING COMPOUND AT TOP OF RISER.
3. ALL MATERIAL ABOVE (EXCEPT FOR POLE) SHALL BE INCLUDED IN THE PRICE BID FOR "ELECTRIC SERVICE INSTALLATION". THE HORIZONTAL SERVICE CONDUIT AND WIRING FROM POLE TO CONTROLLER SHALL BE PAID FOR SEPERATELY.

COM ED OVERHEAD CONNECTION POLE

N.T.S.

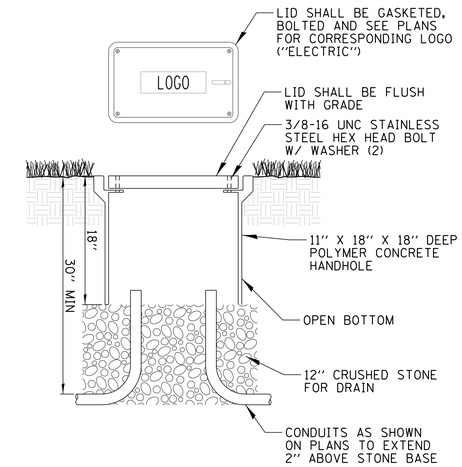

NOTES:

1. NO SPLICING IN HANDHOLE UNLESS OTHERWISE SHOWN. ALL SPLICES SHALL BE WATERPROOF (SEE SPLICING DETAIL).
2. POLYMER CONCRETE HANDHOLE AND LID SHALL BE GREEN IN LANDSCAPED AREAS AND MATCH COLOR IN CONCRETE/BRICK AREAS.
3. BOX & LID SHALL MEET/EXCEED ANSI TIER 15 LOADING REQUIREMENTS, AND BE TESTED IN ACCORDANCE WITH THE LATEST EDITION OF THE ANSI/SCTE 77 "SPECIFICATION FOR UNDERGROUND ENCLOSURE INTEGRITY", AND THE PROVISIONS OF PARAGRAPHS 5.2.3 AND 5.2.4 OF WESTERN UNDERGROUND COMMITTEE GUIDE 3.6.

COMPOSITE CONCRETE HANDHOLE

N.T.S.

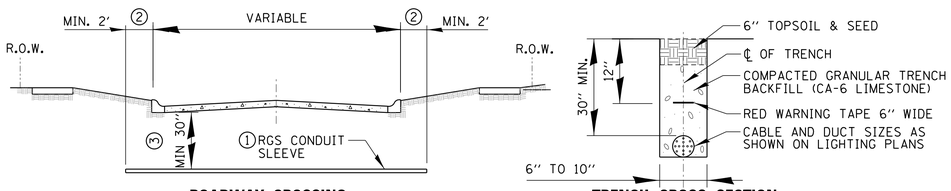

ROADWAY CROSSING **TRENCH CROSS SECTION**

① SLEEVE SHALL BE HEAVY WALL RIGID GALVANIZED STEEL (RGS) CONDUIT.

② SLEEVE SHALL EXTEND A MINIMUM OF 2 FT. BEYOND BACK OF CURB.

③ SLEEVE SHALL BE A MINIMUM OF 30" BELOW ROADWAY OR CURB BOTTOM.

ELECTRIC CONDUIT INSTALLATION

N.T.S.

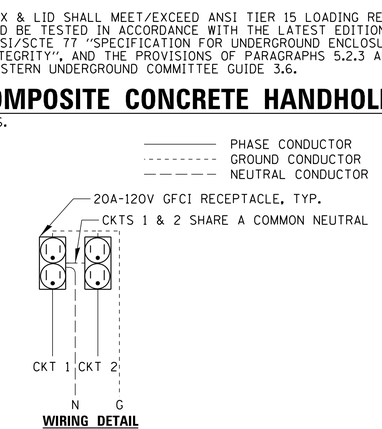

WIRING DETAIL

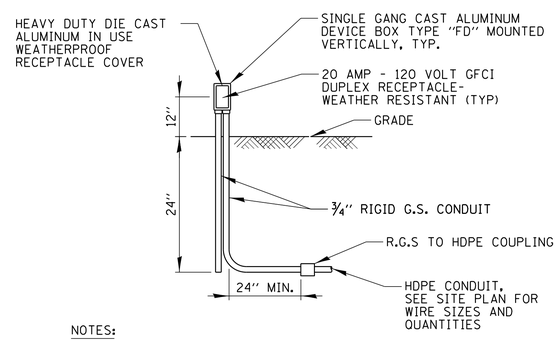

NOTES:

1. CONTRACTOR SHALL COORDINATE EXACT LOCATION, MOUNTING HEIGHT AND ORIENTATION OF EACH RECEPTACLE WITH OWNER.
2. END OF RUN RECEPTACLES SHALL BE STUBBED AND CAPPED WITH A VERTICAL 24" RGS CONDUIT INSTALLED FOR STABILITY (AS SHOWN)
3. PAID FOR UNDER "GFCI 20 AMP DUPLEX RECEPTACLE" (SEE SPECIAL PROVISION). THIS ITEM SHALL INCLUDE RECEPTACLE, DEVICE BOX/COVER, RIGID GALVANIZED STEEL CONDUIT & TRANSITION COUPLING. HDPE CONDUIT & WIRE PAID FOR SEPARATELY.
4. BOX, COVER & ABOVE GRADE CONDUITS SHALL BE PRIMED & PAINTED BLACK.
5. PROVIDE ADHESIVE LABEL INSIDE COVER TO READ " MAX LOAD 10A".

DUPLEX GROUND MOUNTED RECEPTACLE DETAIL

N.T.S.

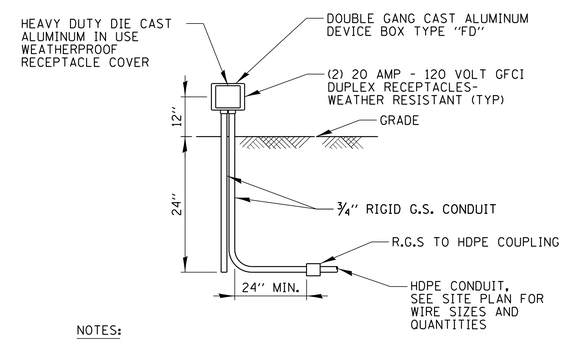

NOTES:

1. CONTRACTOR SHALL COORDINATE EXACT LOCATION, MOUNTING HEIGHT AND ORIENTATION OF EACH RECEPTACLE WITH OWNER.
2. END OF RUN RECEPTACLES SHALL BE STUBBED AND CAPPED WITH A VERTICAL 24" RGS CONDUIT INSTALLED FOR STABILITY (AS SHOWN)
3. PAID FOR UNDER "OUTLET SPECIAL" (SEE SPECIAL PROVISION). THIS PAY ITEM SHALL INCLUDE RECEPTACLE, DEVICE BOX/COVER, RIGID GALVANIZED STEEL CONDUIT & TRANSITION COUPLING. HDPE CONDUIT & WIRE PAID FOR SEPARATELY.
4. BOX, COVER & ABOVE GRADE CONDUITS SHALL BE PRIMED & PAINTED BLACK.
5. PROVIDE ADHESIVE LABEL INSIDE COVER TO READ "MAX LOAD 8A PER RECEPTACLE".

QUAD GROUND MOUNTED RECEPTACLE DETAIL

N.T.S.

CHRISTOPHER B. BURKE ENGINEERING, LTD.
9575 W. Higgins Road, Suite 600
Rosemont, Illinois 60018
(847) 823-0500

PROJECT STAFF
PROJECT MANAGER:
ENGINEER:
ENGINEER:
ENGINEER:
TECHNICIAN:
TECHNICIAN:

TROTTER ASSOCIATES, INC.
ENGINEERS AND SURVEYORS
40W200 Wasco Road, Suite D
St. Charles, Illinois 60175
Ph. 630-587-0470 Fax: 630-587-0475

The Reserve at Hudson Crossing – Lighting Details

Oswego, Kendall County, Illinois

Project No.: SH0002
File Name:
Issue Date: 2/15/2019
Scale: N.T.S.
Sheet Number

LIGHT POLE FOUNDATION DEPTH TABLE
30 FT. (9.144 m) TO 35 FT. (10.668 m) MOUNTING HEIGHT

SOIL CONDITIONS	DESIGN DEPTH "D" OF FOUNDATION	
	SINGLE ARM POLE	TWIN ARM POLE
SOFT CLAY Qu = 0.375 TON/SQ. FT.	11'-0" (3.35 m)	12'-8" (3.85 m)
MEDIUM CLAY Qu = 0.75 TON/SQ.FT	9'-0" (2.74 m)	14'-10" (4.52 m)
STIFF CLAY Qu = 1.50 TON/SQ. FT.	7'-6" (2.29 m)	8'-7" (2.61 m)
LOOSE SAND Ø = 34°	9'-6" (2.90 m)	10'-7" (3.22 m)
MEDIUM SAND Ø = 37.5°	9'-0" (2.74 m)	9'-10" (2.99 m)
DENSE SAND Ø = 40°	8'-3" (2.51 m)	9'-7" (2.91 m)

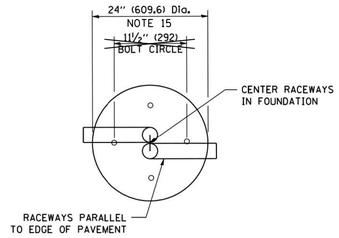

TOP VIEW

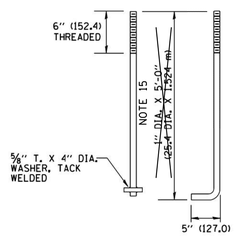

ANCHOR BOLT DETAIL

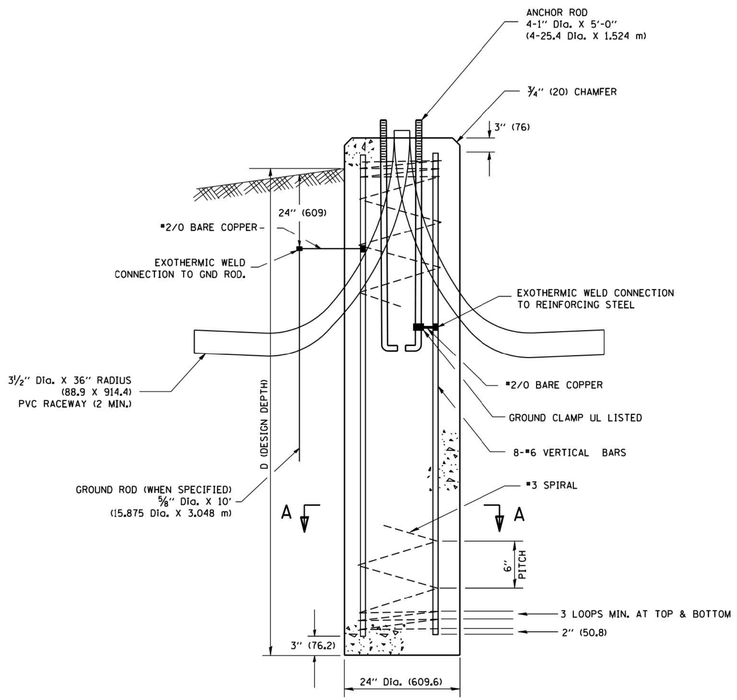

FOUNDATION DETAIL

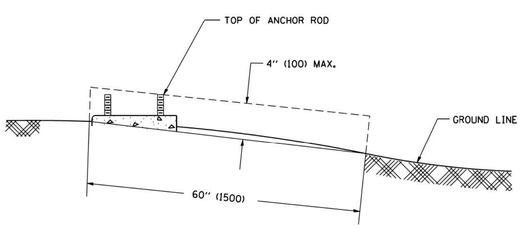

FOUNDATION EXTENSION DETAIL

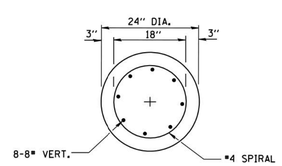

SECTION A-A

NOTES

1. ALL DIMENSIONS ARE IN INCHES (MILLIMETERS) UNLESS OTHERWISE SHOWN.
2. THE ANCHOR RODS AND RACEWAYS SHALL BE PROPERLY SECURED IN PLACE BEFORE THE CONCRETE IN PLACED.
3. THE FOUNDATION SHALL NOT PROTRUDE MORE THAN 4 IN. (100 mm) ABOVE THE FINISHED GRADE WITHIN A 60 IN. (1.5 m) CHORD ACROSS THE FOUNDATION, WITH ANCHOR RODS INCLUDED, IN ACCORDANCE WITH AASHTO GUIDELINES. IF THE FOUNDATION HEIGHT, INCLUDING ANCHOR RODS, EXTENDS BEYOND THESE SPECIFIED LIMITS, THE FOUNDATION SHALL BE REPLACED AT THE CONTRACTOR'S EXPENSE. SEE FOUNDATION EXTENSION DETAIL.
4. THE HOLE FOR THE FOUNDATION SHALL BE MADE BY DRILLING WITH AN AUGER, OF THE SAME DIAMETER AS THE FOUNDATION. IF SOIL CONDITIONS REQUIRE THE USE OF A LINER TO FORM THE HOLE, THE LINER SHALL BE WITHDRAWN AS THE CONCRETE IS DEPOSITED.
5. THE TOP OF THE FOUNDATION SHALL BE CONSTRUCTED LEVEL. A LINER OR FORM SHALL BE USED TO PRODUCE A UNIFORM SMOOTH SIDE TO THE TOP OF THE FOUNDATION. FOUNDATION TOP SHALL BE CHAMFERED ¾-IN. (20 mm).
6. THE CONCRETE SHALL BE CLASS SI. CONCRETE SHALL CURE ACCORDING TO ARTICLE 1020.13 BEFORE LIGHT POLES ARE INSTALLED.
7. THE ANCHOR ROD SHALL BE A HOOK ROD TYPE. COLD BENDING OF THE ANCHOR ROD WILL NOT BE ALLOWED. THE RADIUS OF THE HOOK BEND SHALL NOT BE LESS THAN 4 TIMES THE NOMINAL DIAMETER OF THE ANCHOR ROD. A TACK WELDED ANCHOR ROD MAY BE SUBSTITUTED WITH THE APPROVAL OF THE ENGINEER.
8. THE ANCHOR RODS SHALL BE ACCORDING TO ASTM F1554 GRADE 725 (GRADE 105). NUTS SHALL BE HEXAGON NUTS ACCORDING TO ASTM A 194 2H OR ASTM A 563 DH, AND WASHERS SHALL BE ACCORDING TO ASTM F 436.
9. ANCHOR RODS, NUTS AND WASHERS SHALL BE COMPLETELY GALVANIZED BY EITHER THE HOT-DIPPED PROCESS CONFORMING WITH AASHTO M 232, THE MECHANICAL PLATING METHOD CONFORMING TO AASHTO M 298, CLASS 50 WITH A MAXIMUM COATING THICKNESS OF 150 UM(6 MILS) OR THE ELECTROLYTIC PROCESS ACCORDING TO ASTM F 1136.
10. THE ANCHOR RODS SHALL BE THREADED A MINIMUM OF 6 INCHES (150 mm) WITH A MINIMUM OF 3 INCHES (75 mm) OF THREADED ANCHOR ROD EMBEDDED IN THE FOUNDATION.
11. ANCHOR RODS SHALL PROJECT 2¾" (69.9 mm) ABOVE THE TOP OF THE FOUNDATION. IF BREAKAWAY COUPLINGS ARE SPECIFIED, THE CONTRACTOR SHALL CAREFULLY COORDINATE THE ANCHOR ROD PROJECTION WITH THE INSTALLATION REQUIREMENTS OF THE BREAKAWAY COUPLINGS.
12. THE CONTRACTOR SHALL USE A #3 SPIRAL AT 6" (152.4 mm) PITCH OR MAY SUBSTITUTE #3 TIES AT 12" (304.8 mm) O.C. WITH THE APPROVAL OF THE ENGINEER.
13. THE CABLE TRENCHES AND FOUNDATION SHALL BE BACK FILLED AND COMPACTED AS SPECIFIED BEFORE THE LIGHT POLE IS ERECTED.
14. THE RACEWAYS SHALL PROJECT 1" (25.4 mm) ABOVE THE TOP OF THE FOUNDATION.
15. CONTRACTOR SHALL COORDINATE BOLT CIRCLE AND BOLT DIAMETER.

IDOT STANDARDS BE-300
REVISED 01-04-2008

CHRISTOPHER B. BURKE ENGINEERING, LTD.
9575 W. Higgins Road, Suite 600
Rosemont, Illinois 60018
(847) 823-0500

PROJECT STAFF
PROJECT MANAGER:
ENGINEER:
ENGINEER:
ENGINEER:
TECHNICIAN:
TECHNICIAN:

TROTTER ASSOCIATES, INC.
ENGINEERS AND SURVEYORS
409W20 Natoma Road, Suite D
Naperville, Illinois 60563
Ph: 630-587-0470 Fax: 630-587-0475

The Reserve at Hudson Crossing – Lighting Details

Oswego, Kendall County, Illinois

Project No.: SH0002
File Name:
Issue Date: 2/15/2019
Scale: N.T.S.
Sheet Number

FOUNDATION DESIGN TABLE

TYPE OF SOIL	DESIGN DEPTH OF FOUNDATION		REINFORCEMENT IN FOUNDATION			
	SINGLE ARM	TWIN ARM	SINGLE ARM		TWIN ARM	
	D	D	VERT BARS	SPIRAL	VERT BARS	SPIRAL
SOFT CLAY	13′-0″ (3.962 m)	15′-0″ (4.572 m)	8-#6X12′-6″ (3.810 m)	#3X122′ (37.186 m)	8-#6X14′-3″ (4.343 m)	#3X141′ (42.977 m)
MEDIUM CLAY	9′-6″ (2.896 m)	10′-9″ (3.277 m)	8-#6X9′-0″ (2.743 m)	#3X90′ (27.432 m)	8-#6X10′-0″ (3.048 m)	#3X100′ (30.480 m)
STIFF CLAY	7′-0″ (2.134 m)	8′-0″ (2.438 m)	8-#6X6′-6″ (1.981 m)	#3X66′ (20.112 m)	8-#6X7′-6″ (2.286 m)	#3X76′ (23.165 m)
LOOSE SAND	9′-0″ (2.743 m)	10′-0″ (3.048 m)	8-#6X8′-6″ (2.591 m)	#3X85′ (25.908 m)	8-#6X9′-6″ (2.896 m)	#3X94′ (28.651 m)
MEDIUM SAND	8′-3″ (2.515 m)	9′-0″ (2.743 m)	8-#6X8′-0″ (2.438 m)	#3X78′ (23.774 m)	8-#6X8′-6″ (2.591 m)	#3X85′ (25.908 m)
DENSE SAND	7′-9″ (2.362 m)	9′-0″ (2.743 m)	8-#6X7′-6″ (2.286 m)	#3X73′ (22.250 m)	8-#6X8′-6″ (2.591 m)	#3X85′ (25.908 m)
ROCK OR SOLIDIFIED SLAG	5′-0″ (1.524 m)	5′-0″ (1.524 m)	NONE	NONE	NONE	NONE

CONTRACTOR SHALL USE A STANDARD CONCRETE FOUNDATION WHEREVER POSSIBLE. IF UTILITY CONFLICTS PROHIBIT THE USE OF A STANDARD CONCRETE FOUNDATION, THE CONTRACTOR SHALL CONSULT WITH OWNER'S REPRESENTATIVE PRIOR TO THE USE OF AN OFFSET FOUNDATION.

NOTES

1. ALL DIMENSIONS ARE IN INCHES (MILLIMETERS) UNLESS OTHERWISE SHOWN.
2. THE ENGINEER SHALL DETERMINE THE CLASS OF SOIL DURING EXCAVATION AND SELECT THE DESIGN DEPTH OF FOUNDATION FROM THE DESIGN TABLE.
3. EXCAVATION OF THE POLE FOUNDATION SHALL BE MADE WITH AN AUGER, 24″ (609.6 mm) ~~OR 30″ (762.0 mm)~~ IN DIAMETER.
4. THE ANCHOR ROD SHALL BE A HOOK ROD TYPE. COLD BENDING OF THE ANCHOR ROD WILL NOT BE ALLOWED. THE RADIUS OF THE HOOK BEND SHALL NOT BE LESS THAN 4 TIMES THE NOMINAL DIAMETER OF THE ANCHOR ROD. A TACK WELDED ANCHOR ROD MAY BE SUBSTITUTED WITH THE APPROVAL OF THE ENGINEER.
5. THE ANCHOR BOLTS AND RACEWAYS SHALL BE PROPERLY SECURED IN PLACE BEFORE THE CONCRETE IS PLACED IN THE FORM.
6. THE ANCHOR RODS SHALL BE ACCORDING TO ASTM F1554 GRADE 725 (GRADE 105). NUTS SHALL BE HEXAGON NUTS ACCORDING TO ASTM A 194 2H OR ASTM A 563 DH, AND WASHERS SHALL BE ACCORDING TO ASTM F 436.
7. THE CONTRACTOR SHALL COORDINATE EXTENSION OF ANCHOR BOLTS ABOVE TOP OF FOUNDATION WITH THE BREAKAWAY DEVICE MANUFACTURER'S REQUIREMENTS. IF LIGHT POLE IS MOUNTED WITHOUT BREAKAWAY DEVICE, ANCHOR BOLTS SHALL PROJECT 2¾″ (69.9 mm) ABOVE TOP OF THE FOUNDATION. THE CONTRACTOR SHALL CONFIRM ANCHOR BOLT EXTENTION WITH ENGINEER.
8. RACEWAYS SHALL PROJECT 1″ (25.4 mm) ABOVE THE TOP OF THE FOUNDATION.
9. THE CABLE TRENCH SHALL BE BACKFILLED AND FIRMLY COMPACTED BEFORE THE LIGHT IS ERECTED.
10. CONTRACTOR SHALL COORDINATE BOLT CIRCLE AND BOLT DIAMETER.

PAID FOR UNDER "LIGHT POLE FOUNDATION, 24″ DIAMETER, OFFSET" (SEE SPECIAL PROVISION).

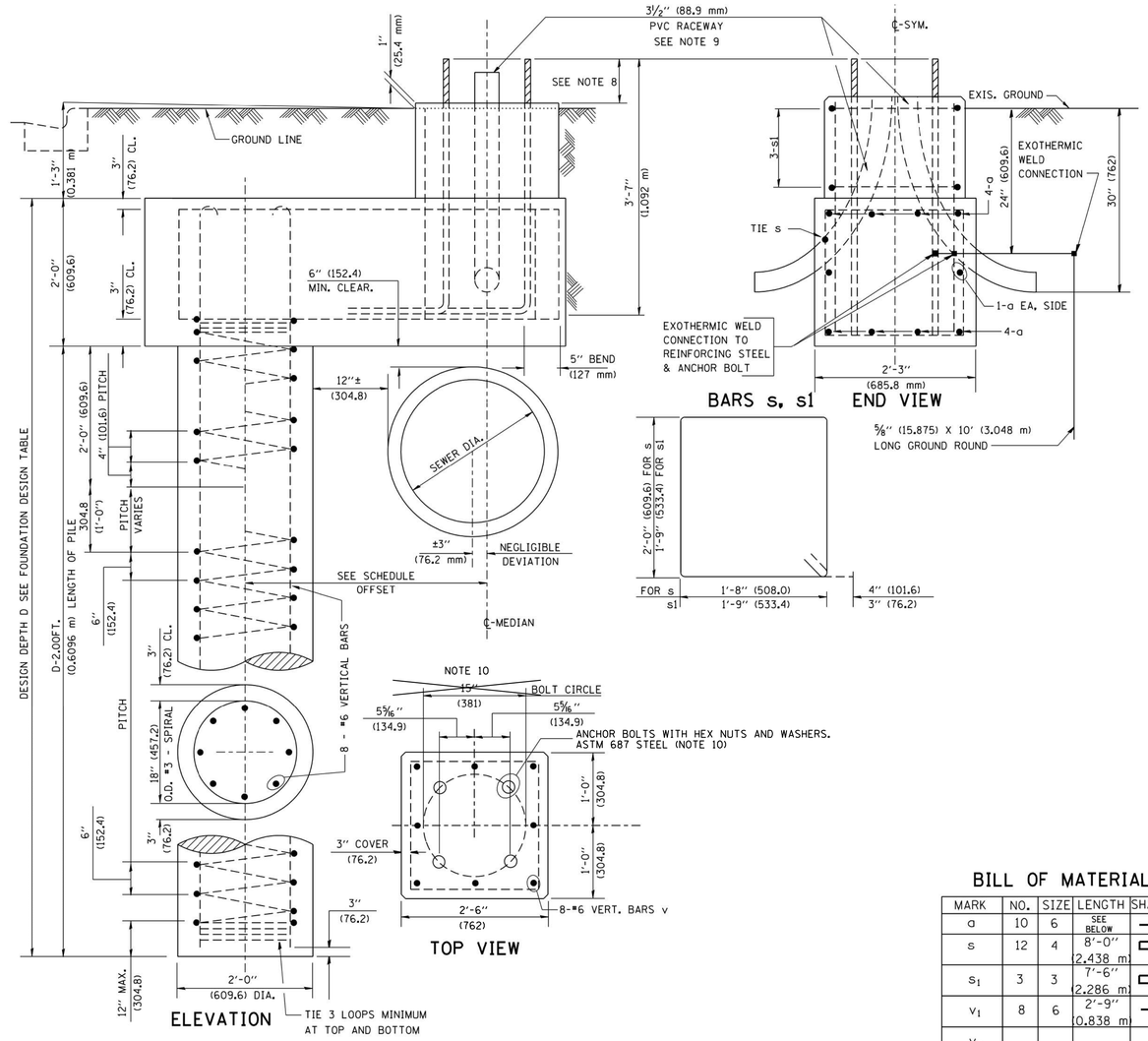

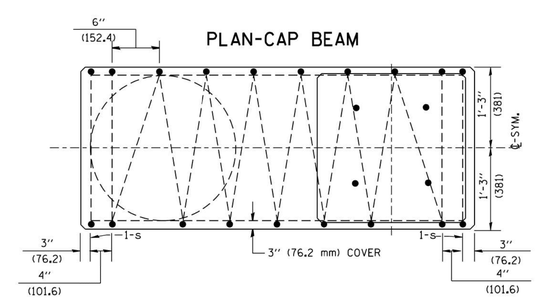

BILL OF MATERIAL

MARK	NO.	SIZE	LENGTH	SHAPE
a	10	6	SEE BELOW	—
s	12	4	8′-0″ (2.438 m)	▭
s_1	3	3	7′-6″ (2.286 m)	▭
v_1	8	6	2′-9″ (0.838 m)	—
v_2				

OFFSET SCHEDULE

SEWER DIAM. d IN.	PILE OFFSET from℄-MED'N FT.	LENGTH of BAR a FT.
UP TO 24″ (609.6 mm)	3′-3″ (0.991 m)	#6 x 5′-3″ (1.600 m)
27″ (685.8 m)TO 36″ (914.4 mm)	3′-9″ (1.143 m)	5′-9″ (1.753 m)
42″ (1066.8 mm) TO 48″ (1219.2 mm)	4′-6″ (1.372 m)	6′-6″ (1.981 m)
54″ (1371.6 mm) TO 60″ (1524.0 mm)	5′-0″ (1.524 m)	7′-0″ (2.134 m)
66″ (1676.4 mm) TO 72″ (1828.8 mm)	5′-6″ (1.676 m)	7′-6″ (2.286 m)

IDOT STANDARD BE-310

CHRISTOPHER B. BURKE ENGINEERING, LTD.
9575 W. Higgins Road, Suite 600
Rosemont, Illinois 60018
(847) 823-0500

TROTTER ASSOCIATES, INC.
ENGINEERS AND SURVEYORS
409W20 Natoma Road, Suite D
Oswego, Illinois 60543
Ph.: 630-587-0476 • Fax: 630-587-0475

PROJECT STAFF
PROJECT MANAGER:
ENGINEER:
ENGINEER:
ENGINEER:
ENGINEER:
TECHNICIAN:
TECHNICIAN:

The Reserve at Hudson Crossing – Lighting Details

Oswego, Kendall County, Illinois

Project No.: SH0002
File Name:
Issue Date: 2/15/2019
Scale: N.T.S.
Sheet Number
72

LEGEND

- P1 — PROPOSED 77W LED LUMINAIRE
- P1 — PROPOSED 360W RECEPTACLE
- EX 1 — EXISTING HID LUMINAIRE
- PROPOSED CONDUIT
- EXISTING CONDUIT
- GROUND IN PANEL
- SPLICE IN POLE BASE

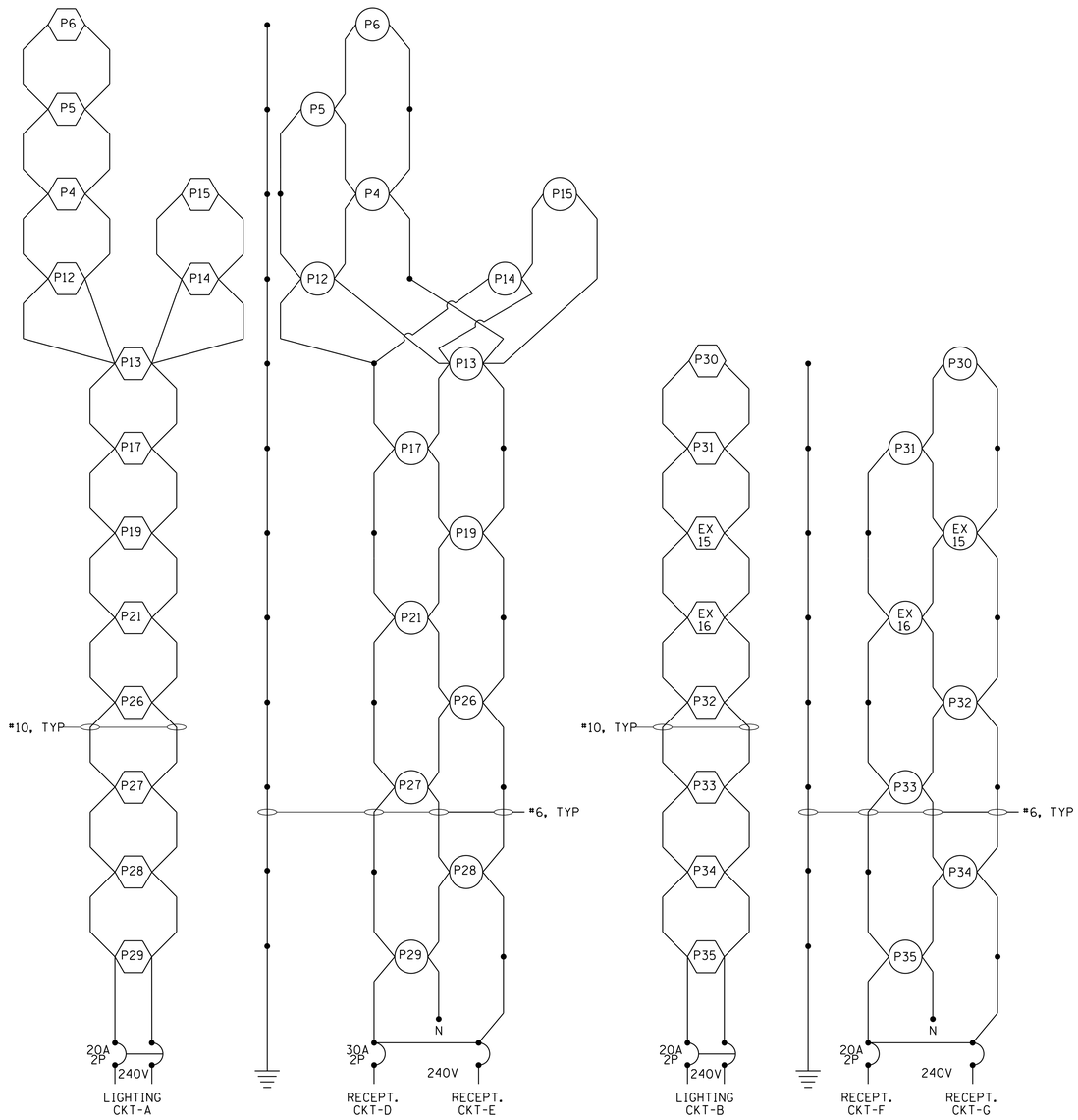

CONTROLLER 1 ONE-LINE DIAGRAM

N.T.S.

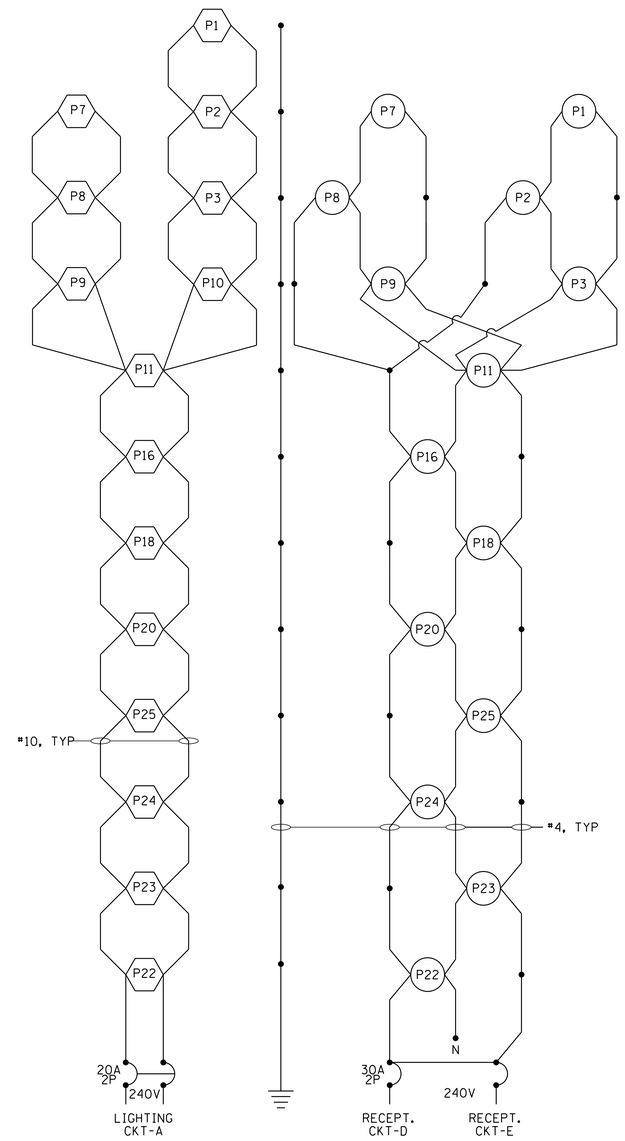

CONTROLLER 2 ONE-LINE DIAGRAM

N.T.S.

CHRISTOPHER B. BURKE ENGINEERING, LTD.
9575 W. Higgins Road, Suite 600
Rosemont, Illinois 60018
(847) 823-0500

PROJECT STAFF

PROJECT MANAGER:	•
ENGINEER:	•
ENGINEER:	•
ENGINEER:	•
TECHNICIAN:	•
TECHNICIAN:	•

TROTTER ASSOCIATES, INC.
ENGINEERS AND SURVEYORS
409W20 Nauss Road, Suite D
Yorkville, Illinois 60560
Ph.: 630-587-0476 • Fax: 630-587-0475

The Reserve at Hudson Crossing – Lighting Details

Oswego, Kendall County, Illinois

Project No.: SH0002

File Name:

Issue Date: 2/15/2019

Scale: N.T.S.

Sheet Number

F.A. ROUTE NO.	SECTION	COUNTY	TOTAL SHEETS	SHEET NO.
	00-00027-00-LT	KENDALL	57	24
ILLINOIS PROJECT: TE-00D3 (43)				

LIGHTING LEGEND

1 1/4" — UD	1 /4" UNIT DUCT W/6-1/C #6 & 1/C #8 BARE GND
1" — UD	1 UNIT DUCT W/3-1/C #6, & 1/C #8 BARE GND.
2 1/2"C, P-50' — PC	2 1/2" CONDUIT PUSHED 50' LONG FOR 1 1/4" UNIT DUCT
2"C, T-20' — U	2" CONDUIT TRENCHED 20' LONG FOR 1" UNIT DUCT
	LIGHTING CONTROLLER
A	LIGHT POLE & FIXTURE TYPE "A"-20' POLE/100 WATT METAL HALIDE FIXTURE AT 14' M.H.
B	LIGHT POLE & FIXTURE TYPE "B"-25' POLE/175 WATT METAL HALIDE FIXTURE AT 20' M.H.
C	LIGHT POLE & FIXTURE TYPE "C"-20' POLE/70 WATT METAL HALIDE FIXTURE AT 14' M.H.

GENERAL NOTES

1. ALL WORK SHALL CONFORM TO ANY APPLICABLE AND/OR ALL SECTIONS OF "STANDARD SPECIFICATIONS FOR ROAD AND BRIDGE CONSTRUCTION" DATED JANUARY 1, 2002 BY ILLINOIS DEPARTMENT OF TRANSPORATION. ALSO ANY AND ALL APPLICABLE "SPECIAL PROVISION" ISSUED BY I.D.O.T. TO DATE. ALL WORK SHALL ALSO CONFORM TO THE LATEST NEC.
2. THE CONTRACTOR SHALL NOTIFY ALL UTILITY COMPANIES FOR FIELD LOCATIONS OF THEIR FACILITIES PRIOR TO CONSTRUCTION. THE CONTRACTORS SHALL BE RESPONSIBLE FOR THE MAINTENANCE AND PRESERVATION OF THESE FACILITIES.
3. CONSTRUCTION STAKING AND INSPECTION TO BE PROVIDED BY THE ENGINEER.
4. THE CONTRACTOR SHALL PROVIDE WARRANTIES OR GUARANTEES PROVIDING FOR SATISFACTORY IN-SERVICE OPERATION OF THE MECHANICAL AND ELECTRICAL EQUIPMENT AND RELATED COMPONENTS FOR A PERIOD OF ONE (1) YEAR FOLLOWING PROJECT ACCEPTANCE. COST OF THESE WARRANTIES AND GUARANTEES SHALL BE CONSIDERED INCIDENTAL TO THE CONTRACT.
5. ALL AREAS DAMAGED OR DISTURBED BY THE INSTALLATION OF LIGHT POLES, FOUNDATIONS, UNDERGROUND CABLES, CONDUIT, AND CONTROL CABINET SHALL HAVE TOPSOIL REPLACED TO A DEPTH OF 4" FERTILIZED, AND SODDING IN ACCORDANCE WITH APPLICABLE SECTION OF THE "STANDARD SPECIFICATIONS".
6. ANY DAMAGE TO PAVEMENT, SIDEWALK, CURB OR ANY OTHER PORTION OF THE ROADWAY NOT SPECIFICALLY TO BE REMOVED AND REPLACED SHALL BE REPAIRED OR REPLACED BY THE CONTRACTOR. COST IS INCIDENTAL.
7. THE VILLAGE OF OSWEGO AND ENGINEER SHALL BE NOTIFIED 48 HOURS PRIOR TO COMMENCING EACH CONSTRUCTION PHASE.
8. COM-ED AND AMERITECH LINES SHALL BE LOCATED AND MARKED BY J.U.L.I.E. PRIOR TO CONSTRUCTION.

FOR INFORMATION ONLY

GENERAL SPECIFICATIONS

1. CONTROL INSTALLATION

   THE CONTROL CABINET AND ALL CONTROLS TO BE PROVIDED AND CONSTRUCTED PER DETAIL. ALL SERVICE EQUIPMENT SHALL BE RATED FOR A MINIMUM AVAILABLE FAULT CURRENT AS FOLLOWS: 22,000 RMS FOR MAIN CIRCUIT BREAKER, 10,000 RMS FOR BRANCH CIRCUIT BREAKERS AND FOR AUXILIARY CIRCUIT BREAKERS
   SUBMIT SHOP DRAWINGS FOR APPROVAL.

2. ELECTRICAL SERVICE CONNECTION

   THIS ITEM SHALL CONSIST OF WORK TO BE PREFORMED BY COM-ED IN MAKING THE CONNECTION OF ELECTRIC CABLES TO THEIR TRANSFORMER FOR 120/240V 60 HZ, SINGLE-PHASE, THREE-WIRE SYSTEM, AND ANY OTHER WORK DEEMED NECESSARY BY COM-ED, IN FULFILLING THE REQUIREMENTS OF THIS CONTRACT AS SHOWN ON THE PLANS AND SPECIFIED HEREIN THESE SPECIAL PROVISIONS.

   THE CONTRACTOR WILL BE REIMBURSED BY THIS CONTRACT TO THE EXACT AMOUNT OF MONEY AS BILLED BY COM-ED FOR THEIR SERVICES, AND NO EXTRA COMPENSATION SHALL BE PAID TO THE CONTRACTOR FOR ANY INCIDENTAL MATERIALS AND LABOR REQUIRED TO FULFILL THE REQUIREMENTS AS SHOWN ON THE PLANS AND SPECIFIED HEREIN. SEE SECTION 109.05 "STANDARD SPECIFICATIONS FOR ROAD AND BRIDGE CONSTRUCTION".

   THE CONTRACTOR SHALL CONTACT: JERRY KUEMPEL
   ACQUISTION AND PERMITS SUPERVISOR
   3 LINCOLN CENTER, 4TH FLOOR
   OAK BROOK TERRACE, IL 60181
   (630) 437-2212

COPYRIGHT © 2001, BY BAXTER & WOODMAN, INC.
PROPRIETARY AND CONFIDENTIAL
LICENSE IS HEREBY GRANTED TO REPRODUCE THIS DOCUMENT

CONSULTANTS	REV. NO.	DATE	DESCRIPTION
	1	11-20-01	PER IDOT REVIEW
	2	12-27-01	PER I.D.O.T. REVIEW
* REFER TO EQUIPMENT MANUFACTURER'S SHOP DRAWINGS	DRAWING FILE: 91009SH24.DWG		PLOTTED BY: NJP 27/DEC/01 15:00

BAXTER WOODMAN Consulting Engineers

Baxter & Woodman
Crystal Lake, Illinois 815.459.1260
Burlington, Wisconsin 262.763.7834
Mokena, Illinois 708.478.2090
DeKalb, Illinois 815.787.3111

VILLAGE OF OSWEGO, ILLINOIS
DOWNTOWN ENHANCEMENT PROJECT

LIGHTING DESIGN, LEGEND GENERAL NOTES AND GENERAL SPECIFICATIONS

DESIGNED BY JLR	SCALE NONE
DRAWN BY UKB	PROJECT NO. 991009
CHECKED BY JLR	SHEET NO.
DATE 10-8-01	**24 OF 57**

CHRISTOPHER B. BURKE ENGINEERING, LTD.
9575 W. Higgins Road, Suite 600
Rosemont, Illinois 60018
(847) 823-0500

PROJECT STAFF
PROJECT MANAGER:
ENGINEER:
ENGINEER:
ENGINEER:
TECHNICIAN:
TECHNICIAN:

TROTTER ASSOCIATES, INC.
ENGINEERS AND SURVEYORS
409W20 Nauss Road, Suite D
Naperville, Illinois 60563
Ph.: 630-587-0476 Fax: 630-587-0475

The Reserve at Hudson Crossing – Record Drawing

Oswego, Kendall County, Illinois

Project No.: SH0002
File Name:

Issue Date: 2/15/2019
Scale: N.T.S.
Sheet Number
74

F.A. ROUTE NO.	SECTION	COUNTY	TOTAL SHEETS	SHEET NO.
	00-00027-00-LT	KENDALL	57	25
ILLINOIS PROJECT: TE-00D3 (43)				

FOR INFORMATION ONLY

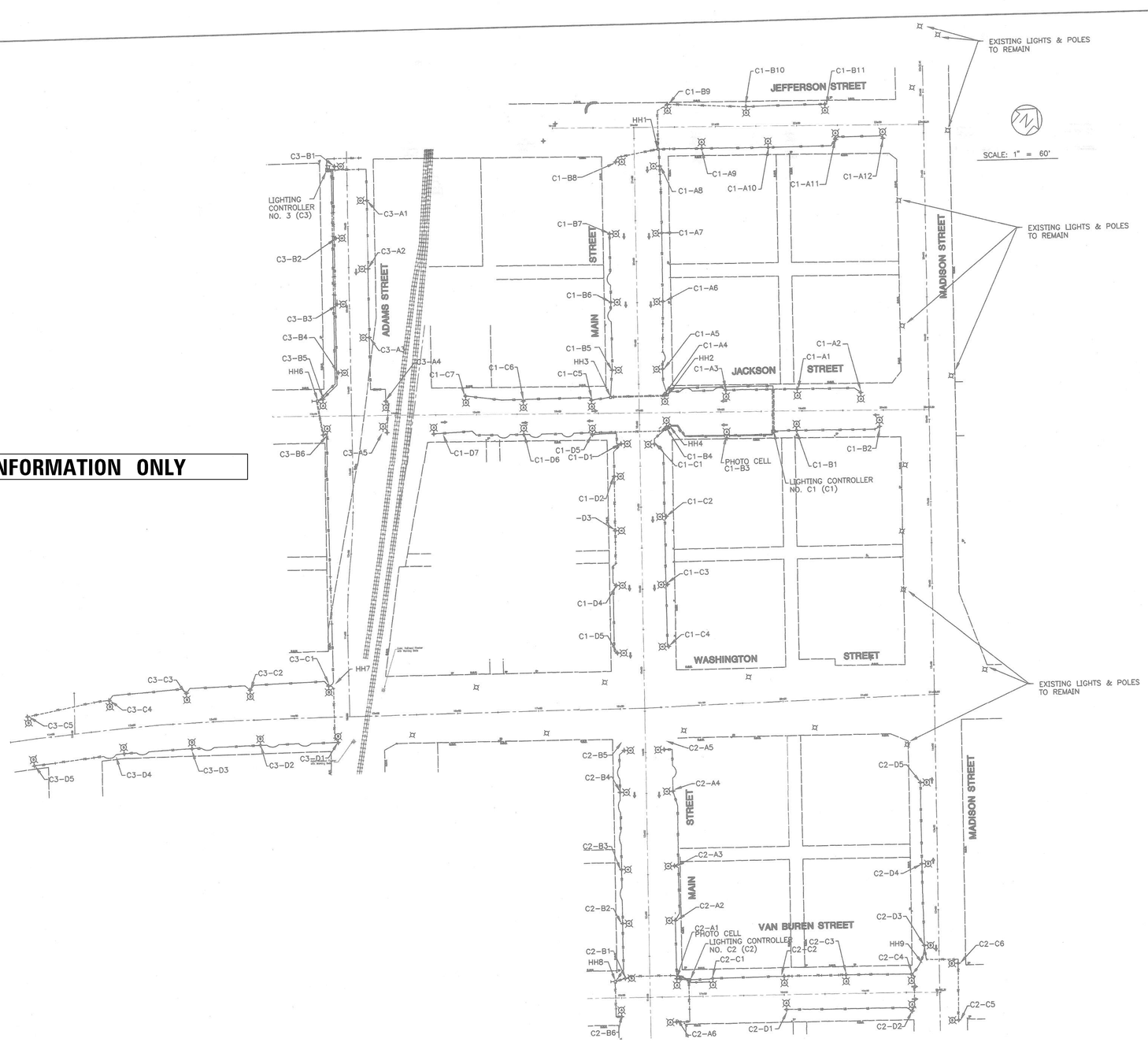

CONSULTANTS	REV. NO.	DATE	DESCRIPTION
	1	11-20-01	PER I.D.O.T. REVIEW

* REFER TO EQUIPMENT MANUFACTURER'S SHOP DRAWINGS

DRAWING FILE: 91009SH25.DWG PLOTTED BY: NJP 02/JAN/02 7:45

BAXTER & WOODMAN Consulting Engineers

Baxter & Woodman
Crystal Lake, Illinois 815.459.1260
Burlington, Wisconsin 262.763.7834
Mokena, Illinois 708.478.2090
DeKalb, Illinois 815.787.3111

VILLAGE OF OSWEGO, ILLINOIS
DOWNTOWN ENHANCEMENT PROJECT

STREET LIGHTING OVERALL PLAN

DESIGNED BY	SCALE
JLR	AS NOTED
DRAWN BY: UKB	PROJECT NO.: 991009
CHECKED BY: LDH	SHEET NO.: 25 OF 57
DATE: 10-8-01	

COPYRIGHT © 2001 BY BAXTER & WOODMAN, INC. CONSULTING ENGINEERS - ALL RIGHTS RESERVED LICENSE NO. - 184-001231 - EXPIRES 4/30/2003

CHRISTOPHER B. BURKE ENGINEERING, LTD.
9575 W. Higgins Road, Suite 600
Rosemont, Illinois 60018
(847) 823-0500

PROJECT STAFF
PROJECT MANAGER:
ENGINEER:
ENGINEER:
ENGINEER:
TECHNICIAN:
TECHNICIAN:

TROTTER ASSOCIATES, INC.
ENGINEERS AND SURVEYORS
409/420 Nelson Road, Suite D
Oswego, Illinois 60543
Ph.: 630-587-0476 • Fax: 630-587-0475

The Reserve at Hudson Crossing – Record Drawing

Oswego, Kendall County, Illinois

Project No.: SH0002
File Name:

Issue Date: 2/15/2019
Scale: N.T.S.
Sheet Number
75

F.A.P. ROUTE NO.	SECTION	COUNTY	TOTAL SHEETS	SHEET NO.
	00-00027-00-LT	KENDALL	57	27

ILLINOIS PROJECT: TE-00D3 (43)

SCALE: 1" = 20'

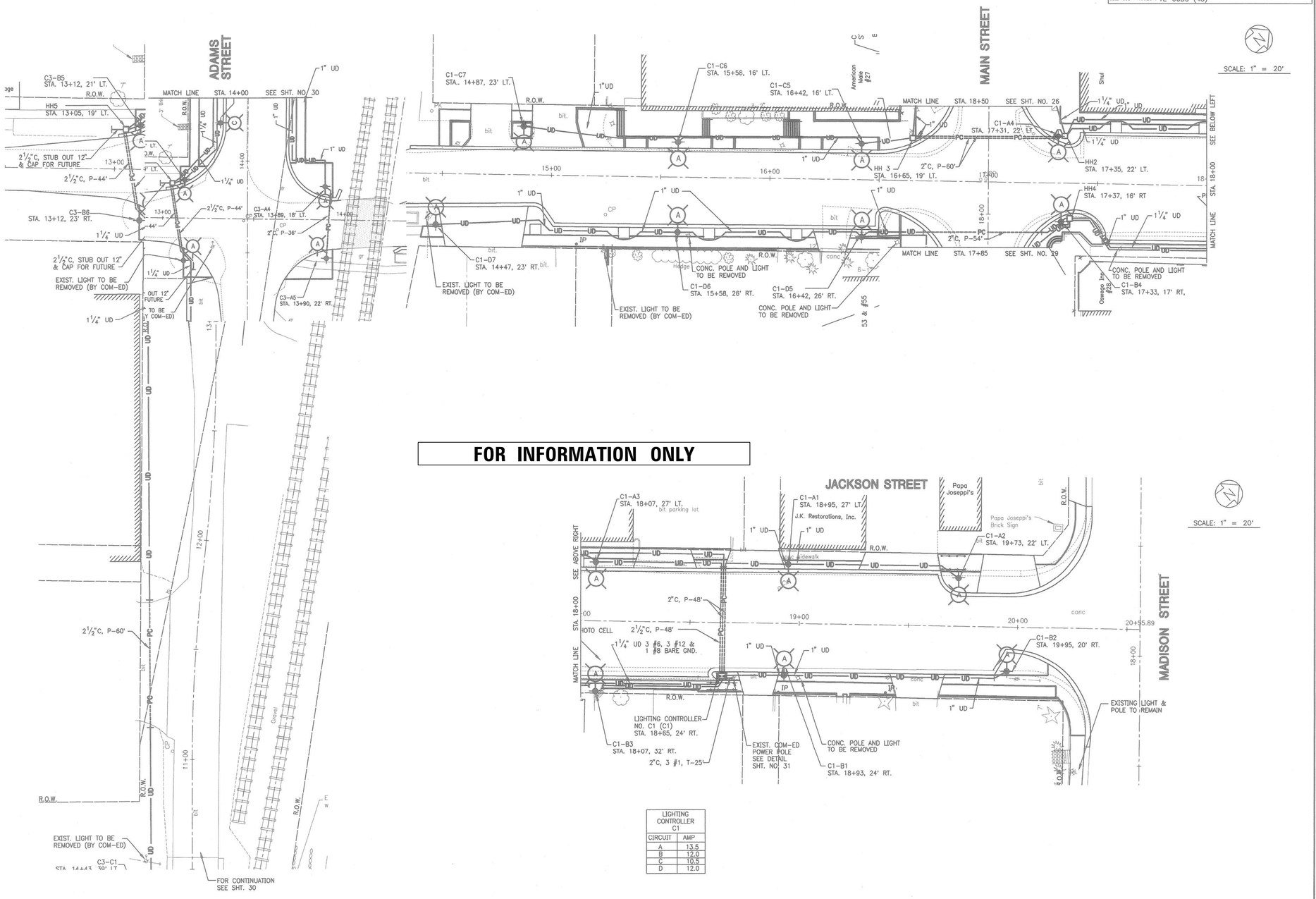

FOR INFORMATION ONLY

SCALE: 1" = 20'

LIGHTING CONTROLLER C1	
CIRCUIT	AMP
A	13.5
B	12.0
C	10.5
D	12.0

CONSULTANTS	REV. NO.	DATE	DESCRIPTION
	1	11-20-01	PER I.D.O.T. REVIEW
	2	12-28-01	PER I.D.O.T. REVIEW
* REFER TO EQUIPMENT MANUFACTURER'S SHOP DRAWINGS	DRAWING FILE: 91009LGHT.DWG		PLOTTED BY: UKB 06/DEC/01 16:04

COPYRIGHT © 2001 BY BAXTER & WOODMAN, INC. CONSULTING ENGINEERS, 8095 WOODMON, LENEXA, KANSAS 66214 LICENSE NO. 184-001121 EXPIRES 4/30/2003

BAXTER & WOODMAN Consulting Engineers

Baxter & Woodman
Crystal Lake, Illinois 815.459.1260
Burlington, Wisconsin 262.763.7834
Mokena, Illinois 708.478.2090
DeKalb, Illinois 815.787.3111

VILLAGE OF OSWEGO, ILLINOIS
DOWNTOWN ENHANCEMENT PROJECT

LIGHTING PLAN
JACKSON STREET
STA. 12+50 TO STA. 20+40

DESIGNED BY	SCALE
JLR	1"=20'
DRAWN BY	PROJECT NO.
UKB	991009
CHECKED BY	SHEET NO.
LDH	27 OF 57
DATE	
10-08-01	

CHRISTOPHER B. BURKE ENGINEERING, LTD.
9575 W. Higgins Road, Suite 600
Rosemont, Illinois 60018
(847) 823-0500

PROJECT STAFF
PROJECT MANAGER:
ENGINEER:
ENGINEER:
ENGINEER:
ENGINEER:
TECHNICIAN:
TECHNICIAN:

TROTTER ASSOCIATES, INC.
ENGINEERS AND SURVEYORS
409W20 Nauss Road, Suite D
Oswego, Illinois 60543
Ph.: 630-587-0475 Fax: 630-587-0475

The Reserve at Hudson Crossing – Record Drawing

Oswego, Kendall County, Illinois

Project No.: SH0002
File Name:
Issue Date: 2/15/2019
Scale: N.T.S.
Sheet Number

F.A.P. ROUTE NO.	SECTION	COUNTY	TOTAL SHEETS	SHEET NO.
	00-00027-00-LT	KENDALL	57	30
ILLINOIS PROJECT: TE-00D3 (43)				

SCALE: 1" = 20'

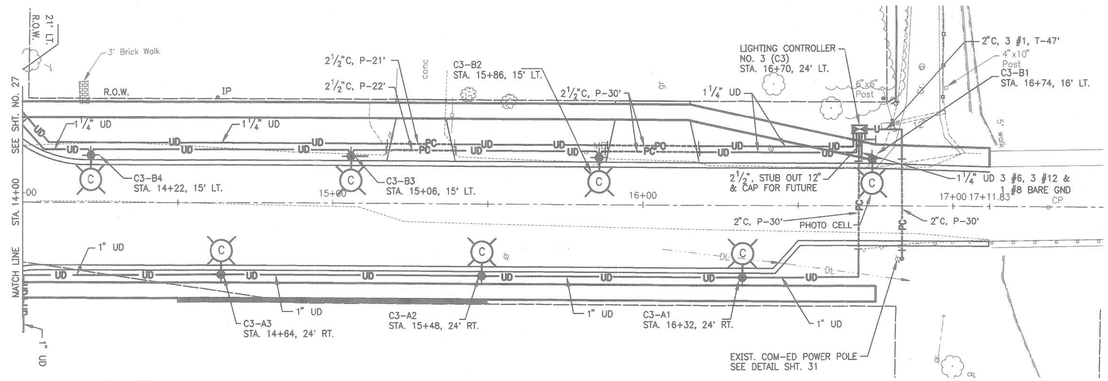

LIGHTING CONTROLLER C3	
CIRCUIT	AMP
A	7.5
B	9.0
C	7.5
D	7.5

FOR CONTINUATION SEE SHT. 27

FOR INFORMATION ONLY

SCALE: 1" = 20'

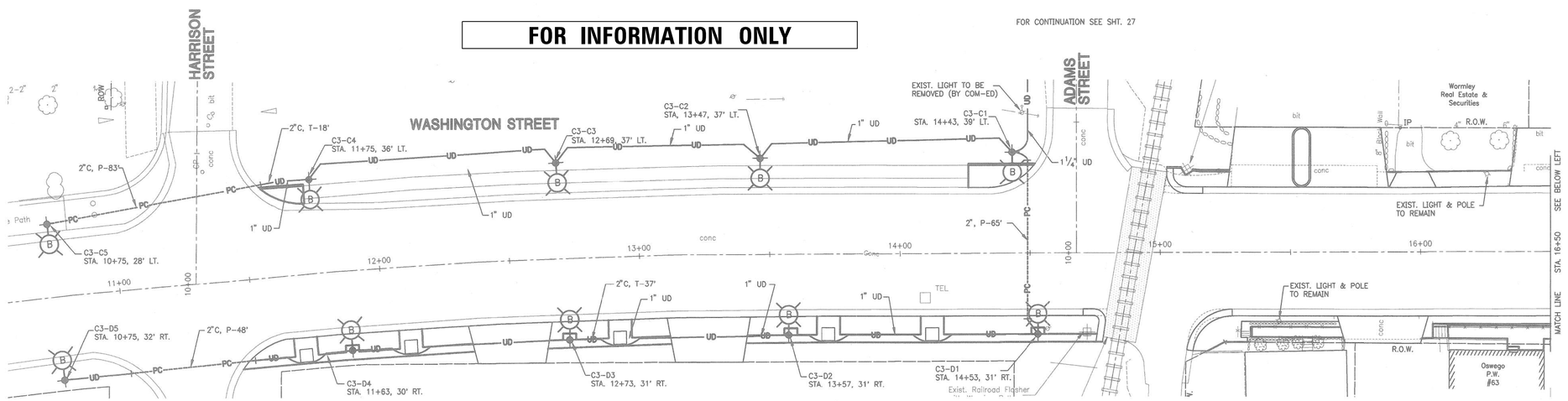

SCALE: 1" = 20'

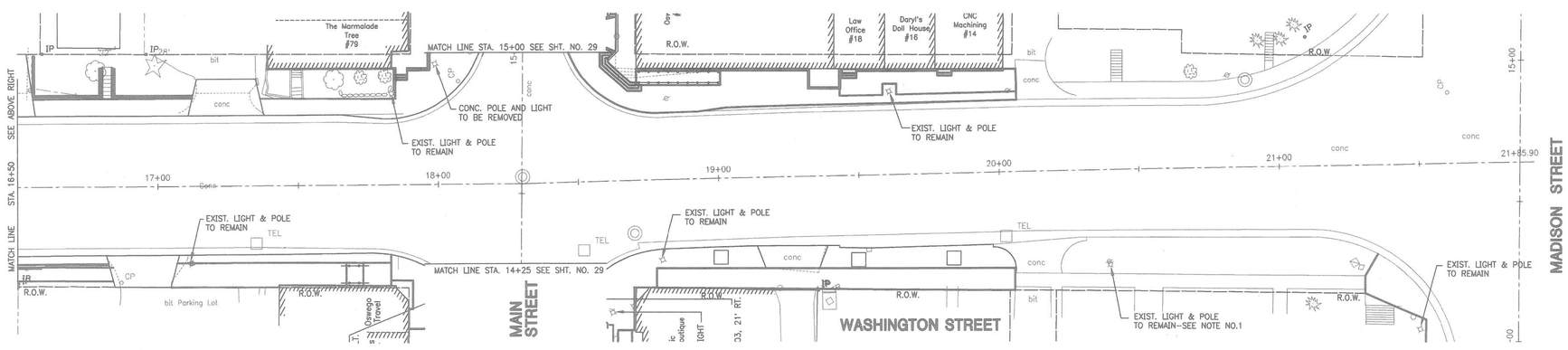

SCALE: 1" = 20'

CONSULTANTS	REV. NO.	DATE	DESCRIPTION
	1	11-20-01	PER I.D.O.T. REVIEW
	2	12-28-01	PER I.D.O.T. REVIEW
* REFER TO EQUIPMENT MANUFACTURER'S SHOP DRAWINGS	DRAWING FILE: 91009LGHT.DWG		PLOTTED BY: UKB 06/DEC/01 16:04

BAXTER & WOODMAN Consulting Engineers

Baxter & Woodman
Crystal Lake, Illinois 815.459.1260
Burlington, Wisconsin 262.763.7834
Mokena, Illinois 708.478.2090
DeKalb, Illinois 815.787.3111

VILLAGE OF OSWEGO, ILLINOIS
DOWNTOWN ENHANCEMENT PROJECT

LIGHTING PLAN
ADAMS ST. STA. 14+00 TO STA. 17+11.83
WASHINGTON ST. STA. 10+75 TO STA. 21+85.90

DESIGNED BY	SCALE
JLR	1"=20'
DRAWN BY	PROJECT NO.
UKB	991009
CHECKED BY	SHEET NO.
LDH	30 OF 57
DATE	
10-8-01	

COPYRIGHT © 2001 - BY BAXTER & WOODMAN, INC. PROFESSIONAL DESIGN FIRM LICENSE NO. - 184-001071 - EXPIRES 4/30/2003

CHRISTOPHER B. BURKE ENGINEERING, LTD.
9575 W. Higgins Road, Suite 600
Rosemont, Illinois 60018
(847) 823-0500

PROJECT STAFF
PROJECT MANAGER:
ENGINEER:
ENGINEER:
ENGINEER:
ENGINEER:
TECHNICIAN:
TECHNICIAN:

TROTTER ASSOCIATES, INC.
ENGINEERS AND SURVEYORS
409W20, Nature Room, Suite D
Glen Ellyn, Illinois 60137
Ph.: 630-587-0476 Fax: 630-587-0475

The Reserve at Hudson Crossing – Record Drawing

Oswego, Kendall County, Illinois

Project No.: SH0002
File Name:
Issue Date: 2/15/2019
Scale: N.T.S.
Sheet Number
77

F.A. ROUTE NO.	SECTION	COUNTY	TOTAL SHEETS	SHEET NO.
	00-00027-00-LT	KENDALL	57	31
ILLINOIS PROJECT: TE-00D3 (43)				

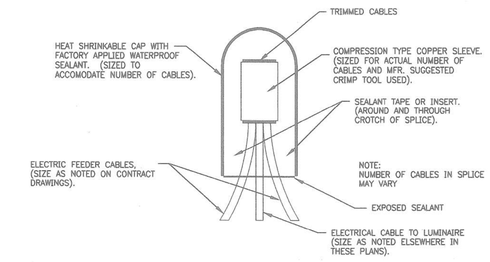

SPLICING ELECTRICAL CABLES BASIC MATERIALS AND METHODS

NO SCALE

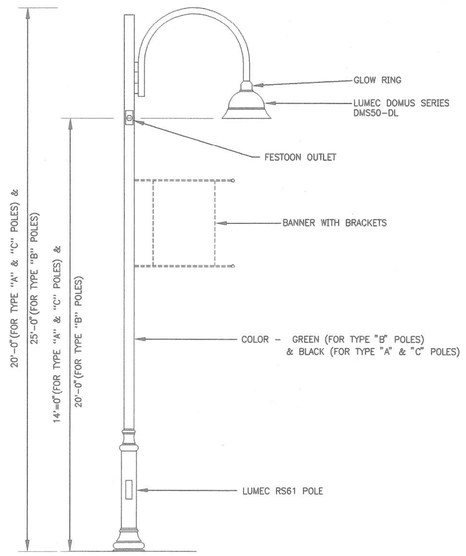

DECORATIVE STREET LIGHT

NO SCALE

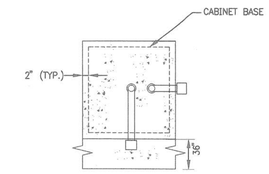

TOP VIEW

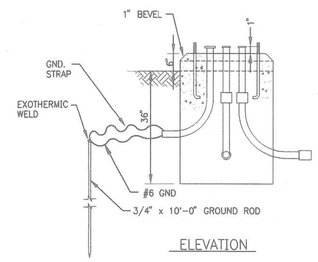

ELEVATION

CONTROLLER FOUNDATION

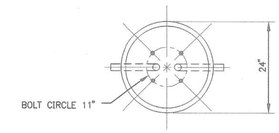

TOP VIEW

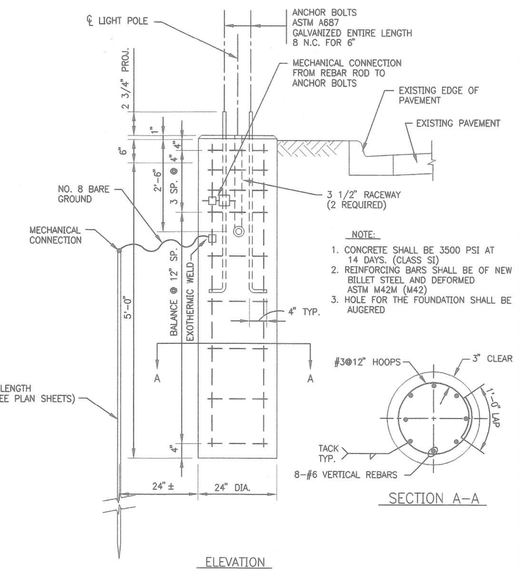

ELEVATION

LIGHT POLE FOUNDATION (TYPICAL)

NO SCALE

NOTE:

1. CONCRETE SHALL BE 3500 PSI AT 14 DAYS. (CLASS SI)
2. REINFORCING BARS SHALL BE OF NEW BILLET STEEL AND DEFORMED ASTM M42M (M42)
3. HOLE FOR THE FOUNDATION SHALL BE AUGERED

FOR INFORMATION ONLY

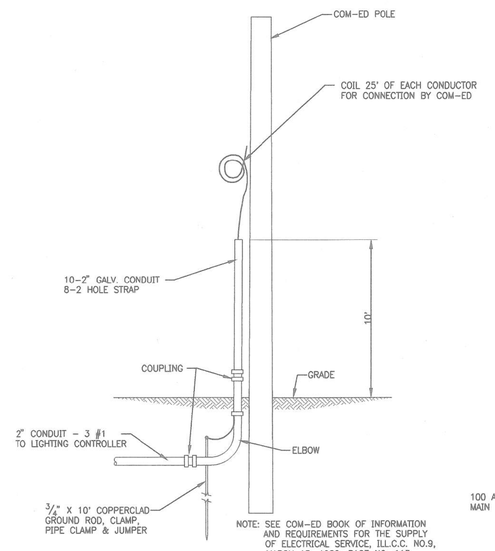

COM-ED OVERHEAD CONNECTION

NO SCALE

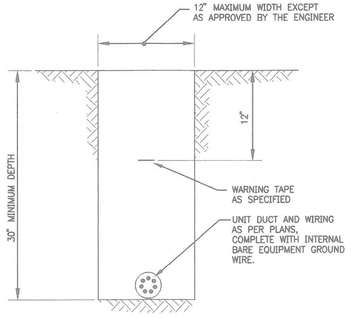

TYPICAL WIRING IN TRENCH DETAIL

NO SCALE

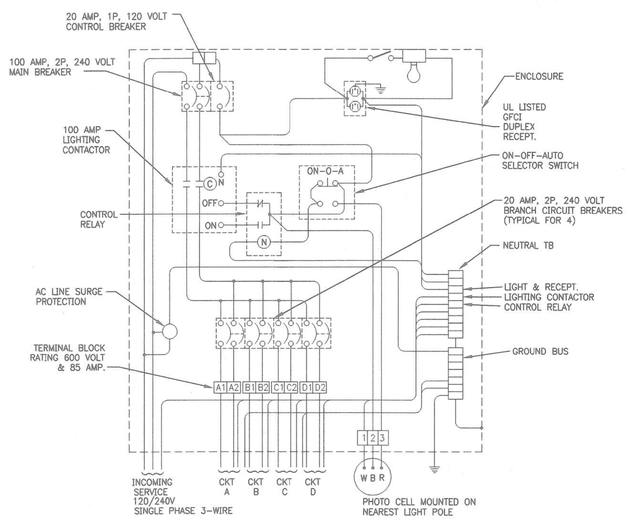

LIGHTING CONTROLLER C1, C2 & C3

NO SCALE

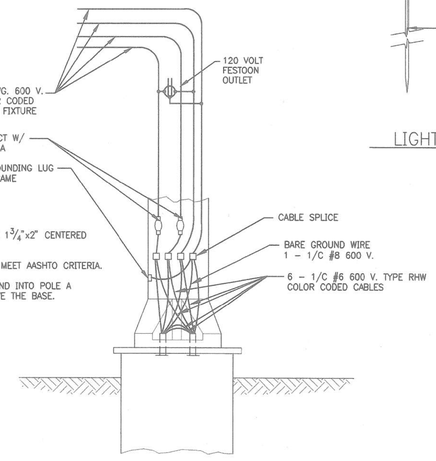

NOTES:

1. BOLT SLOTS SHALL BE $1\frac{3}{4}$"x2" CENTERED ON BOLT CIRCLE.
2. THE LIGHT POLE WILL MEET AASHTO CRITERIA.
3. THE DUCT SHALL EXTEND INTO POLE A MINIMUM OF 12" ABOVE THE BASE.

POLE BASE DETAIL

NO SCALE

CONSULTANTS	REV. NO.	DATE	DESCRIPTION
	1	11-20-01	PER I.D.O.T. REVIEW
	2	12-27-01	PER I.D.O.T. REVIEW

* REFER TO EQUIPMENT MANUFACTURER'S SHOP DRAWINGS | DRAWING FILE: 91009SH31.DWG | PLOTTED BY: CMS 27/DEC/01 16:29

COPYRIGHT © 2001 BY BAXTER & WOODMAN, INC. STATE OF ILLINOIS PROFESSIONAL DESIGN FIRM NO. 184-001168 EXPIRES 4/30/03

BAXTER & WOODMAN Consulting Engineers

Baxter & Woodman
Crystal Lake, Illinois 815.459.1260
Burlington, Wisconsin 262.763.7834
Mokena, Illinois 708.478.2090
DeKalb, Illinois 815.787.3111

VILLAGE OF OSWEGO, ILLINOIS
DOWNTOWN ENHANCEMENT PROJECT

LIGHT POLE, POLE BASE, FOUNDATION DETAILS, AND ELECTRIC SERVICE INSTALLATION

DESIGNED BY	SCALE
JLR	NONE
DRAWN BY	PROJECT NO.
UKB	991009
CHECKED BY	SHEET NO.
JLR	31 OF 57
DATE	
10-8-01	

CHRISTOPHER B. BURKE ENGINEERING, LTD.
9575 W. Higgins Road, Suite 600
Rosemont, Illinois 60018
(847) 823-0500

PROJECT STAFF
PROJECT MANAGER:
ENGINEER:
ENGINEER:
ENGINEER:
ENGINEER:
TECHNICIAN:
TECHNICIAN:

TROTTER ASSOCIATES, INC.
ENGINEERS AND SURVEYORS
40W200 Wilson Road, Suite D
St. Charles, Illinois 60175
Ph.: 630-587-0476 • Fax: 630-587-0475

The Reserve at Hudson Crossing - Record Drawing

Oswego, Kendall County, Illinois

Project No.: SH0002
File Name:
Issue Date: 2/15/2019
Scale: N.T.S.
Sheet Number
78

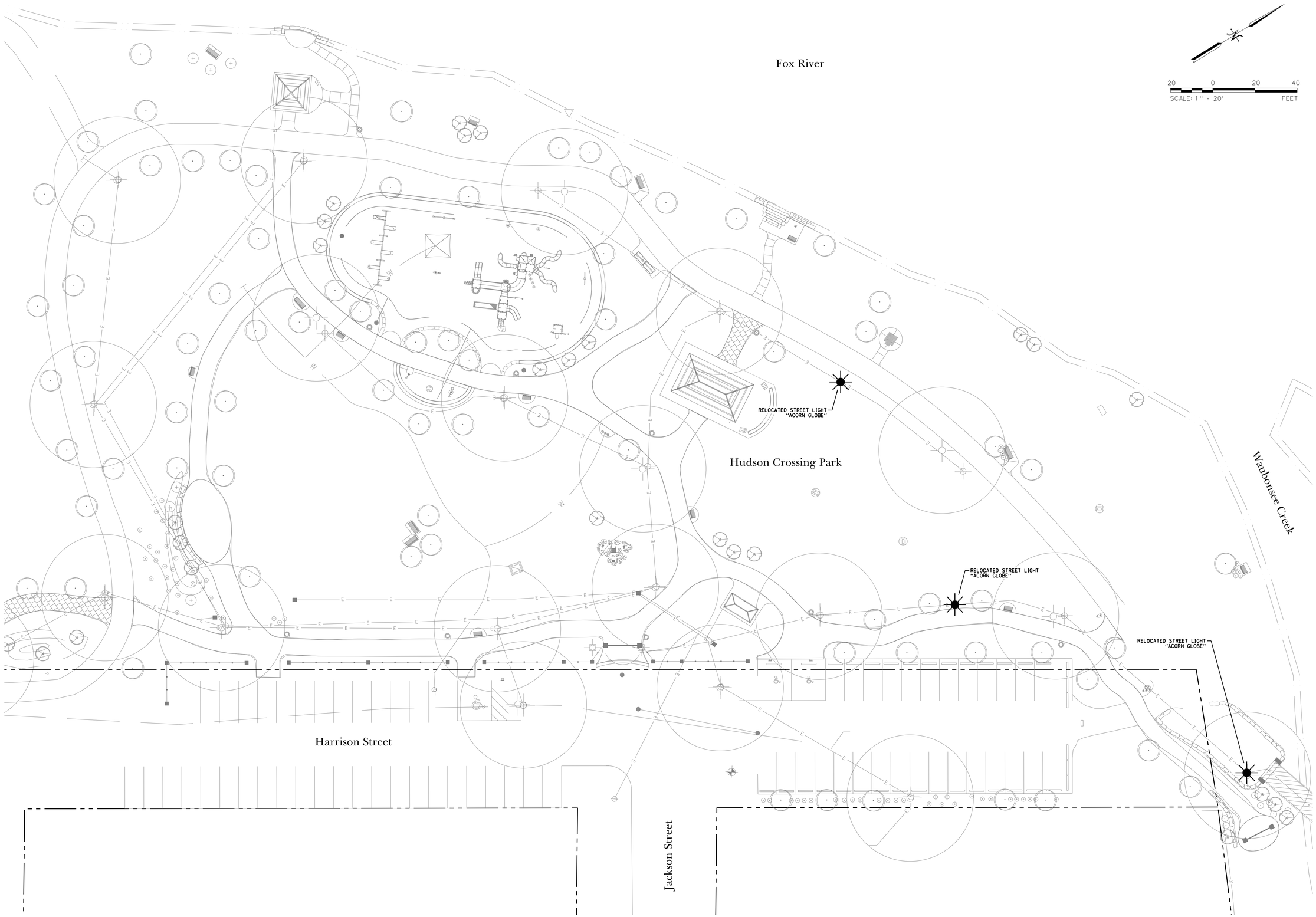

PROJECT STAFF	ISSUE	REVISIONS	DATE
PROJECT MANAGER:			
ENGINEER:			
ENGINEER:			
ENGINEER:	5.	ISSUED FOR BIDDING	2/21/19
TECHNICIAN:	4.	PER VILLAGE OF OSWEGO, IDOT, FOX METRO	2/15/19
TECHNICIAN:	3.	REVISIONS PER VILLAGE OF OSWEGO REVIEW	1/11/19
TECHNICIAN:	2.	REVISIONS PER VILLAGE OF OSWEGO REVIEW	12/4/18
	1.	REVISIONS PER VILLAGE OF OSWEGO REVIEW	11/21/18

TROTTER ASSOCIATES, INC.
ENGINEERS AND SURVEYORS
4049 W. Mason Road, Suite D
Oswego, Illinois 60543
Ph.: 630-587-0170 • Fax: 630-587-0175

The Reserve at Hudson Crossing - Roadway Improvements
Hudson Crossing Park
Lighting Plan
Oswego, Kendall County, Illinois

Project No.: SH0002

File Name: 79_PARK_LIGHTING.dgn

Issue Date: 2/21/2019

Scale: 1" = 20'

Sheet Number

79

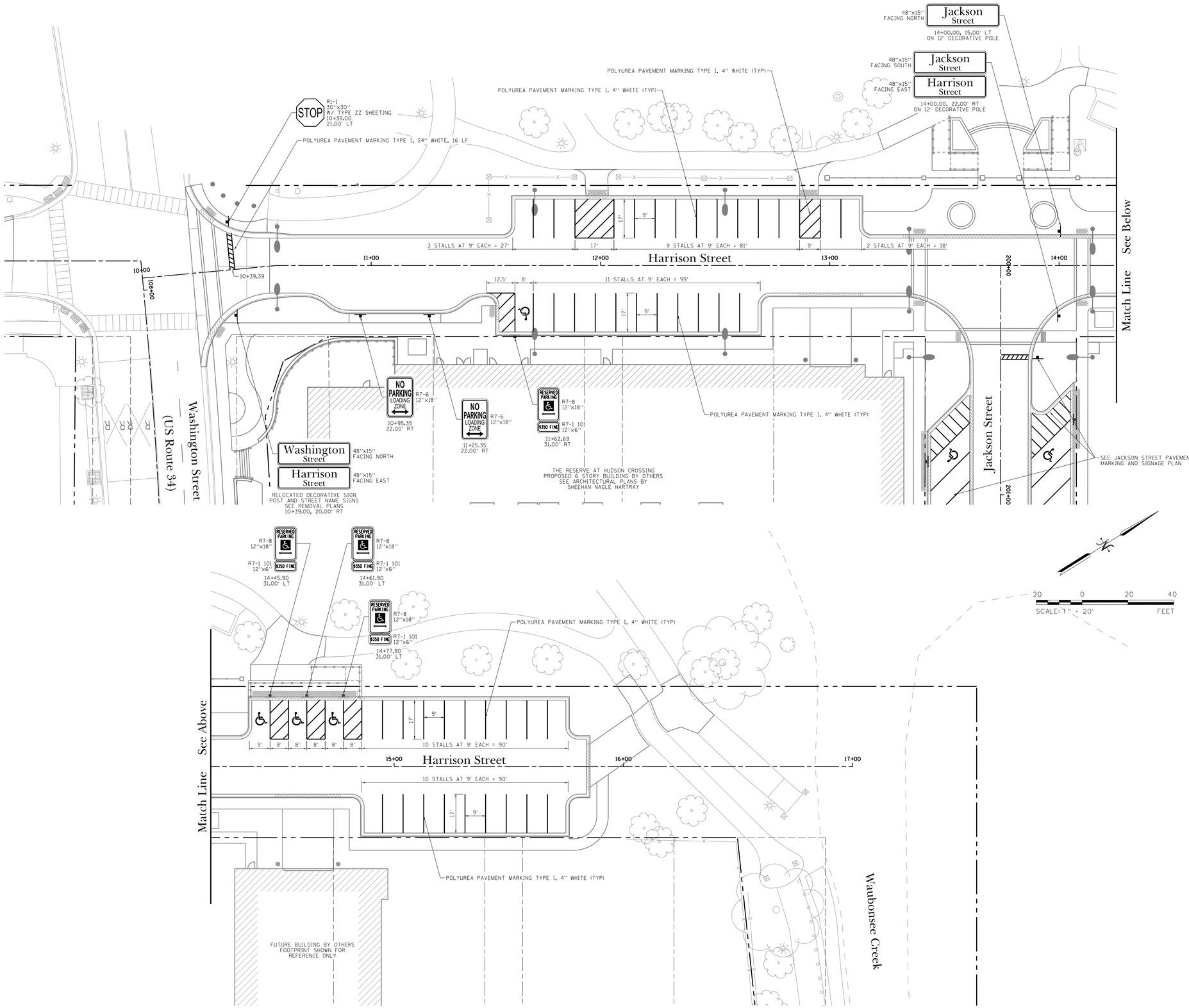

ISSUE	REVISIONS	DATE
5.	ISSUED FOR BIDDING	2/21/19
4.	PER VILLAGE OF OSWEGO, IDOT, FOX METRO	2/15/19
3.	REVISIONS PER VILLAGE OF OSWEGO REVIEW	1/11/19
2.	REVISIONS PER VILLAGE OF OSWEGO REVIEW	12/4/18
1.	REVISIONS PER VILLAGE OF OSWEGO REVIEW	11/21/18

PROJECT STAFF
PROJECT MANAGER:
ENGINEER:
ENGINEER:
ENGINEER:
TECHNICIAN:
TECHNICIAN:

TROTTER ASSOCIATES, INC.
ENGINEERS AND SURVEYORS
400 W. Veterans Parkway, Suite D
Yorkville, Illinois 60560
Ph. 630-587-0170 • Fax: 630-587-0175

The Reserve at Hudson Crossing - Roadway Improvements

Pavement Marking and Signage Plan - Harrison Street

Oswego, Kendall County, Illinois

Project No.: SH0002
File Name: 80_PMK_HAR.dgn
Issue Date: 2/21/2019
Scale: 1" = 20'
Sheet Number
80

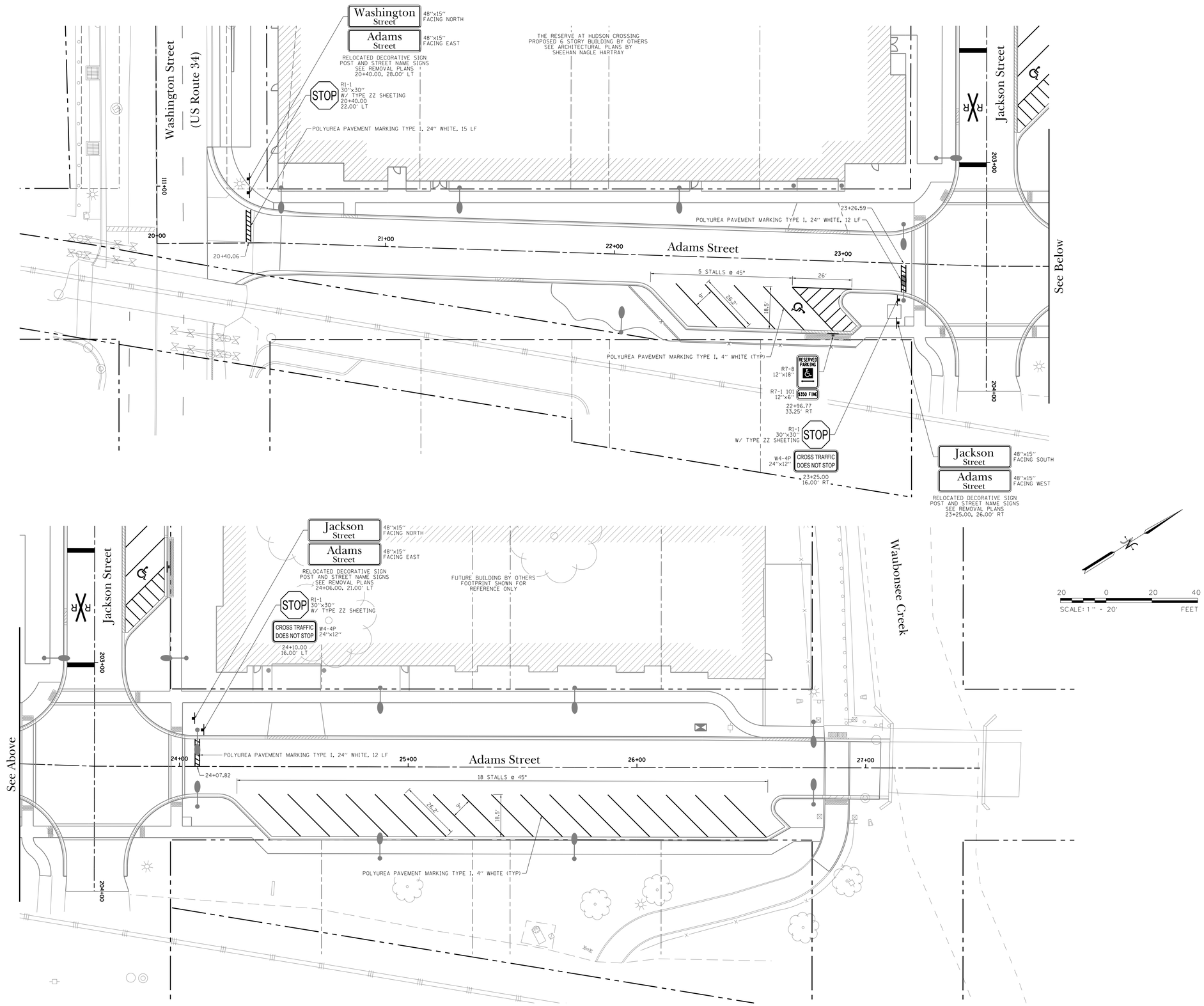

DATE	REVISIONS	ISSUE
2/21/19	ISSUED FOR BIDDING	5.
2/15/19	PER VILLAGE OF OSWEGO, IDOT, FOX METRO	4.
1/11/19	REVISIONS PER VILLAGE OF OSWEGO REVIEW	3.
12/4/18	REVISIONS PER VILLAGE OF OSWEGO REVIEW	2.
11/21/18	REVISIONS PER VILLAGE OF OSWEGO REVIEW	1.

PROJECT STAFF

PROJECT MANAGER:
ENGINEER:
ENGINEER:
ENGINEER:
TECHNICIAN:
TECHNICIAN:

TROTTER
ASSOCIATES, INC.
ENGINEERS AND SURVEYORS
400 N. Main Street, Suite D
Wheaton, Illinois 60187
Ph. 630-587-0170 • Fax 630-587-0175

The Reserve at Hudson Crossing - Roadway Improvements

Pavement Marking and Signage Plan - Adams Street

Oswego, Kendall County, Illinois

Project No.: SH0002

File Name: 81_PMK_ADAMS.dgn

Issue Date: 2/21/2019

Scale: 1" = 20'

Sheet Number

81

DATE	REVISIONS	ISSUE
2/21/19	ISSUED FOR BIDDING	5.
2/15/19	PER VILLAGE OF OSWEGO, IDOT, FOX METRO	4.
1/11/19	REVISIONS PER VILLAGE OF OSWEGO REVIEW	3.
12/4/18	REVISIONS PER VILLAGE OF OSWEGO REVIEW	2.
11/21/18	REVISIONS PER VILLAGE OF OSWEGO REVIEW	1.

PROJECT STAFF

PROJECT MANAGER:
ENGINEER:
ENGINEER:
ENGINEER:
TECHNICIAN:
TECHNICIAN:

TROTTER ASSOCIATES, INC.
ENGINEERS AND SURVEYORS
400 W. Veterans Parkway, Suite D
Yorkville, Illinois 60560
Ph. 630-587-0170 • Fax 630-587-0175

The Reserve at Hudson Crossing - Roadway Improvements

Pavement Marking and Signage Plan - Jackson Street

Oswego, Kendall County, Illinois

Project No.: SH0002

File Name: 82_PMK_JACK.dgn

Issue Date: 2/21/2019

Scale: 1" = 20'

Sheet Number

82

NOTES

1. PERENNIAL AND ANNUAL SEASONAL COLOR IN PLANTERS BY OSWEGO PARK DISTRCT. RAISED CIRCULAR PLANTER TO BE BUILT AT SEAT WALL HIEGHT AND MATCH WALL STONE ON WASHINGTON STREET
2. RAIN GARDEN AREA 1060 S.F. TOTAL AREA SOIL MIX: 50% TOPSOIL 30% COURSE SAND 20% LEAF MULCH/COMPOST INSTALL 480 PLANT PLUGS (SEE DETAIL SHEET) 18" O.C. EQUAL QUANTITIES IN CLUSTERS OF 5 TO 7 PLANTS

KEY

- BENCH DuMor 58 SERIES
- PLANTER LANDSCAPEFORMS ROSA 39 GAL MILLSTONE
- TRASH RECEPTACLE DuMor 84-32-FTO
- RECYCLABLE RECEPTACLE OSWEGO PROPRIETARY
- PUBLIC ART BY OTHERS

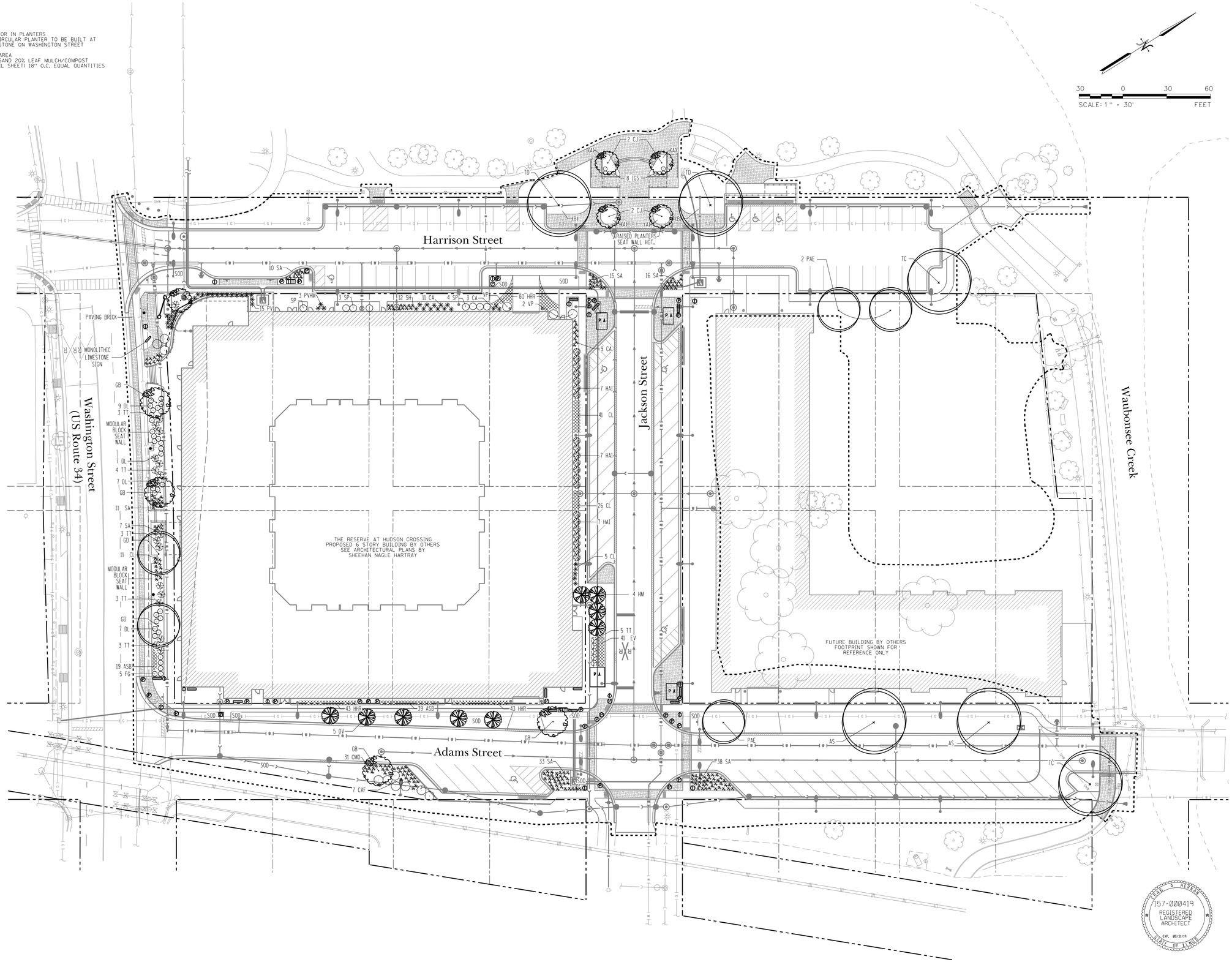

DATE	REVISIONS	ISSUE
2/21/19	ISSUED FOR BIDDING	5.
2/15/19	PER VILLAGE OF OSWEGO, IDOT, FOX METRO	4.
1/11/19	REVISIONS PER VILLAGE OF OSWEGO REVIEW	3.
12/4/18	REVISIONS PER VILLAGE OF OSWEGO REVIEW	2.
11/21/18	REVISIONS PER VILLAGE OF OSWEGO REVIEW	1.

PROJECT STAFF
PROJECT MANAGER:
ENGINEER:
ENGINEER:
ENGINEER:
TECHNICIAN:
TECHNICIAN:

TROTTER ASSOCIATES, INC.
ENGINEERS AND SURVEYORS
400-20 N. Orson Rodd, Suite D
Oswego, Illinois 60543
Ph. 630-587-0170 • Fax 630-587-0175

The Reserve at Hudson Crossing - Roadway Improvements

Landscape Plan

Oswego, Kendall County, Illinois

STEVEN A. HERMAN
157-000419
REGISTERED LANDSCAPE ARCHITECT
EXP. 00/31/19
STATE OF ILLINOIS

Project No.:	SH0002
File Name:	83_L.S._PLAN.dgn
Issue Date:	2/21/2019
Scale:	1" = 30'
Sheet Number	83

☐ SELECT DESIRED MOUNTING OPTION
☑ EMBEDDED - E
☐ SURFACE FLANGE - F

☐ SELECT DESIRED FINISH
☑ HOT-DIPPED GALVANIZED - G
☐ POLYESTER POWDER COAT - P
☐ STAINLESS STEEL (#4 SATIN FINISH) - SS
☐ THERMOPLASTIC POWDER COAT

☐ SELECT DESIRED COLOR
☐ RED ☐ GREY
☐ GREEN ☐ YELLOW
☑ BLACK ☐ WHITE
☐ BLUE ☐ BEIGE
☐ BRONZE ☐ TEAL
☐ SKY BLUE ☐ CUSTOM

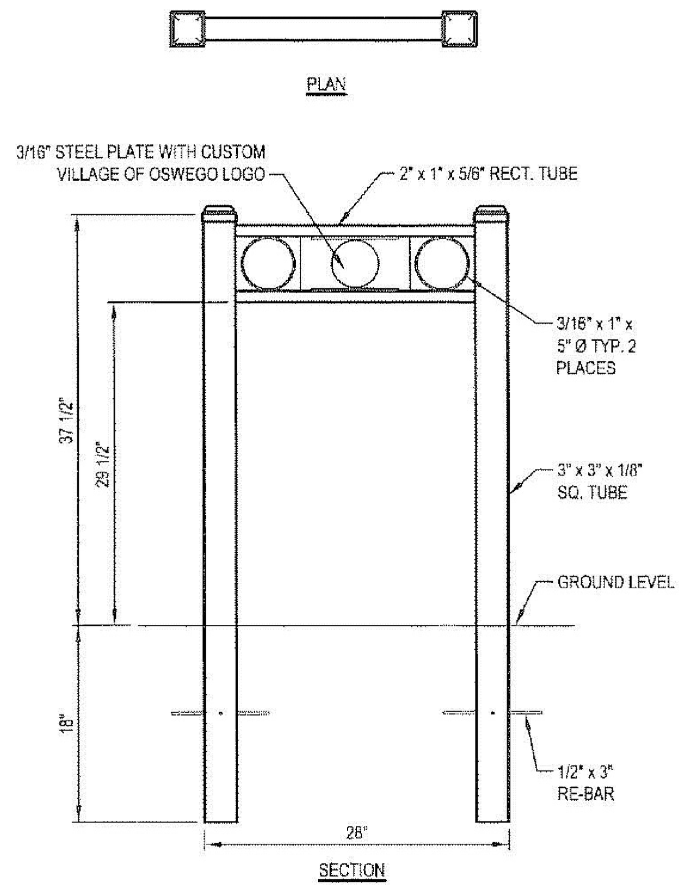

NOTES:
1. INSTALLATION TO BE COMPLETED IN ACCORDANCE WITH MANUFACTURERS SPECIFICATIONS.
2. DO NOT SCALE DRAWINGS.
3. CONTRACTORS NOTE: FOR PRODUCT AND COMPANY INFORMATION, VISIT www.CADdetails.com/info REFERENCE NUMBER 474-026.

1 BICYCLE RACK DETAIL
NOT TO SCALE

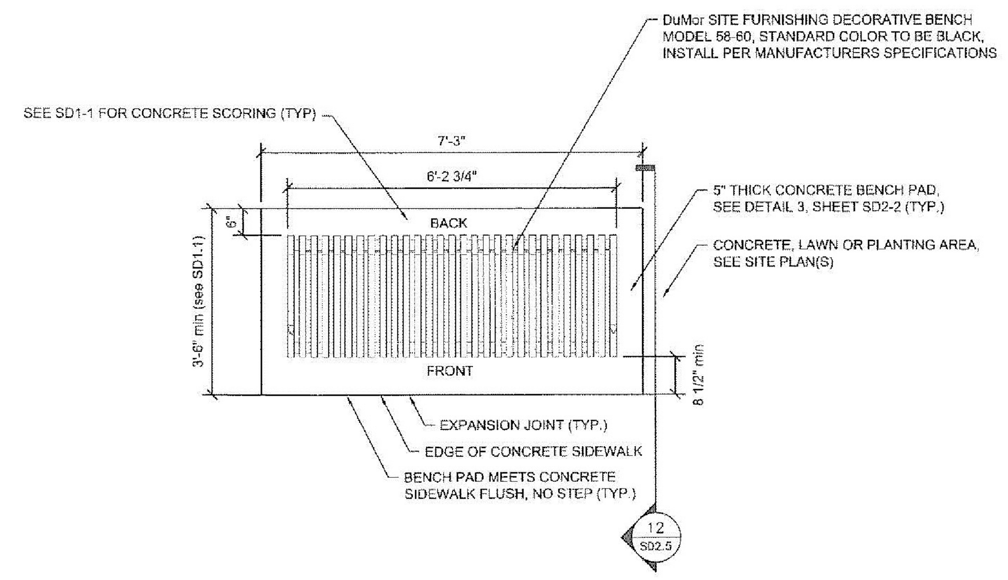

2 TYPICAL ORNAMENTAL BENCH DETAIL PLAN
1/2" = 1'-0"

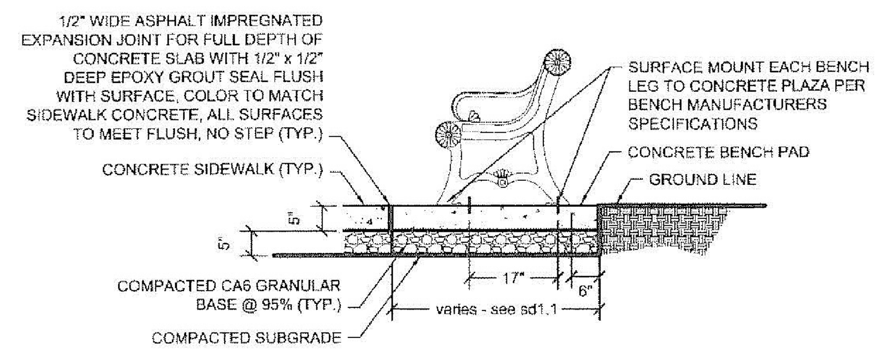

3 TYPICAL ORNAMENTAL BENCH SECTION
1/2" = 1'-0"

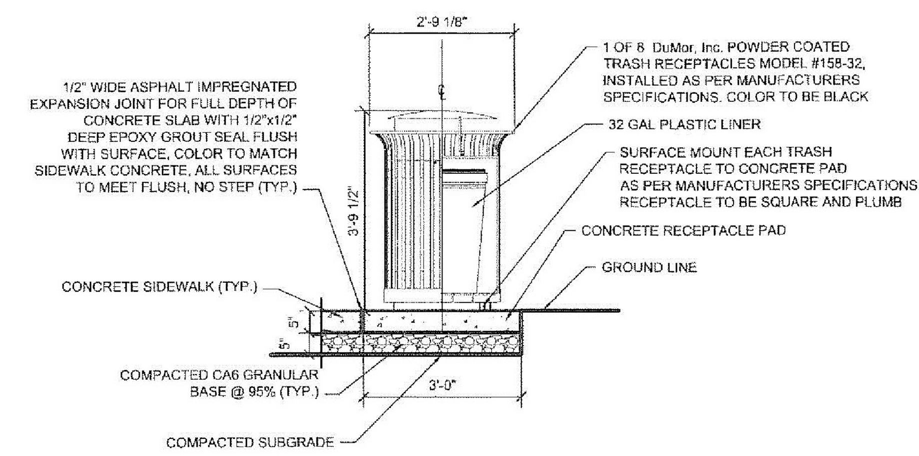

5 TYPICAL TRASH RECEPTACLE SECTION
1/2" = 1'-0"

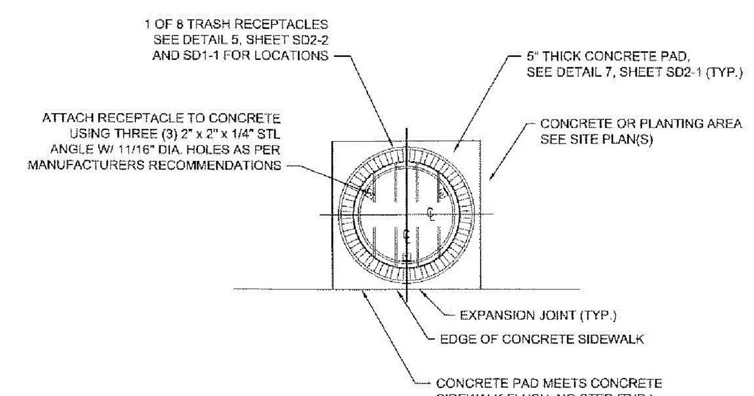

7 TYPICAL TRASH RECEPTACLE DETAIL PLAN
1/2" = 1'-0"

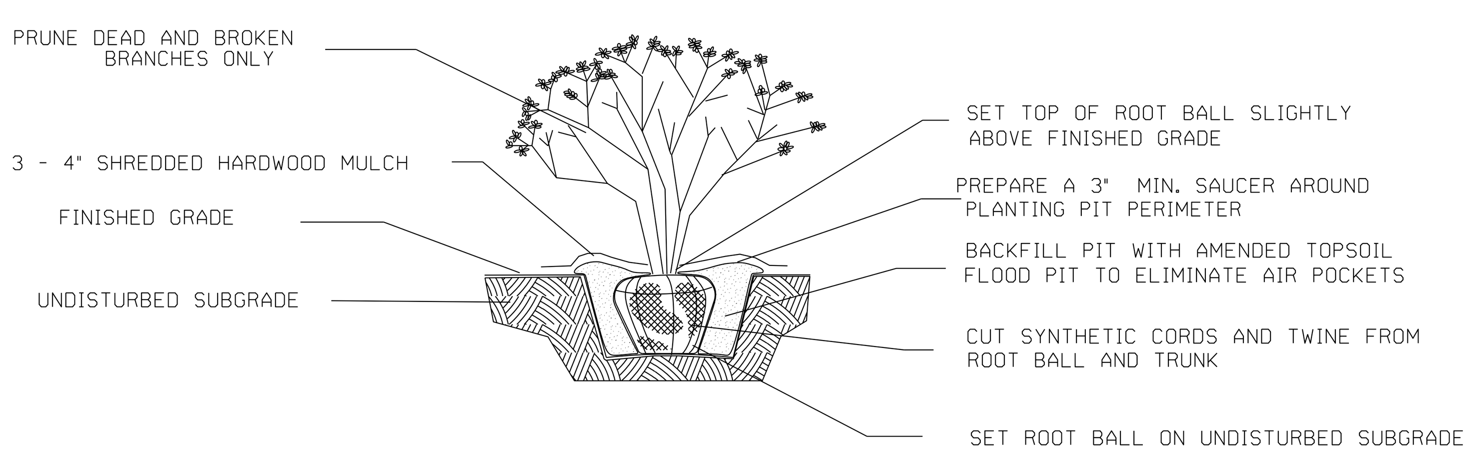

SHRUB PLANTING DETAIL
NOT TO SCALE USE ONLY NORTHERN ILLINOIS GROWN NURSERY STOCK

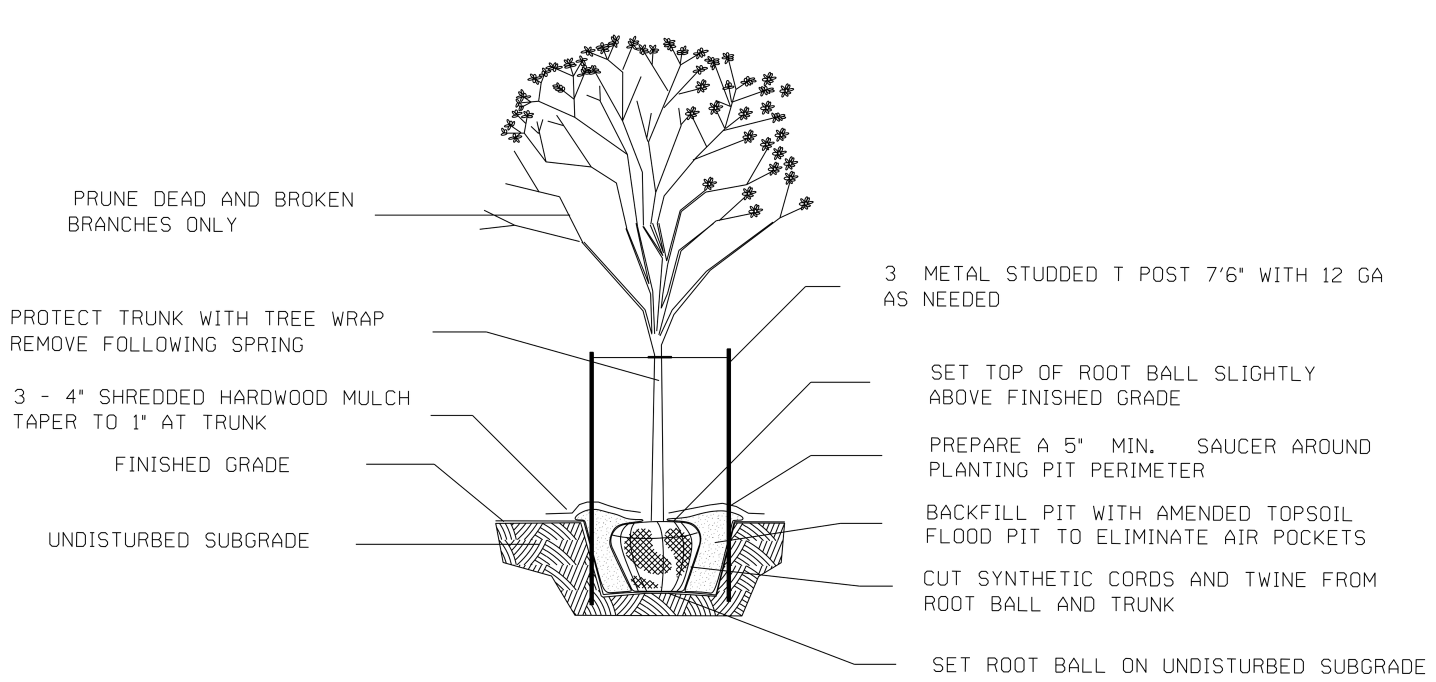

TREE PLANTING DETAIL
NOT TO SCALE USE ONLY NORTHERN ILLINOIS GROWN NURSERY STOCK

GENERAL NOTES

1. ALL PLANT MATERIAL SHALL BE NORTHERN ILLINOIS NURSERY GROWN TO ASSURE CLIMATIC AND SOIL SIMILARITY. ALL MATERIAL SHALL BE BALLED AND BURLAP PER AMERICAN STANDARD FOR NURSERY STOCK BY THE AMERICAN ASSOCIATION OF NURSERYMEN, INC. PERENNIAL AND GROUND COVER SHALL BE CONTAINER GROWN.
2. ALL BEDS SHALL RECEIVE 3-4'' OF FINELY SHREDDED HARDWOOD MULCH GROUND COVER BEDS SHALL BE TREATED WITH TRFLAN PRE-EMERGENT HERBICIDE, ALL OTHER BEDS SHALL RECEIVE RONSTAR 5g OR SIMILAR ALL TREES SHALL RECEIVE PRE-EMERGENT HERBICIDE FOR WEED CONTROL. 6'' OF FINELY SHREDDED HARDWOOD MULCH. ALL LANDSCAPE SPOILS SHALL BE REMOVED FROM THE SITE BY THE CONTRACTOR.
3. OWNER SHALL PROVIDE SUFFICIENT WATER FOR THE CONTRACTOR TO MAINTAIN THE PLANT MATERIAL, SEED AND SOD AREAS. CONTRACTOR SHALL WATER SOD UNTIL THE TURF HAS BECOME ADEQUATELY ESTABLISHED CONTRACTOR SHALL WARRANTEE ALL MATERIAL AND LABOR FOR A PERIOD OF TWO YEARS FROM ACCEPTANCE OF ALL WORK. OWNER TO PROVIDE ALL SUPPLEMENTAL WATERING AND PROPER CARE AND MAINTENANCE OF ALL MATERIAL AFTER CONTRACTOR'S INITIAL CARE
4. QUANTITY LISTS ARE SUPPLIED AS A CONVENIENCE. THE CONTRACTOR SHALL VERIFY ALL QUANTITIES ON-SITE. THE CONTRACTOR SHALL VERIFY LOCATIONS OF ALL UNDERGROUND UTILITIES PRIOR TO DIGGING.
5. PLANTING BEDS SHALL BE ELEVATED SLIGHTLY TO INSURE PROPER DRAINAGE. ALL ROOT BALLS OF TREES SHALL BE ELEVATED ABOVE FINISHED GRADE. ALL GRADING SHALL PROVIDE SLOPES WHICH ARE SMOOTH, CONTINUOUS AND HAVE POSITIVE DRAINAGE IN ALL AREAS.
6. CONTRACTOR SHALL BE RESPONSIBLE FOR PROVIDING TEMPORARY EROSION CONTROL FOR SOIL AREAS DUE TO SLOPE CONDITIONS. CONTRACTOR SHALL MAINTAIN ALL EROSION CONTROL STRUCTURES, FENCES, DITCH CHECKS, AND INLET PROTECTORS UNTIL ADEQUATE VEGETATION HAS BEEN ESTABLISHED
7. EXCAVATED MATERIALS IN EXCESS OR THOSE NOT REQUIRED OR UNSUITABLE FOR RE-USE SHALL BE DISPOSED OF OFF SITE AT CONTRACTORS EXPENSE. CONTRACTOR SHALL REMOVE ALL DEBRIS DAILY AND MAINTAIN THE SITE IN A NEAT AND SAFE CONDITION.
8. SOIL TESTS SHALL BE MADE TO DETERMINE THE EXACT REQUIREMENTS FOR BOTH SOIL AMENDMENTS AND FERTILIZER. SOIL TESTS SHALL BE CONDUCTED BY A GOVERNMENT LABORATORY OR RECOGNIZED COMMERCIAL LABORATORY, COST OF WHICH SHALL BE BORNE BY THE CONTRACTOR. CONTRACTOR IS RESPOSIBLE FOR MATERIAL COST AND APPLICATION OF TESTING LABORATORY'S RECOMMENDATIONS.
9. LANDSCAPE CONTRACTOR SHALL PROVIDE THE OWNER WITH AN EQUIPMENT AND LABOR RATE SCHEDULE. THIS LIST SHALL INCLUDE COST OF TOPSOIL AND LANDSCAPE DEBRIS/SPOILS REMOVAL WITH SQUARE FOOT COST FOR TURF LANDSCAPE CONTRACTOR SHALL RESTORE ALL RESTORATION (SOD AND SEED). TURF AREAS DAMAGED DUE TO CONSTRUCTION ON AND OFF SITE AT THE AGREED RATES TO RESTORE TO EXISTING CONDITIONS.
10. LANDSCAPE CONTRACTOR SHALL FOLLOW ALL LOCAL AND MUNICIPAL CODES AND REQUIREMENTS. CONTRATOR SHALL SECURE ALL REQUIRED PERMITS AS NECESSARY TO COMPLETE THE SCOPE OF THE JOB.

RAIN GARDEN PLANT LIST

CALAMAGROSTIS CANADENSIS (BLUE JOINT GRASS)
CAREX LACUSTRIS (LAKE SEDGE)
CAREX SLIPATA (AWL-FRUITED SEDGE)
CARAX STRICTA (TUSSOCK SEDGE)
CARAX VULPINOIDES (FOX SEDGE)
ELEOCHARIS ACICULORIS (NEEDLE SPIKE RUSH)
ELECOCHARIS OBTUSA (BLUNT SPIKE RUSH)
ELYMUS CANADENSIS (WILD RYE)
GLYCERIA STRIATA (FOWL MANNA GRASS)
JUNCUS TENUIS (SLENDER RUSH)
JUNCUS TORREYI (TORREY'S RUSH)
LEERSIA ORYZOIDES (RICE CUT GRASS)
PANICUM VIRGATUM (SWITCH GRASS)
SCIRPUS ACUTUS (HARD STEM BULRUSH)
SCRIPUS ATROVIRENS (DARK GREEN RUSH)
SPARTINA PECTINATA (CORD GRASS)
ASTER AZUREUS (SKY BLUE ASTER)
COREOPSIS PALMATA (PRAIRIE COREOPSIS)
LIATRIS ASPERA (ROUGH BLAZING STAR)
RATIBIDA PINNATA (YELLOW CONEFLOWER)
SOLIDAGO RIGIDA (RIGID GOLDENROD)
VERONICASTRUN VIRGINICUM (CULVERS ROOT)

PLANT LIST

KEY	NAME BOTANICAL/COMMON	SIZE	QUANTITY
AS	ACER SACCHARUM 'CRESCENDO' CRESCENDO SUGAR MAPLE	3"	2
GB	GINKGO BILOBA "AUTUMN GOLD' AUTUMN GOLD GINKGO	3"	4
GD	GYMNOCLADUS DIOICUS 'ESPRESSO' ESPRESSO KENTUCKY COFFEE TREE	4"	2
PAE	PLATANUS ACERIFOLIA 'MORTON' CIRCLE' EXCAMATION LONDON PLANETREE	3"	3
TC	TILIA CORDATA 'GREENSPIRE' GREENSPIRE LINDEN	3"	2
TD	TAXODIUM DISTICHUM BALD CYPRESS	4"	2
HM	HEPTACODIUM MICNOIDES SEVEN SON FLOWER	8'	4
CJ	CERCIDIPHYLLUM JAPONICA KATSURA TREE	3"	4
OV	OSTRYA VIRGINIANA AMERICAN HOPHORNBEAM	3"	5
IGS	ILEX GLABRA 'SHAMROCK' SHAMROCK INKBERRY	18"	8
TT	TAXUS X MEDIA 'TAUNTONII' TAUNTON YEW	24"	21
CAF	CORNUS STOLONIFERA 'ARTIC FIRE' ARTIC FIRE DOGWOOD	7 GAL	7
DL	DIERVILLA LONICERA DWARF BUSH HONEYSUCKLE	5 GAL	30
FG	FOTHERGILLA GARDENII DWARF FOTHERGILLA	3 GAL	5
HAI	HYDRANGEA ARBORESCENS 'INCREDIBALL INCREDIBALL HYDRANGEA	5 GAL	21
SP	SYRINGA PATULA 'MISS KIM' MISS KIM LILAC	36"	7
VP	VIBURNUM PRUNIFOLIA BLACKHAW VIBURNUM	5'	3
VD	VIBURNUM DENTATUM ARROWWOOD VIBURNUM	4'	15
ASB	ALLIUM 'SUMMER BEAUTY' SUMMER BEAUTY ONION	1 GAL	51
CA	CALAMAGROSTIS X ACUTIFLORA 'KARL FOERSTER' FEATHER REED GRASS	3 GAL	6
CL	CHASMANTHIUM LATIFOLIUM NORTHERN SEA OATS	1 GAL	83
CMO	CAREX MUSKINGUMENSIS 'OEHME' OEHME PALM SEDGE	1 GAL	31
HHR	HEMEROCALIS 'HAPPY RETURNS' HAPPY RETURNS DAYLILY	1 GAL	166
PVHM	PANICUM VIRGATUM 'HEAVY METAL HEAVY METAL SWITCH GRASS	3 GL	18
SA	SESLERIA AUTUMNALIS AUTUMN MORE GRASS	1 GAL	128
SH	SPOROBOLUS HETEROLEPIS PRAIRIE DROPSEED	1 GAL	12

ISSUE	REVISIONS	DATE
5.	ISSUED FOR BIDDING	2/21/19
4.	PER VILLAGE OF OSWEGO, IDOT, FOX METRO	2/15/19
3.	REVISIONS PER VILLAGE OF OSWEGO REVIEW	1/11/19
2.	REVISIONS PER VILLAGE OF OSWEGO REVIEW	12/4/18
1.	REVISIONS PER VILLAGE OF OSWEGO REVIEW	11/21/18

PROJECT STAFF
PROJECT MANAGER:
ENGINEER:
ENGINEER:
ENGINEER:
TECHNICIAN:
TECHNICIAN:

TROTTER and ASSOCIATES, INC.
ENGINEERS AND SURVEYORS
40W201 Wasco Road, Suite D
St. Charles, Il. 60175
Ph.: 630-587-0470 • Fax: 630-587-0475

The Reserve at Hudson Crossing - Roadway Improvements
Landscape Details, Notes and Plant List
Oswego, Kendall County, Illinois

Project No.: SH0002
File Name: 84_LS_DETAILS.dgn
Issue Date: 2/21/2019
Scale: N.T.S.
Sheet Number
84

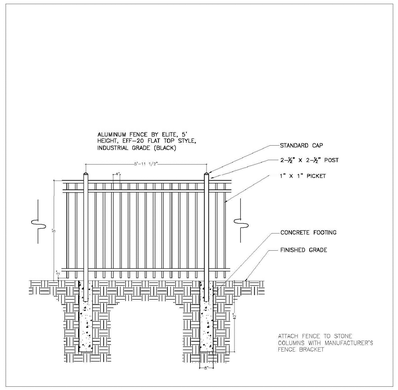

A 15 ORNAMENTAL FENCE DETAIL
NOT TO SCALE

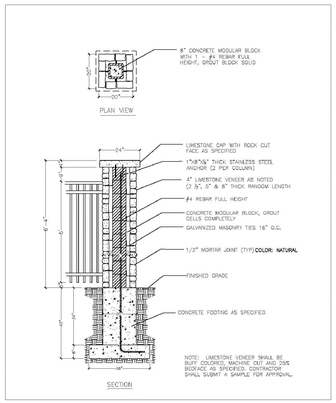

B 15 STONE FENCE COLUMN DETAIL
WITH 5' HIGH FENCE
NOT TO SCALE

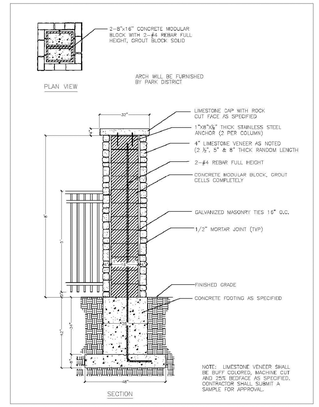

C 15 STONE ARCH COLUMN DETAIL
NOT TO SCALE

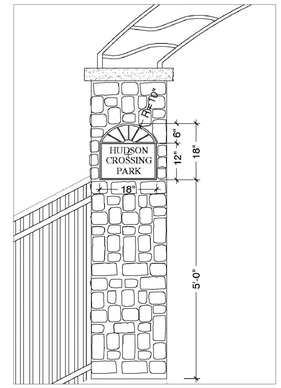

D 15 BRONZE PLAQUE DETAIL
FURNISHED BY OWNER
NOT TO SCALE

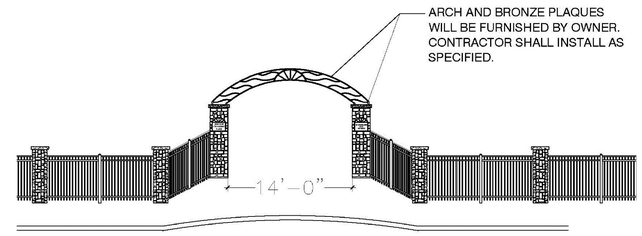

MAIN ENTRANCE ELEVATION
NOT TO SCALE

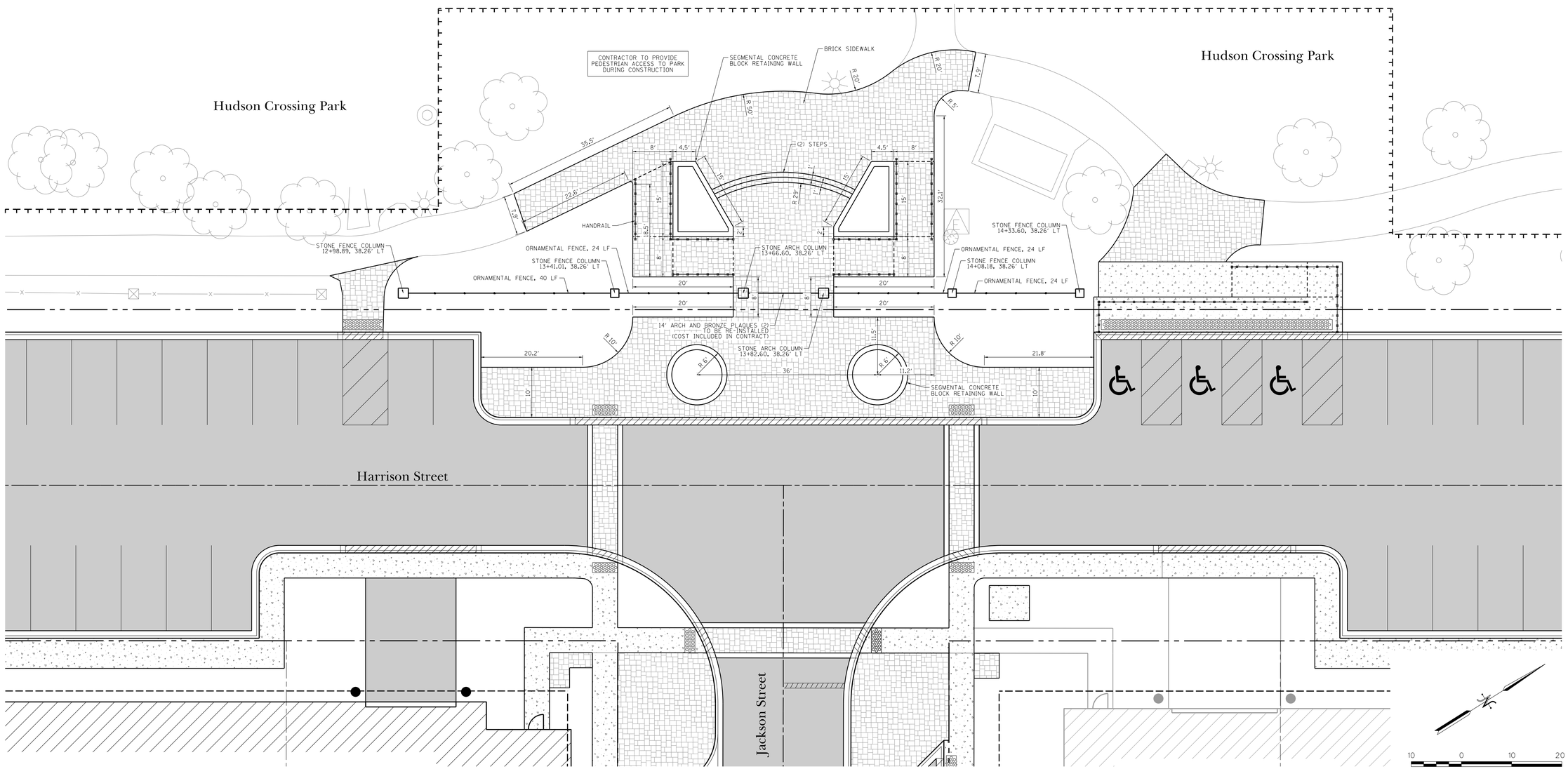

ISSUE	REVISIONS	DATE
5.	ISSUED FOR BIDDING	2/21/19
4.	PER VILLAGE OF OSWEGO, IDOT, FOX METRO	2/15/19
3.	REVISIONS PER VILLAGE OF OSWEGO REVIEW	1/11/19
2.	REVISIONS PER VILLAGE OF OSWEGO REVIEW	12/4/18
1.	REVISIONS PER VILLAGE OF OSWEGO REVIEW	11/21/18

PROJECT STAFF
PROJECT MANAGER:
ENGINEER:
ENGINEER:
ENGINEER:
TECHNICIAN:
TECHNICIAN:

TROTTER ASSOCIATES, INC.
ENGINEERS AND SURVEYORS
400 W. Veterans Parkway, Suite D
Yorkville, Illinois 60560
Ph. 630-387-0170 • Fax: 630-387-0175

The Reserve at Hudson Crossing - Roadway Improvements

Hudson Crossing Park Entrance Plan

Oswego, Kendall County, Illinois

Project No.: SH0002
File Name: 85_PARK_ENTRANCE.dgn
Issue Date: 2/21/2019
Scale: 1" = 10'
Sheet Number
85

RESIDENTIAL DRIVEWAY APPROACH DETAIL

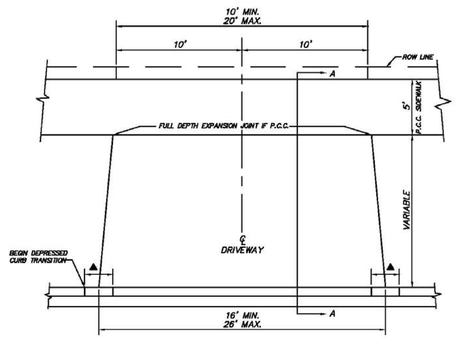

▲ – TRANSITION FROM FULL CURB IN 2 LINEAL FEET.

– DRIVEWAY APPROACH SHALL MEET CURB AND GUTTER AT A POINT BETWEEN FULL CURB AND ONE-HALF CURB HEIGHT.

– DRIVEWAY FLARE SHALL BE SYMETRIC ABOUT THE DRIVEWAY CENTERLINE UNLESS OTHERWISE APPROVED BY THE ENGINEER.

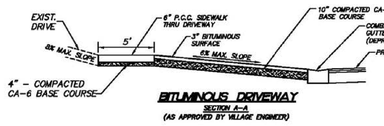

BITUMINOUS DRIVEWAY
SECTION A–A
(AS APPROVED BY VILLAGE ENGINEER)

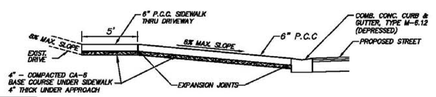

P.C.C. DRIVEWAY
SECTION A–A

REVISIONS	
INITIAL	DATE
JPH	MARCH 2007

OSW–R–2

CONCRETE CURB AND GUTTER DETAIL

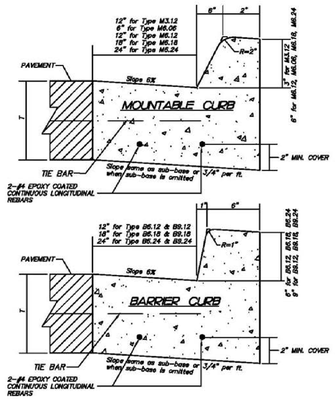

THICKNESS – T – Thickness of pavement. When curb & gutter is constructed adjacent to flexible pavement, the vertical thickness of the gutter flag shall be 9". Also, tie bars shall be omitted.

DRAINAGE OPENINGS – At all locations where metal casings are to be incorporated in the curb and gutter, a 1" thick preformed joint filler, conforming to the cross sections of the curb and gutter, shall be installed in the curb and gutter a distance of 10 ft. from each side of the metal casing. When the width of the metal casing is less than the width of the curb and gutter, 2 – No. 4 continuous long rebars & reverse pitch (L = 12" + casing length + 12") shall be incorporated in the continuous portion of concrete gutter in front of the casting.

TRANSITIONS – The transition from full height curb to depressed curb shall be made at the rate of 3" per foot of length or flatter.

JOINTS – In addition to the requirements of the Standard Specifications, joints shall be constructed as follows.

Contraction joints and expansion joints shall be installed in the curb and gutter in prolongation with joints in adjacent P.C.C. pavement or base course.

When curb and gutter is constructed adjacent to flexible pavement, a 1" thick preformed expansion joint filler, conforming to the cross section of the curb and gutter shall be installed at points of curvature for short radius curves and at construction joints. Contraction joints shall be placed between expansion joints at distances not to exceed 10 feet.

All expansion joints shall be provided with a 1 1/4 dia. X 18" epoxy coated dowel bar conforming to the Standard Specifications. The dowel bar shall be fitted with a cap having a pinched stop that will provide 1" of expansion.

All construction joints shall be provided with 1/2" dia. deformed epoxy coated steel tie bars 30" long conforming to AASHTO M–31 of M–53. Tie bars shall be placed on 9'± centers (minimum 2 per joint).

REVISIONS	
INITIAL	DATE
JPH	MARCH 2007

OSW–R–6

REVERSE CONCRETE CURB AND GUTTER

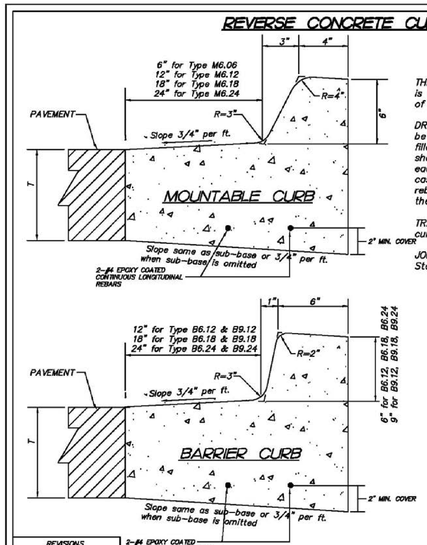

THICKNESS – T – Thickness of pavement. When curb & gutter is constructed adjacent to flexible pavement, the vertical thickness of the gutter flag shall be 9". Also, tie bars shall be omitted.

DRAINAGE OPENINGS – At all locations where metal casings are to be incorporated in the curb and gutter, a 1" thick preformed joint filler, conforming to the cross sections of the curb and gutter, shall be installed in the curb and gutter a distance of 10 ft. from each side of the metal casing. When the width of the metal casing is less than the width of the curb and gutter, 2 – No. 4 rebars (L = 12" + casing length + 12") shall be incorporated in the continuous portion of concrete gutter in front of the casting.

TRANSITIONS – The transition from full height curb to depressed curb shall be made at the rate of 3" per foot of length or flatter.

JOINTS – In addition to the requirements of Article 606.06 of the Standard Specifications, joints shall be constructed as follows.

Contraction joints and expansion joints shall be installed in the curb and gutter in prolongation with joints in adjacent P.C.C. pavement or base course.

When curb and gutter is constructed adjacent to flexible pavement, a 1" thick preformed expansion joint filler, conforming to the cross section of the curb and gutter shall be installed at points of curvature for short radius curves and at construction joints. Contraction joints shall be placed between expansion joints at distances not to exceed 25 feet.

All expansion joints shall be provided with a 1 1/4 dia. X 18" coated smooth dowel bar conforming to Article 1006.11(b) of the Standard Specifications. The dowel bar shall be fitted with a cap having a pinched stop that will provide 1" of expansion.

All construction joints shall be provided with 1/2" dia. deformed steel tie bars 30' long conforming to AASHTO M–31 of M–53. Tie bars shall be placed on 9'± centers (minimum 2 per joint).

REVISIONS	
INITIAL	DATE
JPH	MARCH 2007

RCURB

STREET & TRAFFIC IDENTIFIERS PLAN SAMPLE LEGEND

(A) R1–1 STOP SIGN 30" X 30"

(B) W4–4p CROSS TRAFFIC DOES NOT STOP 24" X 12"

(C) R2–1 SPEED LIMIT 24" X 30"

(D) R3–1 TURN PROHIBITION 24" X 24"

(E) R5–1 DO NOT ENTER 30" X 30"

(F) R7–1d NO PARKING ANYTIME 12" X 18"

(G) W11–2 PEDESTRIAN CROSSING 30" X 30"

(H) S1–1 SCHOOL ADVANCED WARNING 36" X 36"; W16–7P DIAGONAL ARROW 24" X 12"

(I) OSW–STUBSIGN FUTURE STREET CONNECTION 24" X 36"

(J) OR WHITE ARROWS

(K) 6" WHITE CROSSWALK STRIPING

(L) 24" WHITE STOP BAR

NOTES:

1. ALL SIGNS & STRIPING SHALL CONFORM TO THE LATEST EDITION OF THE M.U.T.C.D., IDOT DISTRICT 3 PAVEMENT MARKING STANDARDS & VILLAGE APPROVED DETAILS.
2. SIGNS & STRIPING LEGEND MAY BE MODIFIED AS NEEDED ON A PER PROJECT BASIS.

REVISIONS	
INITIAL	DATE
JPH	MARCH 2007
JPH	JUNE 2007

OSW–R–11

SIDEWALK DETAIL

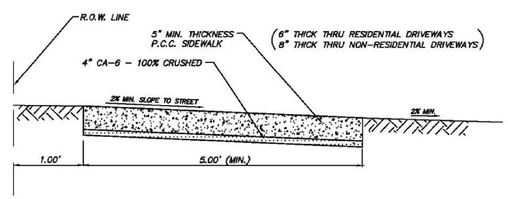

NOTES:

ALL SIDEWALKS SHALL HAVE CONTRACTION JOINTS AT 5' INTERVALS AND EXPANSION JOINTS AT 50' INTERVALS. MINIMUM SIDEWALKS AS PER VILLAGE OF OSWEGO SUBDIVISION CONTROL ORDINANCE – FIGURE 1

REVISIONS	
INITIAL	DATE
JPH	MARCH 2007

OSW–R–4

TRENCH BEDDING/BACKFILLING CROSS SECTION

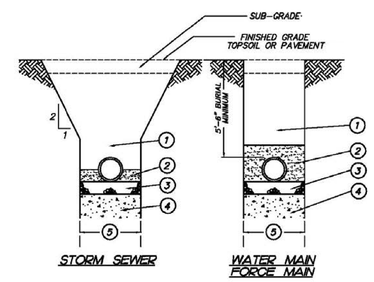

(1) Trench backfill under pavement, curb and gutter as indicated in road subgrades and within 2 feet of any proposed curb and gutter or sidewalk. Mechanically compacted backfill of excavated materials in other locations if approved by the Village Engineer. Refer to trench backfill special provisions for materials and compaction requirements.

(2) WATER MAIN FORCE MAIN (D.I.P.)
Compacted granular material CA–7 to 4" above top of pipe.

(2) STORM SEWER
Compacted granular backfill material CA–7 to spring line of pipe

(3) 4" compacted granular bedding, CA–7 gradation.

(4) Unsuitable material to be removed where directed by Engineer and replaced with suitable material and compacted.

(5) Trench Width – Pipe O.D. + 12" minimum
Pipe O.D. + 18" maximum

NOTES:

1. PVC pipe conforming to the SDR specified in the plans shall be installed to the latest revised specification requirements of ASTM D–2321 using either compacted Class I or Class II granular embedment materials for bedding, haunching and initial backfill of 12 inches over the top of pipe to provide the necessary support for the pipe so that the maximum deflection does not exceed 5% of the pipe's original internal diameter.
2. All CA–7 to be IDOT approved or meet IDOT specifications.

REVISIONS	
INITIAL	DATE
JPH	MARCH 2007

ISSUE	REVISIONS	DATE
5.	ISSUED FOR BIDDING	2/21/19
4.	PER VILLAGE OF OSWEGO, IDOT, FOX METRO	2/15/19
3.	REVISIONS PER VILLAGE OF OSWEGO REVIEW	1/11/19
2.	REVISIONS PER VILLAGE OF OSWEGO REVIEW	12/4/18
1.	REVISIONS PER VILLAGE OF OSWEGO REVIEW	11/21/18

PROJECT STAFF
PROJECT MANAGER:
ENGINEER:
ENGINEER:
ENGINEER:
TECHNICIAN:
TECHNICIAN:

TROTTER ASSOCIATES, INC.
ENGINEERS AND SURVEYORS
40W201 Wilson Road, Suite D
St. Charles, Illinois 60175
Ph: 630-587-0170 • Fax: 630-587-0175

The Reserve at Hudson Crossing - Roadway Improvements
Village of Oswego Standard Details
Oswego, Kendall County, Illinois

Project No.: SH0002
File Name: 86_DTL_OSWEGO.dgn
Issue Date: 2/21/2019
Scale: N.T.S.
Sheet Number
86

CATCH BASIN TYPE A

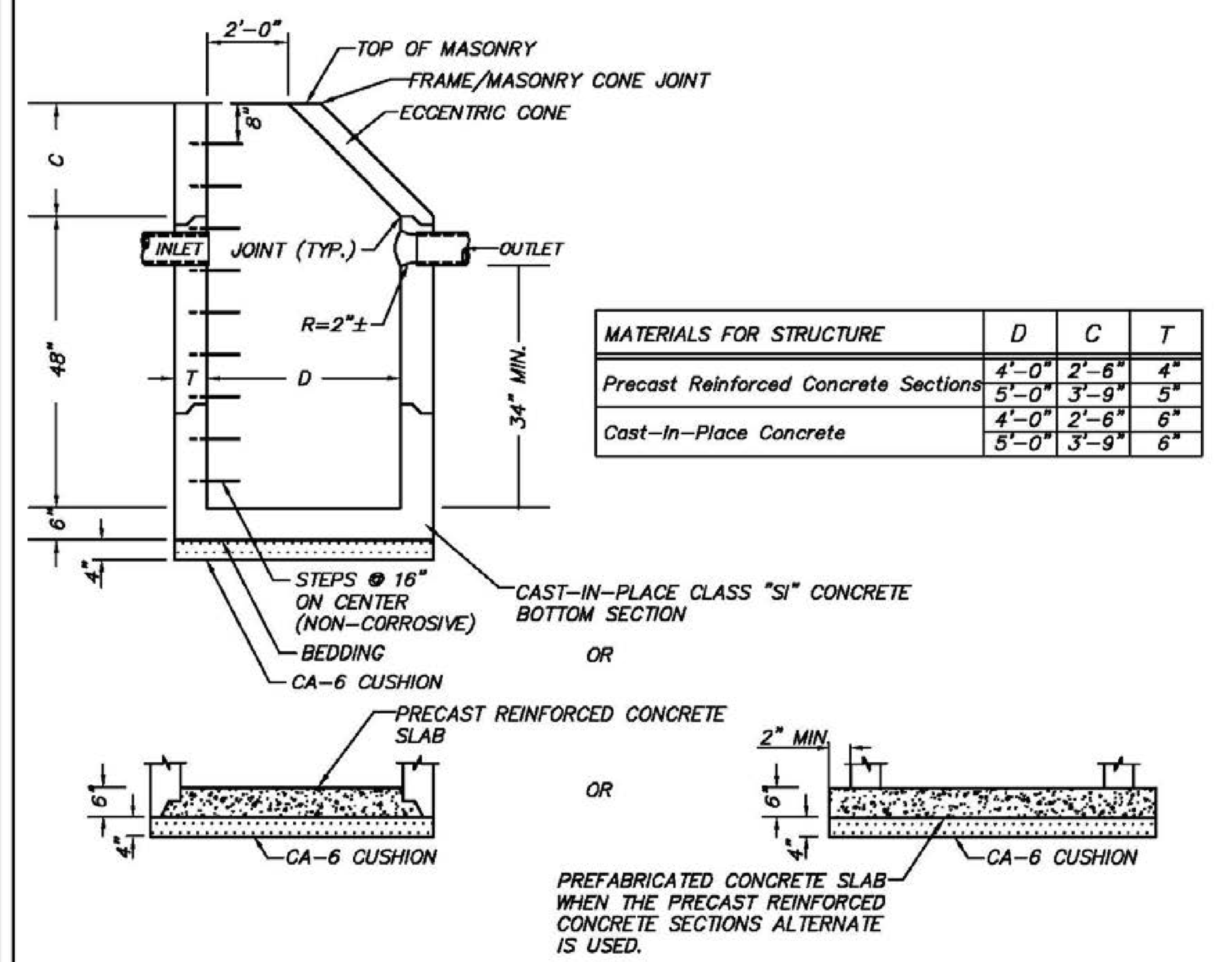

MATERIALS FOR STRUCTURE	D	C	T
Precast Reinforced Concrete Sections	4'-0"	2'-6"	4"
	5'-0"	3'-9"	5"
Cast-In-Place Concrete	4'-0"	2'-6"	6"
	5'-0"	3'-9"	6"

All Catch Basins shall be 4'-0" in diameter unless otherwise noted on plans.

In addition to the requirements the standard Specifications the contract unit price for Catch Basins, Type A shall include the CA-6 cushion when required, furnishing and placing steps when required, and furnishing and compacting the specified backfill material.

Dimension "C" for Precast Reinforced Concrete sections may vary from the dimension given to plus 6 inches.

External chimney seal to be installed on catch basin frame/ masonry cone joint. (Not required for catch basins in grassy areas).

REVISIONS	
INITIAL	DATE
JPH	MARCH 2007

OSW-SS-2

CATCH BASIN TYPE C

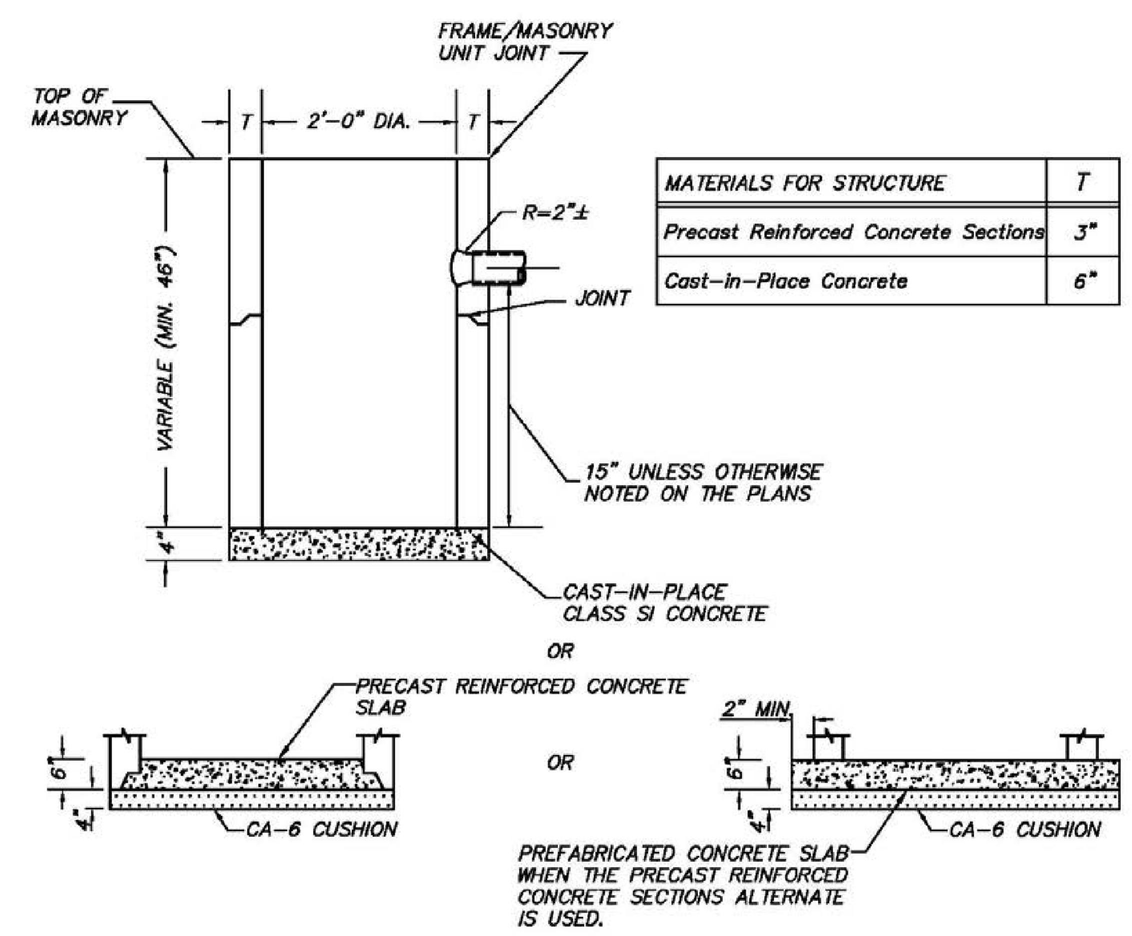

MATERIALS FOR STRUCTURE	T
Precast Reinforced Concrete Sections	3"
Cast-in-Place Concrete	6"

In addition to the requirements of the standard Specifications the contract unit price for Catch Basins, Type C shall include the CA-6 cushion when required, and furnishing and compacting the specified backfill material.

External chimney seal to be installed on catch basin frame/masonry unit joint (Not required for storm manholes in grassy areas).

REVISIONS	
INITIAL	DATE
JPH	MARCH 2007

OSW-SS-3

STORM MANHOLE DETAIL TYPE A

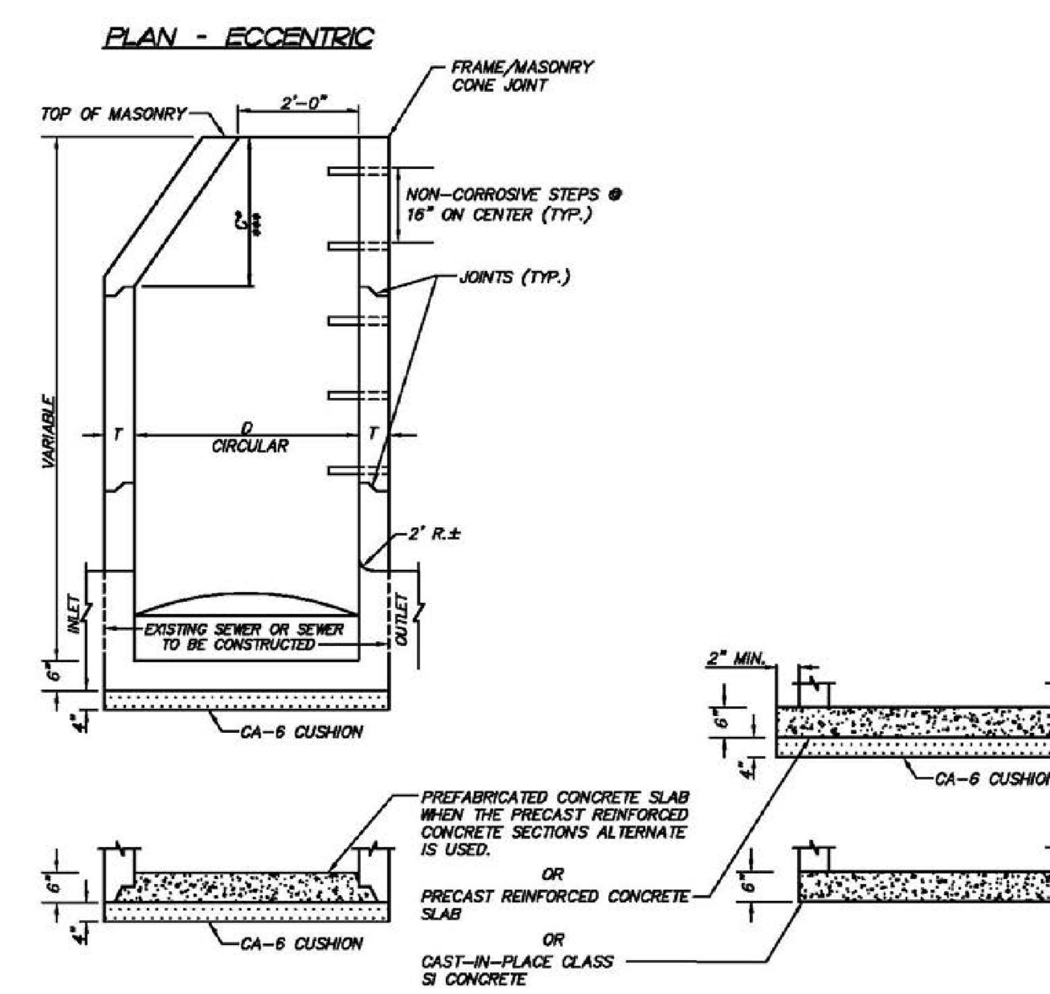

MATERIALS FOR STRUCTURE	D	C	T (MIN)
PRECAST REINFORCED CONCRETE SECTIONS	4'-0"	2'-6"	4"
	5'-0"	3'-9"	5"
CAST-IN-PLACE CONCRETE SECTIONS	4'-0"	2'-6"	6"
	5'-0"	3'-9"	6"

NEENAH No. R-1712 (CLOSED LID)
NEENAH No. R-2502 (OPEN LID)

NOTES:

CONCRETE SECTIONS MAY VARY FROM THE DIMENSION GIVEN TO PLUS 6 INCHES.

* DIMENSION "C" FOR PRECAST REINFORCED HEREON ARE TYPICAL. STEPS OF OTHER DESIGN AND MATERIAL THAT WILL CONFORM TO THE MINIMUM REQUIREMENTS OF THE STEPS SHOWN, MAY BE USED WHEN APPROVED BY THE ENGINEER.

*** FOR OPTIONAL PRECAST CONCRETE FLAT SLAB TOP REFER TO STANDARD 602601

IN ADDITION TO THE REQUIREMENTS OF ART. 602 OF THE STANDARD

FOR MANHOLES, TYPE A SHALL INCLUDE THE CA-6 CUSHION WHEN REQUIRED, FURNISHING AND INSTALLING STEPS WHEN REQUIRED, AND FURNISHING AND COMPACTING THE SPECIFIED BACKFILL SPECIFICATIONS, THE CONTRACT UNIT PRICE MATERIAL.

NON-CORROSIVE PLASTIC COATED CAST IRON STEPS SHALL BE GRAY IRON CONFORMING TO THE REQUIREMENTS OF ART. 1006.14 OF THE STANDARD SPECIFICATIONS.

STEPS SHALL BE EMBEDDED INTO WALL A MINIMUM OF 3 INCHES. STEPS SHALL NOT BE EXTENDED ON THE OUTSIDE.

EXTERNAL CHIMNEY SEAL TO BE INSTALLED ON MANHOLE FRAME/MASONRY CONE JOINT. (NOT REQUIRED FOR STORM MANHOLES IN GRASSY AREAS).

REVISIONS	
INITIAL	DATE
JPH	MARCH 2007

OSW-SS-6

COMMON TRENCH FOR WATER AND SANITARY SEWER SERVICES

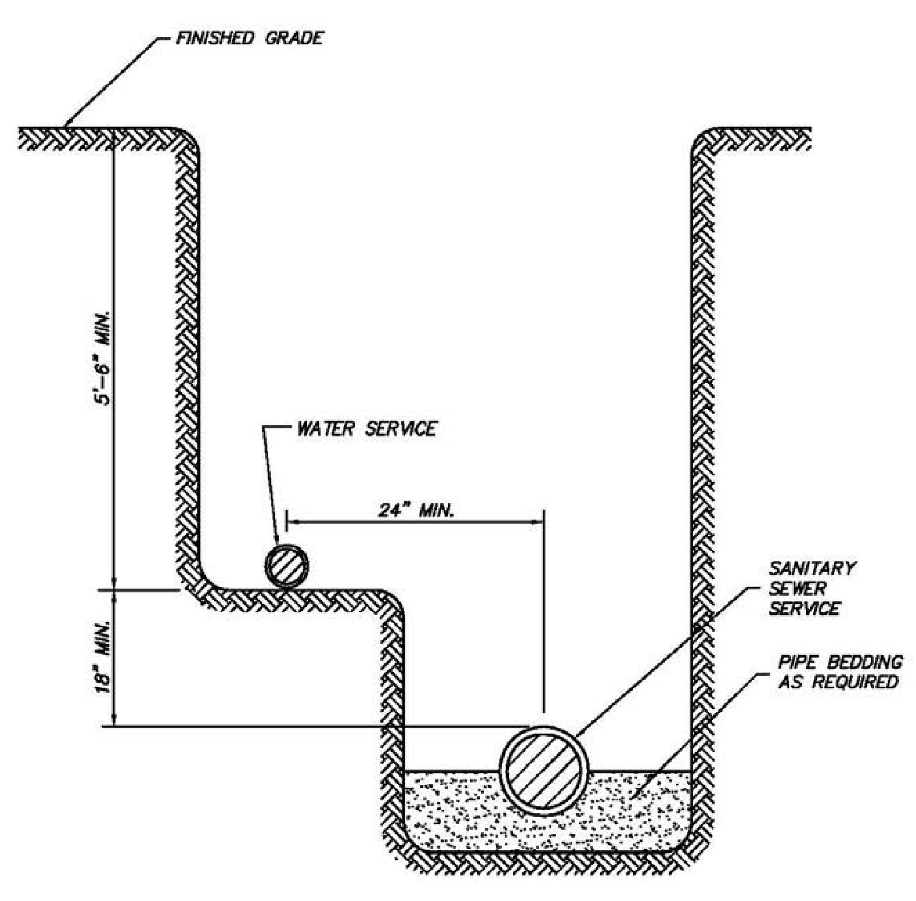

THE WATER SERVICE PIPING AND BUILDING SEWER PIPING MAY BE INSTALLED IN A COMMON TRENCH PROVIDED THAT THE WATER SERVICE PIPE IS PLACED ON A SHELF A MINIMUM OF EIGHTEEN (18) INCHES ABOVE AND TWENTY-FOUR (24) INCHES HORIZONTALLY FROM THE BUILDING SEWER PIPING.

REVISIONS	
INITIAL	DATE
JPH	MARCH 2007

OSW-U-2

WATER AND SEWER SEPARATION REQUIREMENTS DETAIL

PROPOSED WATER MAIN BELOW EXISTING SEWER LINE WITH 18 MINIMUM SEPARATION.

NOTES:

1. OMIT SELECT GRANULAR CRADLE AND GRANULAR BACKFILL TO ONE (1) FOOT OVER TOP OF PIPE AND USE SELECT EXCAVATED MATERIAL (CLASS IV) AND COMPACT FOR 10 FEET ON EITHER SIDE OF SEWER LINE.
2. IF SELECT GRANULAR BACKFILL EXISTS, REMOVE WITHIN WIDTH OF EXISTING SEWER LINE TRENCH AND REPLACE WITH SELECT EXCAVATED MATERIAL (CLASS IV) AND COMPACT.
3. PROVIDE ADEQUATE SUPPORT FOR EXISTING SEWER LINE TO PREVENT DAMAGE DUE TO SETTLEMENT.
4. CLASS IV MATERIAL SHALL BE COMPACTED TO 95% OF STANDARD PROCTOR MAXIMUM DENSITY.

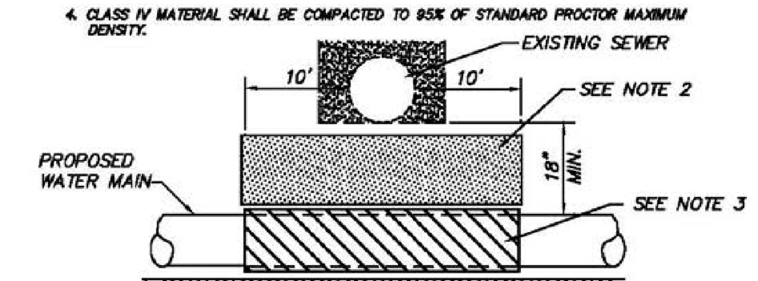

PROPOSED WATER MAIN BELOW EXISTING SEWER LINE WITH LESS THAN 18" MINIMUM SEPARATION.

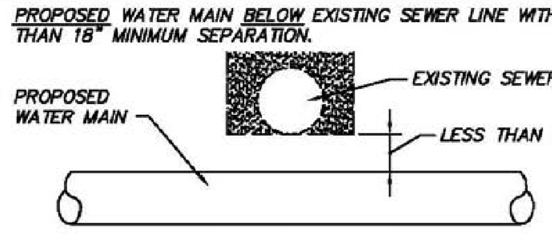

NOT ALLOWED
MUST MAINTAIN 18" VERTICAL SEPARATION

PROPOSED SEWER LINE BELOW EXISTING WATER MAIN WITH 18" MINIMUM SEPARATION.

NOTES:

1. PROVIDE ADEQUATE SUPPORT FOR EXISTING WATER MAIN TO PREVENT DAMAGE DUE TO SETTLEMENT OF SEWER TRENCH.
2. MAINTAIN 18" MINIMUN VERTICAL SEPARATION FOR 10 FEET HORIZONTALLY.

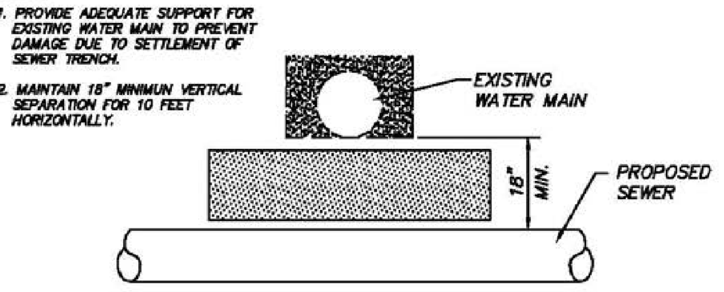

PROPOSED SEWER LINE BELOW EXISTING WATER MAIN WITH LESS THAN 18" SEPARATION.

NOTES:

1. OMIT SELECT GRANULAR CRADLE AND GRANULAR BACKFILL TO ONE (1) FOOT OVER TOP OF PIPE AND USE SELECT EXCAVATED MATERIAL (CLASS IV) AND COMPACT FOR 10 FEET ON EITHER SIDE OF WATER MAIN.

2a. CONSTRUCT 10 FEET OF PROPOSED SEWER WITH WATERMAIN QUALITY PIPE AND PRESSURE TEST, OR;

2b. USE 10 FEET OF CASING FOR PROPOSED SEWER AND SEAL ENDS OF CASING.

3. POINT LOADS SHALL NOT BE ALLOWED BETWEEN SEWER OR SEWER CASING AND WATER MAIN.
4. PROVIDE ADEQUATE SUPPORT FOR EXISTING WATER MAIN TO PREVENT DAMAGE DUE TO SETTLEMENT OF SEWER TRENCH.
5. CLASS IV MATERIAL TO BE COMPACTED TO 95% OF STANDARD PROCTOR MAXIMUM DENSITY.

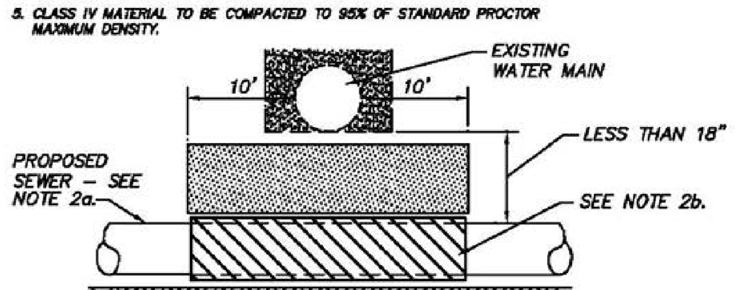

REVISIONS	
INITIAL	DATE
JPH	MARCH 2007

▲ TAKEN FROM THE STANDARD SPECIFICATIONS FOR WATER AND SEWER MAIN CONSTRUCTION IN ILLINOIS – SEE PAGES 156 – 159

OSW-U-4

WATER AND SEWER SEPARATION REQUIREMENTS DETAIL

EXISTING WATERMAIN BELOW PROPOSED SEWER LINE WITH 18" MINIMUM SEPARATION.

NOTE: CLASS IV MATERIAL TO BE COMPACTED TO 95% OF STANDARD PROCTOR MAXIMUM DENSITY.

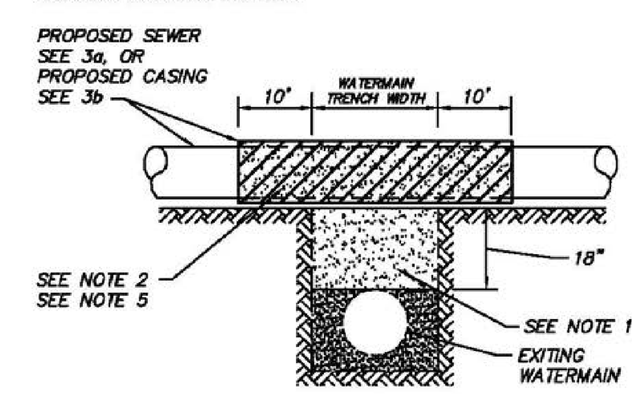

NOTES:

1. IF SELECT GRANULAR BACKFILL EXISTS; REMOVE WITHIN WIDTH OF PROPOSED SEWER TRENCH AND REPLACE WITH SELECT EXCAVATED MATERIAL (CLASS IV) AND COMPACT.
2. OMIT SELECT GRANULAR CRADLE AND GRANULAR BACKFILL TO ONE (1) FOOT OVER TOP OF PIPE AND USE SELECT EXCAVATED MATERIAL (CLASS IV) AND COMPACT FOR 10 FEET ON EITHER SIDE OF WATER MAIN.
3. a. CONSTRUCT 10 FEET OF PROPOSED SEWER WITH WATERMAIN QUALITY PIPE AND PRESSURE TEST, OR;
   b. USE 10 FEET OF CASING FOR PROPOSED SEWER AND SEAL ENDS OF CASING.
4. POINT LOADS SHALL NOT BE ALLOWED BETWEEN SEWER OR SEWER CASING AND WATER MAIN.
5. PROVIDE ADEQUATE SUPPORT FOR EXISTING WATERMAIN TO PREVENT DAMAGE DUE TO SETTLEMENT OF SEWER TRENCH.

PROPOSED WATERMAIN ABOVE EXISTING SEWER LINE WITH 18" MINIMUM SEPARATION.

NOTE: CLASS IV MATERIAL SHALL BE COMPACTED TO 95% OF STANDARD PROCTOR MAXIMUM DENSITY.

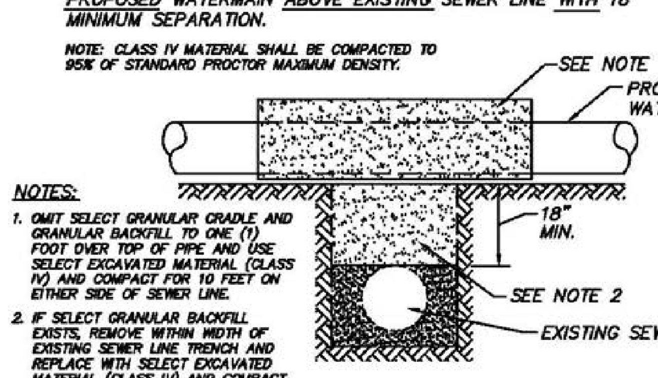

NOTES:

1. OMIT SELECT GRANULAR CRADLE AND GRANULAR BACKFILL TO ONE (1) FOOT OVER TOP OF PIPE AND USE SELECT EXCAVATED MATERIAL (CLASS IV) AND COMPACT FOR 10 FEET ON EITHER SIDE OF SEWER LINE.
2. IF SELECT GRANULAR BACKFILL EXISTS, REMOVE WITHIN WIDTH OF EXISTING SEWER LINE TRENCH AND REPLACE WITH SELECT EXCAVATED MATERIAL (CLASS IV) AND COMPACT.

PROPOSED WATER MAIN ABOVE EXISTING SEWER LINE WITH LESS THAN 18" SEPARATION.

NOTE: CLASS IV MATERIAL SHALL BE COMPACTED TO 95% OF STANDARD PROCTOR MAXIMUM DENSITY.

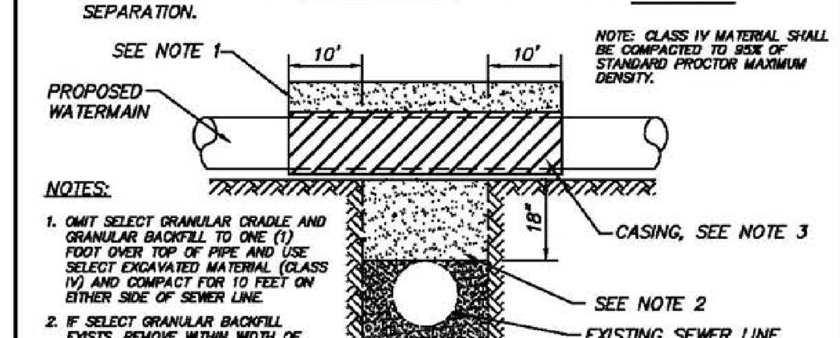

NOTES:

1. OMIT SELECT GRANULAR CRADLE AND GRANULAR BACKFILL TO ONE (1) FOOT OVER TOP OF PIPE AND USE SELECT EXCAVATED MATERIAL (CLASS IV) AND COMPACT FOR 10 FEET ON EITHER SIDE OF SEWER LINE.
2. IF SELECT GRANULAR BACKFILL EXISTS, REMOVE WITHIN WIDTH OF EXISTING SEWER LINE TRENCH AND REPLACE WITH SELECT EXCAVATED MATERIAL (CLASS IV) AND COMPACT.
3. USE A CASING FOR PROPOSED WATER MAIN AND SEAL ENDS OF CASING.
4. POINT LOADS SHALL NOT BE ALLOWED BETWEEN WATER MAIN OR WATERMAIN AND SEWER.

REVISIONS	
INITIAL	DATE
JPH	MARCH 2007

▲ TAKEN FROM THE STANDARD SPECIFICATIONS FOR WATER AND SEWER MAIN CONSTRUCTION IN ILLINOIS – SEE PAGES 156–159.

OSW-U-5

ISSUE	REVISIONS	DATE
5.	ISSUED FOR BIDDING	2/21/19
4.	PER VILLAGE OF OSWEGO, IDOT, FOX METRO	2/15/19
3.	REVISIONS PER VILLAGE OF OSWEGO REVIEW	1/11/19
2.	REVISIONS PER VILLAGE OF OSWEGO REVIEW	12/4/18
1.	REVISIONS PER VILLAGE OF OSWEGO REVIEW	11/21/18

PROJECT STAFF
PROJECT MANAGER:
ENGINEER:
ENGINEER:
ENGINEER:
TECHNICIAN:
TECHNICIAN:

TROTTER and ASSOCIATES, INC.
ENGINEERS AND SURVEYORS
40W201 Wasco Road, Suite D
St. Charles, Il. 60175
Ph.: 630-587-0470 • Fax: 630-587-0475

The Reserve at Hudson Crossing - Roadway Improvements
Village of Oswego Standard Details
Oswego, Kendall County, Illinois

Project No.: SH0002
File Name:
Issue Date: 2/21/2019
Scale:
Sheet Number
87

THRUST BLOCK INSTALLATION DETAIL

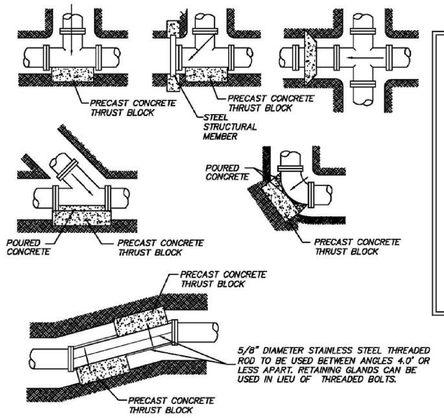

BEARING AREA (SQ. FT.)

PIPE SIZE	TEE/PLUG	90°	45°	22-1/2°	11-1/4°
6	4	2	1	1	1
8	6	4	3	1	1
10	7	5	3	2	1
12	8	6	4	3	2
14	12	9	6	4	3
16	15	12	7	5	3
18	18	15	9	5	4
24	40	30	15	10	5

ALL BLOCKING SHALL BE 12" PRE-CAST CONCRETE BLOCK AGAINST UNDISTURBED EARTH.

ALL BENDS OR ELBOWS GREATER THAN AND INCLUDING 11-1/4° SHALL HAVE THRUST BLOCKING.

REVISIONS

INITIAL	DATE
JPH	MARCH 2007

OSW-W-2

CURB BOX INSTALLATION DETAIL

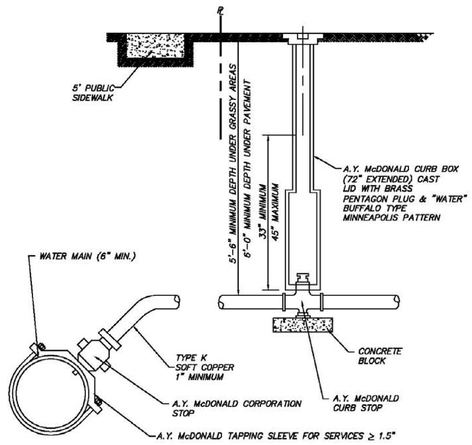

NOTES:

1. NO CORPORATION STOPS, SERVICE COPPERS, OR CURB BOXES MAY BE LOCATED UNDER PAVED AREAS INCLUDING DRIVES AND SIDEWALKS.
2. ALL WATER MAIN HARDWARE SHALL BE A.Y. McDONALD.
3. SERVICE TO BE CONTINUOUS WITHOUT JOINTS FROM CORPORATION STOP TO CURB STOP.
4. MULTIPLE TAPS INTO MAIN SHALL BE NO CLOSER THAN 2' APART.
5. TRENCH FROM MAIN TO BACK OF SIDEWALK TO BE COMPACTED TRENCH BACKFILL CA-6.

REVISIONS

INITIAL	DATE
JPH	MARCH 2007

OSW-W-3

FIRE HYDRANT INSTALLATION DETAIL

CLOW MEDALLION TYPE HYDRANT (5-1/4" BARREL)

WATEROUS PACER WB-67-250 FIRE HYDRANT (5-1/4" BARREL)

ALL AMERICAN FLOW CONTROL VALVES & HARDWARE AUXILLARY VALVE 6" GATE VALVE NO. A-2370-20 MODIFIED WEDGE RESILIENT SEAT

USE WATEROUS PACER WB-67-250 HYDRANT 6" TRENCH DEPTH, 6" MJ SHOE, 1-1/2" PENTAGON OPERATING NUT, OPEN LEFT, NATIONAL STANDARD NOZZLES, PAINTED RED

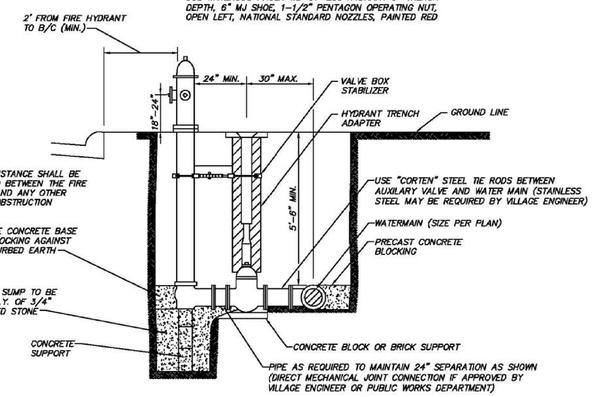

NOTE:
48" MIN. DISTANCE SHALL BE MAINTAINED BETWEEN THE FIRE HYDRANT AND ANY OTHER VERTICAL OBSTRUCTION

NOTE:
FIRE HYDRANTS SHALL BE PLACED APPROXIMATELY 300 FEET APART. LOCATION OF HYDRANTS MUST BE APPROVED BY VILLAGE ENGINEER OR PUBLIC WORKS DEPARTMENT.

REVISIONS

INITIAL	DATE
JPH	MARCH 2007

OSW-W-5

WATER MAIN LOWERING DETAIL

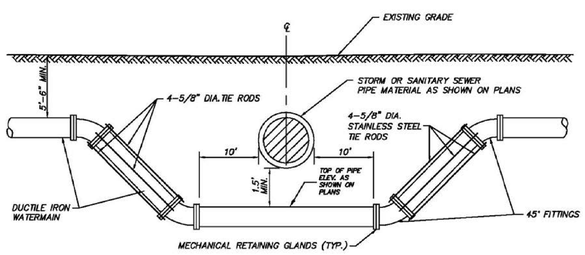

REVISIONS

INITIAL	DATE
JPH	MARCH 2007

NOTE ; VILLAGE APPROVED MECHANICAL RETAINING GLANDS CAN BE USED IN-LIEU OF STAINLESS STEEL TIE RODS. NO HYDRANTS OR VALVE VAULTS CAN BE LOCATED WITHIN DEPRESSED SECTION OF WATERMAIN.

OSW-W-6

STANDARD VALVE VAULT DETAIL

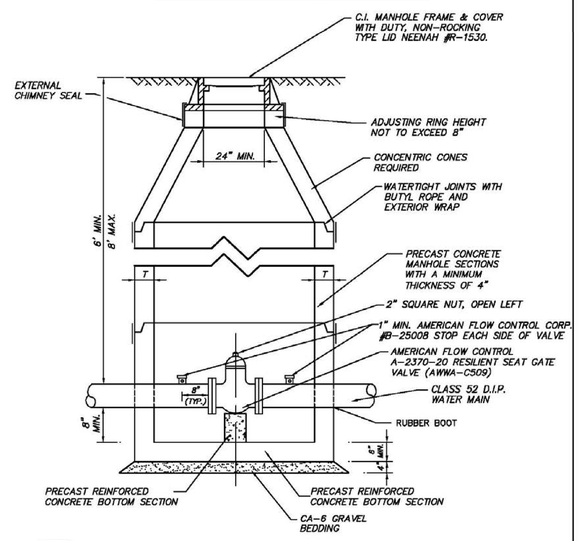

NOTES:

1. DRAIN FOR VALVE VAULT SHALL BE CONSTRUCTED ONLY WHEN SHOWN ON PLANS.
2. FOR PRESSURE CONNECTION SEE SEPARATE DETAIL.

DIAMETER OF WATER MAIN	D	T
8 INCHES AND UNDER	4'-0"	4"
10 INCHES AND OVER	5'-0"	5"

REVISIONS

INITIAL	DATE
JPH	MARCH 2007

OSW-W-8

ISSUE	REVISIONS	DATE
5.	ISSUED FOR BIDDING	2/21/19
4.	PER VILLAGE OF OSWEGO, IDOT, FOX METRO	2/15/19
3.	REVISIONS PER VILLAGE OF OSWEGO REVIEW	1/11/19
2.	REVISIONS PER VILLAGE OF OSWEGO REVIEW	12/4/18
1.	REVISIONS PER VILLAGE OF OSWEGO REVIEW	11/21/18

PROJECT STAFF
PROJECT MANAGER:
ENGINEER:
ENGINEER:
ENGINEER:
TECHNICIAN:
TECHNICIAN:

TROTTER ASSOCIATES, INC.
ENGINEERS AND SURVEYORS
4019 N. Naper Blvd., Suite D
Naperville, Illinois 60565
Ph: 630-587-0170 • Fax: 630-587-0175

The Reserve at Hudson Crossing - Roadway Improvements
Village of Oswego Standard Details
Oswego, Kendall County, Illinois

Project No.: SH0002
File Name:
Issue Date: 2/21/2019
Scale:
Sheet Number
88

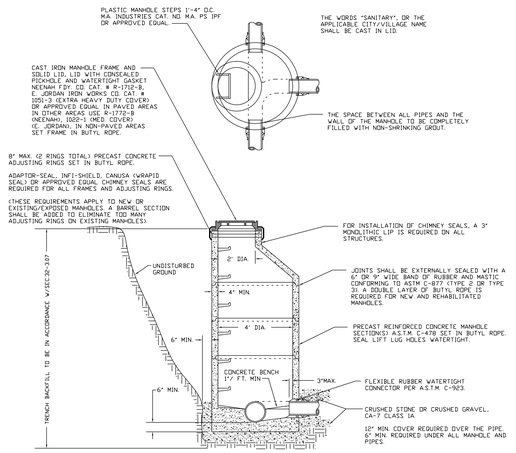

NOTE

INVERTS OF INCOMING PIPE(S) SHALL BE DETERMINED BY MATCHING ELEVATIONS OF THE TOPS OF THE NEW AND OUTGOING PIPES. HOWEVER, FOR SEWERS 18" OR LARGER, SEE APPROVED PLANS FOR INFORMATION ON INVERTS. ALL FLOW CHANNELS SHALL BE PRECAST INTO THE BENCH OR CORED.

TYPE " A " MANHOLE

Fox Metro Water Reclamation District

DESIGNED FMWRD		REVISION	2017
DRAWN KZ		E Chimney Seal Note	03/19/07
APPROVED KZ, MF		F Note Revisions	04/29/08
DATE 05-12-00		G "NOTE" Revision-Invert Elev's	05/10/12
SCALE NTS		H Misc. Note Revisions	03/09/17
SHEET 1	CAD DWG.		REVISION
OF 1	JOB NO.		H

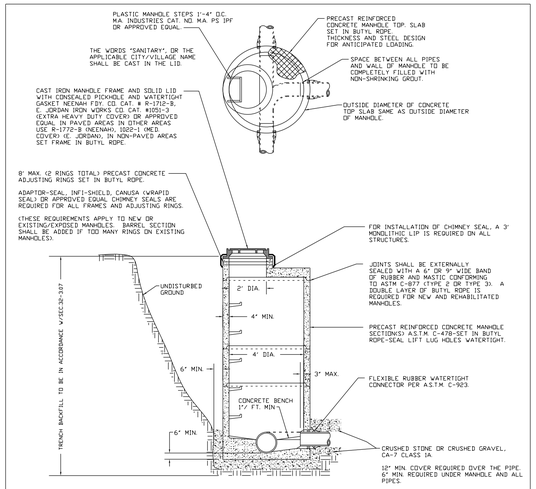

NOTE

INVERTS OF INCOMING PIPE(S) SHALL BE DETERMINED BY MATCHING ELEVATIONS OF THE TOPS OF THE NEW AND OUTGOING PIPES. HOWEVER, FOR SEWERS 18" OR LARGER, SEE APPROVED PLANS FOR INFORMATION ON INVERTS. ALL FLOW CHANNELS SHALL BE PRECAST INTO THE BENCH OR CORED.

TYPE " C " MANHOLE

Fox Metro Water Reclamation District

DESIGNED FMWRD		REVISION	2017
DRAWN KZ		D Note & Invert Revision	01/30/06
APPROVED KZ, MF		E Chimney Seal Note	03/19/07
DATE 05-15-00		F Note Revisions	04/29/08
SCALE NTS		G Misc. Note Revisions	03/09/17
SHEET 1	CAD DWG.		REVISION
OF 1	JOB NO.		G

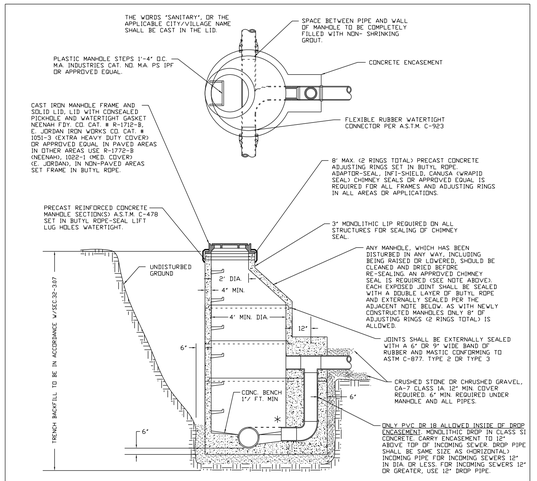

*** NOTE**

INVERTS OF ALL LOWER PIPES SHALL BE DETERMINED BY MATCHING ELEVATIONS OF THE TOP OF ALL PIPES. HOWEVER, FOR SEWERS 15" OR GREATER, SEE APPROVED PLANS FOR INFORMATION ON INVERTS. ALL FLOW CHANNELS SHALL BE PRECAST INTO THE BENCH.

DROP MANHOLE / NEW CONSTRUCTION

Fox Metro Water Reclamation District

DESIGNED FMWRD		REVISION	2017
DRAWN KWZ		D Note & Invert Revision	02/03/05
APPROVED KZ, MF		E Chimney Seal & Drop Notes	07/31/06
DATE 05-15-00		F Chimney Seal Notes	04/29/08
SCALE NTS		G Minor Note Mod's	12/14/16
SHEET 1	CAD DWG.		REVISION
OF 1	JOB NO.		G

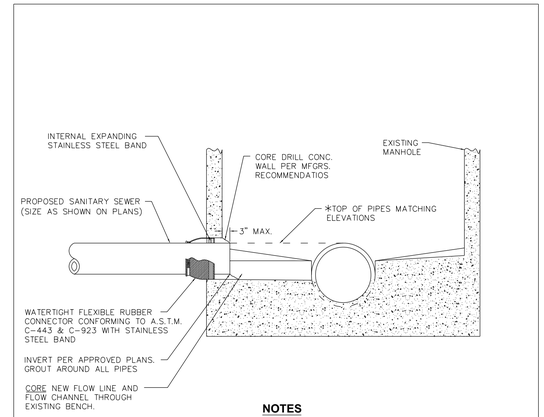

NOTES

* TO ESTABLISH NEW INVERT, MATCH THE ELEVATION OF THE TOP OF THE INCOMING PIPE TO THE TOP OF THE EXISTING DOWNSTREAM PIPE. FOR EXISTING SEWERS GREATER THAN OR EQUAL TO 18", SEE APPROVED PLANS.

SERVICES: NO DROP CONNECTIONS ALLOWED. CORE AT THE MANHOLE BOTTOM PER ABOVE WITH A SINGLE CONNECTION, THEN USE TWO 45 DEGREE FITTINGS TO ESTABLISH UPSTREAM LINE/GRADE.

PIPE TO EXISTING MANHOLE CONNECTION

Fox Metro Water Reclamation District

DESIGNED FMWRD		REVISION	2017
DRAWN KZ		D Flow Channel Rev.	02/02/05
APPROVED KZ, MF		E Grout Note	01/30/06
DATE 05-15-00		E Note Additions	04/29/08
SCALE NTS		G Notes' revision	02/9/17
SHEET 1	CAD DWG.		REVISION
OF 1	JOB NO.		G

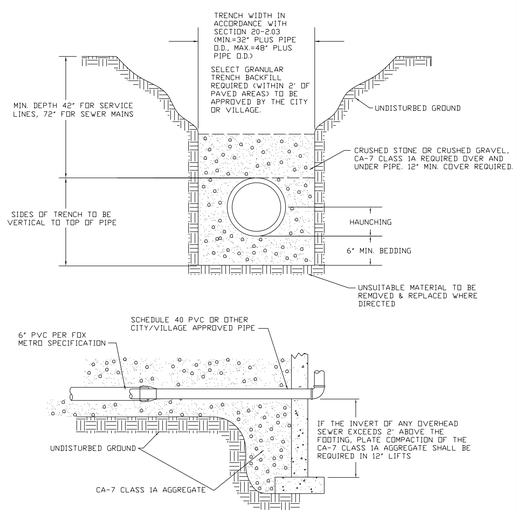

TRENCH DETAIL FOR SANITARY SERVICES & MAINS

Fox Metro Water Reclamation District

DESIGNED FMWRD		REVISION	2017
DRAWN KZ		C Revised 2004	01/05/04
APPROVED KZ, MF		D Stone Note	01/30/06
DATE 05-12-00		E 07 Revisions	03/19/07
SCALE NTS		F Overdig Compaction Note	03/08/17
SHEET 1	CAD DWG.		REVISION
OF 1	JOB NO.		F

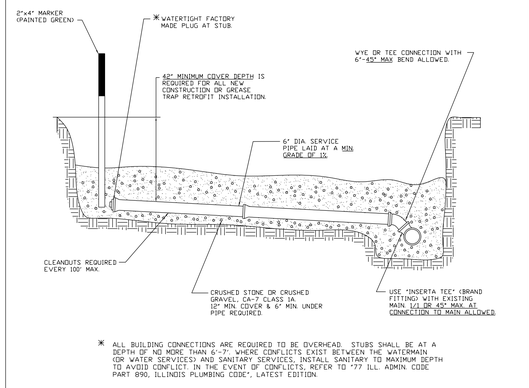

* ALL BUILDING CONNECTIONS ARE REQUIRED TO BE OVERHEAD. STUBS SHALL BE AT A DEPTH OF NO MORE THAN 6'-7' WHERE CONFLICTS EXIST BETWEEN THE WATERMAIN (OR WATER SERVICES) AND SANITARY SERVICES, INSTALL SANITARY TO MAXIMUM DEPTH TO AVOID CONFLICT. IN THE EVENT OF CONFLICTS, REFER TO "77 ILL. ADMIN. CODE PART 890, ILLINOIS PLUMBING CODE", LATEST EDITION.

NOTE

SELECT GRANULAR BACKFILL, REQUIRED UNDER PAVED AREAS, TO BE APPROVED BY APPROPRIATE CITY OR VILLAGE.

GREATER THAN 45 ° CONNECTION AT MAIN NOT ALLOWED

SERVICE CONNECTION

Fox Metro Water Reclamation District

DESIGNED FMWRD		REVISION	2017
DRAWN KZ		E Inset & Note Revisions	03/19/07
APPROVED KZ, MF		F Note Revisions	04/29/08
DATE 05-12-00		G Note Revisions	05/10/12
SCALE NTS		H Overhead & Misc. Note Revisions	02/24/17
SHEET 1	CAD DWG.		REVISION
OF 1	JOB NO.		H

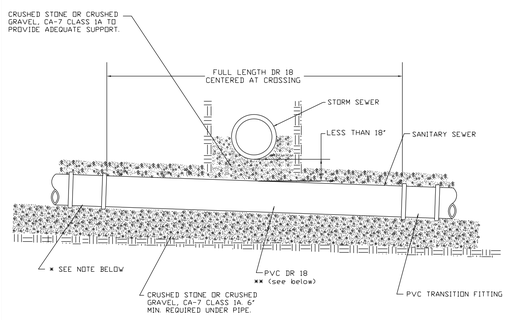

NOTE

* SHOW DR 18 THROUGHOUT CONFLICT AREA, TO ANY PROPOSED MANHOLE, IF SAID STRUCTURE IS WITHIN 30' OF CENTERLINE OF THE CROSSING.

** IN LIEU OF ABOVE STANDARD METHOD, DR 18 MAY BE INSTALLED MANHOLE TO MANHOLE.

SANITARY SEWER AT STORM SEWER CROSSING

Fox Metro Water Reclamation District

DESIGNED FMWRD		REVISION	2017
DRAWN KZ		E Note Revision	01/30/06
APPROVED KZ, MF		F Fitting & Note Revision	03/19/07
DATE 05-15-00		G Dimension Change	04/29/08
SCALE NTS		H Full Length DR 18 Note Rev.	02/09/17
SHEET 1	CAD DWG.		REVISION
OF 1	JOB NO.		H

ISSUE	REVISIONS	DATE
5.	ISSUED FOR BIDDING	2/21/19
4.	PER VILLAGE OF OSWEGO, IDOT, FOX METRO	2/15/19
3.	REVISIONS PER VILLAGE OF OSWEGO REVIEW	1/11/19
2.	REVISIONS PER VILLAGE OF OSWEGO REVIEW	12/4/18
1.	REVISIONS PER VILLAGE OF OSWEGO REVIEW	11/21/18

PROJECT STAFF
PROJECT MANAGER:
ENGINEER:
ENGINEER:
ENGINEER:
TECHNICIAN:
TECHNICIAN:

KROTTER ASSOCIATES, INC.
ENGINEERS AND SURVEYORS
409 W. Veterans Parkway
Yorkville, Illinois 60560
Ph: 630-387-0170 • Fax: 630-387-0175

The Reserve at Hudson Crossing - Roadway Improvements

Fox Metro Water Reclamation District Standard Details

Oswego, Kendall County, Illinois

Project No.: SH0002

File Name: 89_DTL_FOXMETRO.dgn

Issue Date: 2/21/2019

Scale: N.T.S.

Sheet Number

89

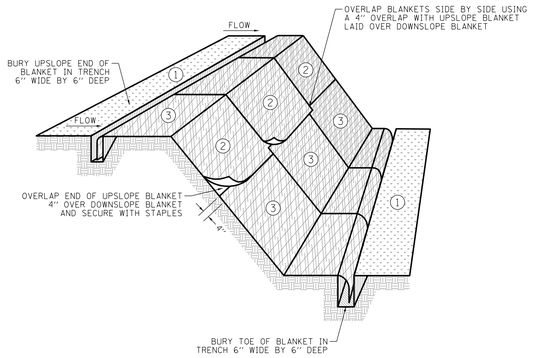

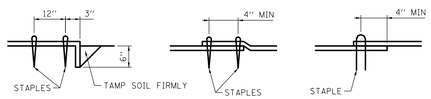

DETAIL 1 ANCHOR SLOT

DETAIL 2 SINGLE JOINT

DETAIL 3 PARALLEL OVERLAPS

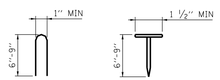

STAPLE DETAIL

PUSH PIN DETAIL

NOTES:

1. STAPLES SHALL BE PLACED IN A DIAMOND PATTERN AT 2 PER S.Y. FOR STITCHED BLANKETS. NON-STITCHED SHALL USE 4 STAPLES PER S.Y. OF MATERIAL. THIS EQUATES TO 200 STAPLES WITH STITCHED BLANKET AND 400 STAPELS WITH NON-STITCHED BLANKET PER 100 S.Y. OF MATERIAL.
2. STAPLE OR PUSH PIN LENGTHS SHALL BE SELECTED BASED ON SOIL TYPE AND CONDITIONS. (MINIMUM STAPLE LENGTH IS 6")
3. EROSION CONTROL MATERIAL SHALL BE PLACED IN CONTACT WITH THE SOIL OVER A PREPARED SEED BED.
4. ALL ANCHOR SLOTS SHALL BE STAPLED AT APPROXIMATELY 12" INTERVALS.

Erosion Control Blanket Installation

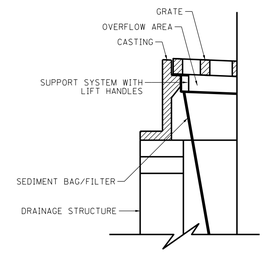

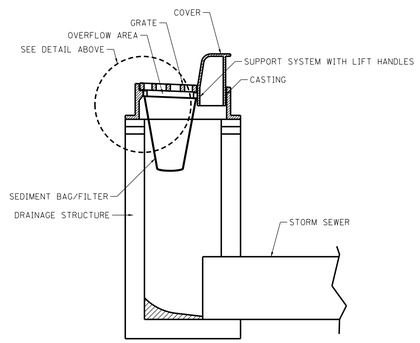

Inlet Protection

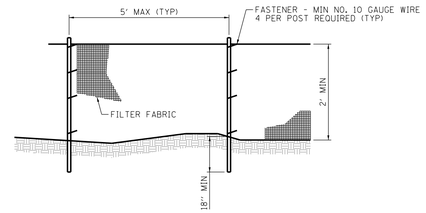

ELEVATION

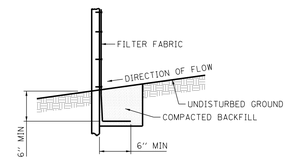

FABRIC ANCHOR DETAIL

NOTES:

1. TEMPORARY SEDIMENT FENCE SHALL BE INSTALLED PRIOR TO ANY GRADING WORK IN THE AREA TO BE PROTECTED. THEY SHALL BE MAINTAINED THROUGHOUT THE CONSTRUCTION PERIOD AND REMOVED IN CONJUNCTION WITH THE FINAL GRADING AND SITE STABILIZATION.
2. FILTER FABRIC SHALL MEET THE REQUIREMENTS OF MATERIAL SPECIFICATION 592 GEOTEXTILE TABLE 1 OR 2, CLASS I, II OR IV WITH EQUIVALENT OPENING SIZE OF AT LEAST 30 FOR NONWOVEN AND 40 FOR WOVEN.
3. FENCE POSTS SHALL BE EITHER STANDARD STEEL POST OR WOOD POST WITH A MINIMUM CROSS-SECTIONAL AREA OF 3.0 SQ. IN.

Silt Fence

STABILIZATION TYPE	JAN	FEB	MAR	APR	MAY	JUN	JUL	AUG	SEP	OCT	NOV	DEC
TEMPORARY SEEDING												
MULCHING												
PERMANENT SEEDING												
DORMANT SEEDING												

EACH PRACTICE SHALL BE APPLIED AT A MINIMUM RATE OF 90 LB/ACRE

SEEDING AND MULCHING APPLICATION RATES AND APPLICATION TIMES OF YEAR, AS WELL AS SEEDING SPECIES SHALL BE IN ACCORDANCE WITH THE ILLINOIS URBAN MANUAL, CURRENT EDITION

THE CONDITION OF THE CONSTRUCTION SITE FOR WINTER SHUTDOWN SHALL BE ADDRESSED IN THE FALL GROWING SEASON SO THAT SLOPES AND OTHER BARE EARTH AREAS MAY BE STABILIZED WITH TEMPORARY AND OR PERMANENT VEGETATIVE COVER FOR PROPER EROSION AND SEDIMENT CONTROL. ALL OPEN AREAS THAT ARE TO REMAIN IDLE THROUGHOUT THE WINTER SHALL RECEIVE TEMPORARY EROSION CONTROL MEASURES INCLUDING TEMPORARY SEEDING, MULCHING AND/OR EROSION CONTROL BLANKET PRIOR TO THE END OF THE FALL GROWING SEASON. THE AREAS TO BE WORKED BEYOND THE END OF THE GROWING SEASON MUST INCORPORATE SOIL STABILIZATION MEASURES THAT DO NOT RELY ON VEGETATIVE COVER SUCH AS EROSION CONTROL BLANKET AND HEAVY MULCHING

Seeding and Mulching Schedule

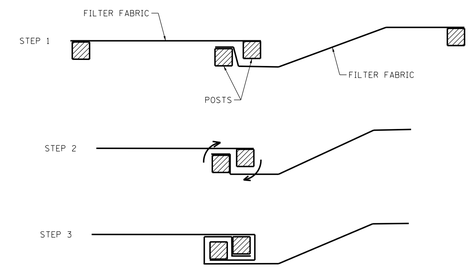

ATTACHING TWO SILT FENCES

NOTES:

1. PLACE THE END POST OF THE SECOND FENCE INSIDE THE END POST OF THE FIRST FENCE.
2. ROTATE BOTH POSTS AT LEAST 180 DEGREES IN A CLOCKWISE DIRECTION TO CREATE A TIGHT SEAL WITH THE FABRIC MATERIAL.
3. CUT THE FABRIC NEAR THE BOTTOM OF THE STAKES TO ACCOMMODATE THE 6" FLAP.
4. DRIVE BOTH POSTS A MINIMUM OF 18 INCHES INTO THE GROUND AND BURY THE FLAP.
5. COMPACT BACKFILL (PARTICULARLY AT SPLICES) COMPLETELY TO PREVENT STORMWATER PIPING.

Silt Fence Splicing

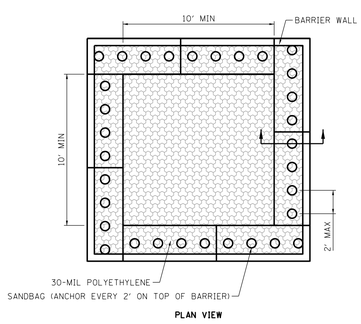

PLAN VIEW

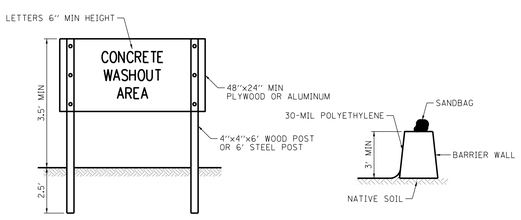

SIGN DETAIL

BARRIER WALL ANCHOR SECTION

NOTES:

1. MAINTAINING TEMPORARY CONCRETE WASHOUT FACILITIES SHALL INCLUDE REMOVING AND DISPOSING OF HARDENED CONCRETE AND/OR SLURRY AND RETURNING THE FACILITIES TO A FUNCTIONAL CONDITION.
2. FACILITY SHALL BE CLEANED OR RECONSTRUCTED IN A NEW AREA ONCE WASHOUT BECOMES TWO-THIRDS FULL.

Temporary Concrete Washout Facility - Barrier Wall

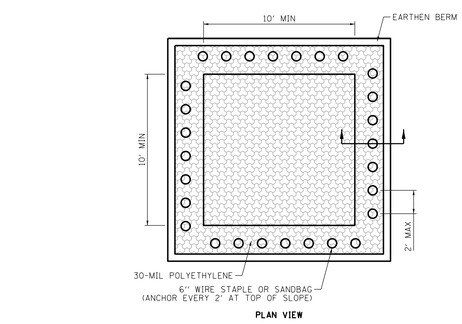

PLAN VIEW

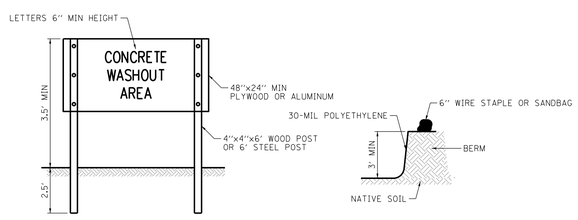

SIGN DETAIL

EARTHEN BERM ANCHOR SECTIONS

NOTES:

1. MAINTAINING TEMPORARY CONCRETE WASHOUT FACILITIES SHALL INCLUDE REMOVING AND DISPOSING OF HARDENED CONCRETE AND/OR SLURRY AND RETURNING THE FACILITIES TO A FUNCTIONAL CONDITION.
2. FACILITY SHALL BE CLEANED OR RECONSTRUCTED IN A NEW AREA ONCE WASHOUT BECOMES TWO-THIRDS FULL.

Temporary Concrete Washout Facility - Earthen Type

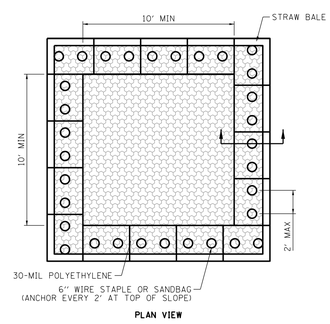

PLAN VIEW

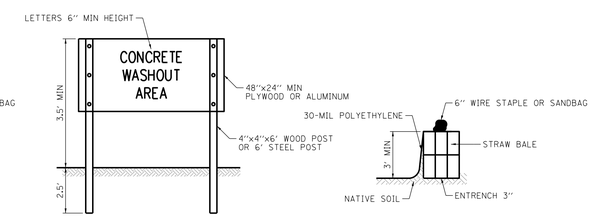

SIGN DETAIL

STRAW BALE ANCHOR SECTIONS

NOTES:

1. MAINTAINING TEMPORARY CONCRETE WASHOUT FACILITIES SHALL INCLUDE REMOVING AND DISPOSING OF HARDENED CONCRETE AND/OR SLURRY AND RETURNING THE FACILITIES TO A FUNCTIONAL CONDITION.
2. FACILITY SHALL BE CLEANED OR RECONSTRUCTED IN A NEW AREA ONCE WASHOUT BECOMES TWO-THIRDS FULL.

Temporary Concrete Washout Facility - Straw Bale

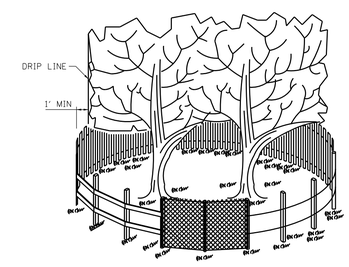

SIDE VIEW

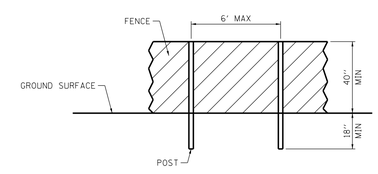

POST AND FENCE DETAIL

NOTES:

1. THE FENCE SHALL BE LOCATED A MINIMUM OF 1 FOOT OUTSIDE THE DRIP LINE OF THE TREE TO BE SAVED AND IN NO CASE CLOSER THAN 5 FEET TO THE TRUNK OF ANY TREE.
2. FENCE POSTS SHALL BE EITHER STANDARD STEEL POSTS OR WOOD POSTS WITH A MINIMUM CROSS SECTIONAL AREA OF 3.0 SQ. IN.
3. THE FENCE MAY BE EITHER 40" HIGH SNOW FENCE, 40" PLASTIC WEB FENCING OR ANY OTHER MATERIAL AS APPROVED BY THE ENGINEER/INSPECTOR.

Tree Protection Fencing

ISSUE	REVISIONS	DATE
5.	ISSUED FOR BIDDING	2/21/19
4.	PER VILLAGE OF OSWEGO, IDOT, FOX METRO	2/15/19
3.	REVISIONS PER VILLAGE OF OSWEGO REVIEW	1/11/19
2.	REVISIONS PER VILLAGE OF OSWEGO REVIEW	12/4/18
1.	REVISIONS PER VILLAGE OF OSWEGO REVIEW	11/21/18

PROJECT STAFF
PROJECT MANAGER:
ENGINEER:
ENGINEER:
ENGINEER:
TECHNICIAN:
TECHNICIAN:

TROTTER ASSOCIATES, INC.
ENGINEERS AND SURVEYORS
409 W. Veterans Parkway, Suite D
Yorkville, Illinois 60560
Ph. 630-387-0170 • Fax: 630-387-0175

The Reserve at Hudson Crossing - Roadway Improvements

Erosion Control Details

Oswego, Kendall County, Illinois

Project No.:	SH0002
File Name:	90_DTL_EROS.dgn
Issue Date:	2/21/2019
Scale:	N.T.S.
Sheet Number	90

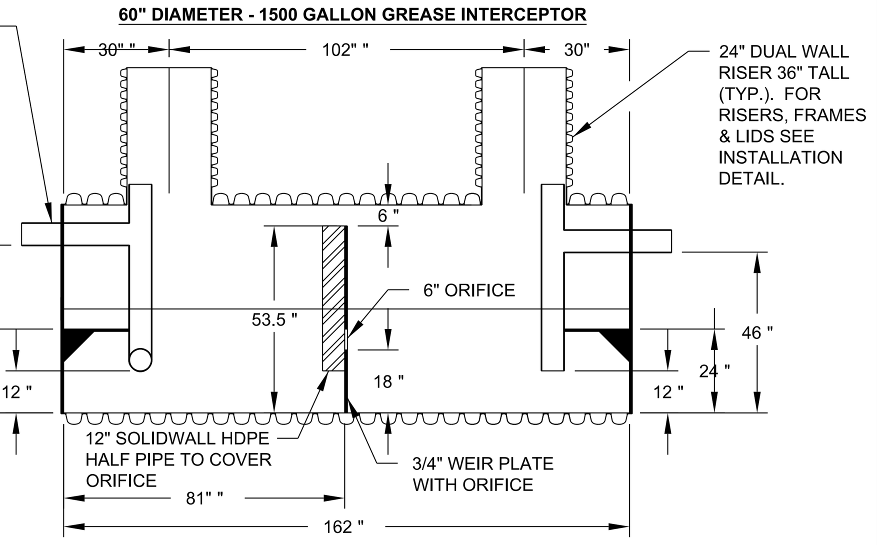

NOTES:

1. FOR GRAVITY FLOW APPLICATIONS ONLY.
2. ALL ADS GREASE INTERCEPTOR UNITS ARE TO BE INSTALLED PER THE MANUFACTURERS' INSTALLATION INSTRUCTIONS
3. MANUFACTURER'S INSTALLATION INSTRUCTIONS PROVIDE AN H-25 TRAFFIC RATING. CONTACT MANUFACTURE'S REPRESENTATIVE FOR OTHER LOADING CONDITIONS.
4. INLETS AND OUTLETS SHALL BE EITHER 4" OR 6". REFER TO THE APPROVED PLANS FOR THE SIZING OF THE DOWNSTREAM SEWER SERVICE (4" OR 6"). CONTACT MANUFACTURERS' REPRESENTATIVE FOR CUSTOM APPLICATIONS.
5. PER FOX METRO REQUIREMENTS A MINIMUM OF 3.5' OF COVER AND A MINIMUM OF 1.00% SLOPE IS REQUIRED FOR ALL EXTERIOR SANITARY PIPING
6. ADDITIONAL PIPE CAN BE ORDERED TO EXTEND RISERS, WHICH CAN BE FIELD CUT TO FINAL GRADE IN FIELD.
7. INLINE DRAINS SHOWN ON INSTALLATION INSTRUCTIONS WILL PROVIDE H-25 TRAFFIC RATING WHEN INSTALLED WITH AN H-25 TRAFFIC RATED LOAD BEARING CONCRETE COLLAR. SEE INSTALLATION INSTRUCTIONS.
8. CUSTOM SIZES AVAILABLE. CONTACT LOCAL ADS REPRESENTATIVE.
9. PROUDLY MADE IN MENDOTA, ILLINOIS.
10. CONTACT CUSTOMER SERVICE AT 1-800-733-4110 FOR PRICING AND DELIVERY INFORMATION.
11. NO VENTS ARE REQUIRED TO BE INSTALLED IN FOX METRO'S SERVICE AREA.

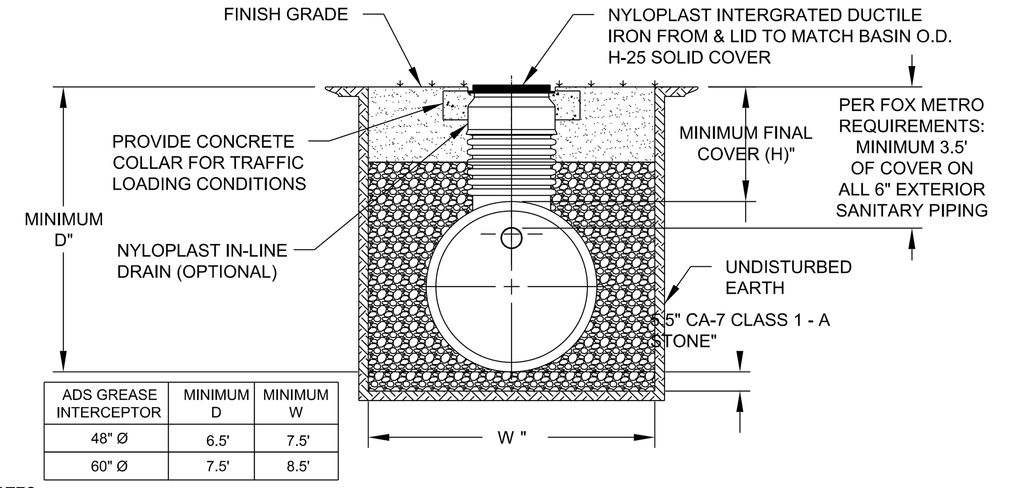

ADS GREASE INTERCEPTOR	MINIMUM D	MINIMUM W
48" Ø	6.5'	7.5'
60" Ø	7.5'	8.5'

NOTES:

1. PLEASE FOLLOW THE INSTALLATION GUIDELINES AS FOUND IN THE INSTALLATION SECTION OF THE ADS DRAINAGE HANDBOOK, AND ASTM D 2321.
2. AVOID EXCESSIVE GROUND WATER IN THE TRENCH, DE-WATER AS NECESSARY. APPROPRIATE MEASURES SHALL BE TAKEN TO PREVENT MIGRATION OF FINES, SEE ASTM D2321.
3. PROVIDE SHEETING OR SHORING AS REQUIRED.
4. UTILIZE CARE WHEN LOWERING UNIT INTO THE TRENCH. HANDLE USING NYLON SLINGS AND TWO PICK POINTS. DO NOT USE SLING AROUND RISERS.
5. PLACE CA-7 CLASS I -A STONE BACKFILL AROUND THE UNIT IN UNIFORM 8"-12" LIFTS, AND COMPACTED TO 90% SPD. CONTINUE BACKFILL WITH AASHTO NO. 57 OR NO. 8 STONE TO 12" ABOVE GREASE INTERCEPTOR.
6. FILL UNIT WITH WATER TO THE INVERT OF THE OUTLET PIPE ONCE BACKFILL IS PLACED AND COMPACTED 12" ABOVE THE UNIT.
7. FOR NON-TRAFFIC LOADING: H = 12" COVER FOR ALL UNITS MEASURED FROM THE TOP OF THE PIPE TO GROUND SURFACE. FOR TRAFFIC LOADING CONDITIONS: H = 24" COVER FOR ALL UNITS MEASURED FROM THE TOP OF THE PIPE TO THE BOTTOM OF BITUMINOUS PAVEMENT OR TOP OF RIGID PAVEMENT. FOR TRAFFIC LOADING ALL INSPECTION RISERS SHALL HAVE A TRAFFIC RATED FRAME AND LID WITH A TRAFFIC RATED LOAD BEARING CONCRETE COLLAR. MAXIMUM COVER HEIGHT MEASURED FROM THE TOP OF THE UNIT TO FINAL GRADE SHALL NOT EXCEED 8 FEET.
8. ALL RISER EXTENSIONS TO GRADE SHOULD BE COORIDNATED THROUGH YOUR LOCAL ADS REPRESENTATIVE.

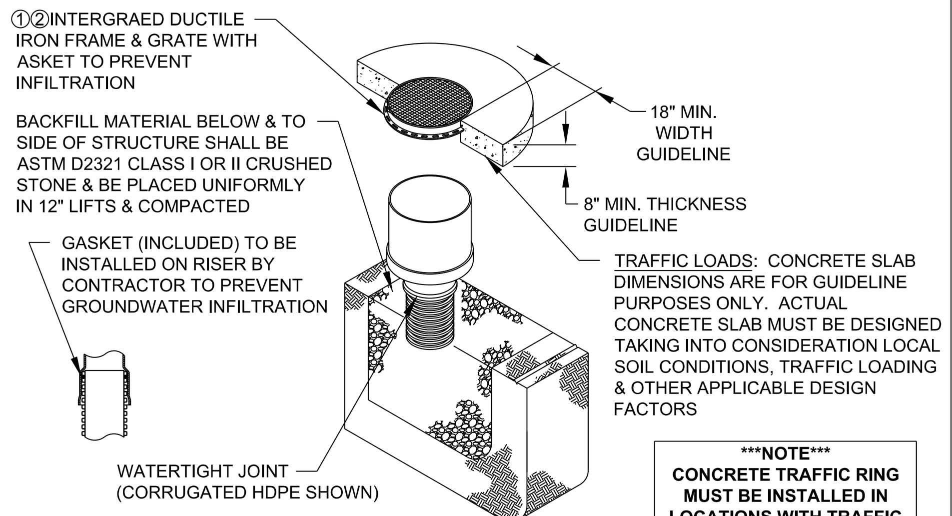

NOTE
CONCRETE TRAFFIC RING MUST BE INSTALLED IN LOCATIONS WITH TRAFFIC LOADING

NOTES:

1. GRATES/SOLID COVERS SHALL BE DUCTILE IRON PER ASTM A536 GRADE 70-50-05.
2. FRAMES SHALL BE DUCTILE IRON PER ASTM A536 GRADE 70-50-05
3. DRAINAGE CONNECTION STUB JOINT TIGHTNESS SHALL CONFORM TO ASTM D3212 FOR CORRUGATED HDPE (ADS & HANCOR DUAL WALL) & SDR 35 PVC.
4. FOR COMPLETE DESIGN AND PRODUCT INFORMATION: WWW.NYLOPLAST-US.COM.
5. TO ORDER CALL: 800-821-6710

© 2007 ADS, INC.

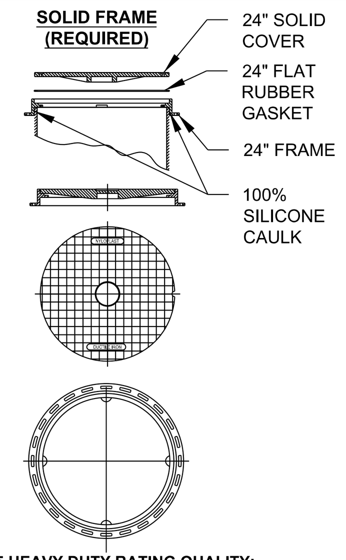

COVER HAS H-25 HEAVY DUTY RATING QUALITY:
MATERIALS SHALL CONFORM TO ASTM 536 GRADE 70-50-05.
PAINT: CASTINGS ARE FURNISHED WITH A BLACK PAINT
LOCKING DEVICE AVAILABLE UPON REQUEST
SEE DRAWING NO. 7001-110-025

RISER EXTENSION
TYPICALY REQUIRED WHEN DISTANCE FROM FINISHEDGRADE TO INVERT OF SEWER LATERAL IS GREATER THAN 4 FEET

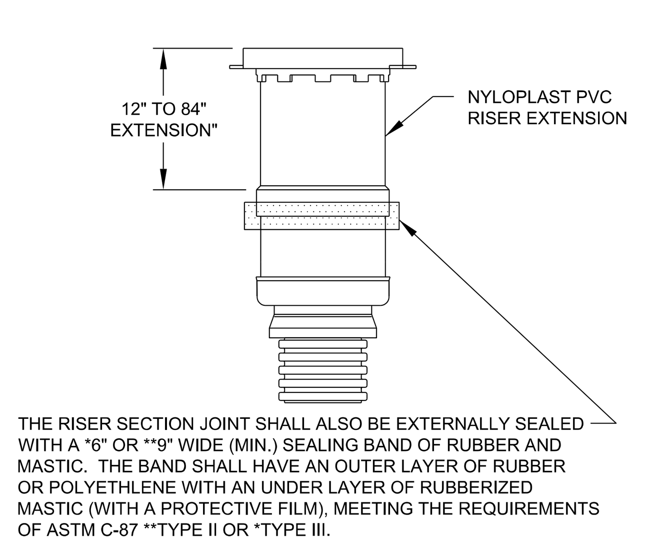

THE RISER SECTION JOINT SHALL ALSO BE EXTERNALLY SEALED WITH A *6" OR **9" WIDE (MIN.) SEALING BAND OF RUBBER AND MASTIC. THE BAND SHALL HAVE AN OUTER LAYER OF RUBBER OR POLYETHLENE WITH AN UNDER LAYER OF RUBBERIZED MASTIC (WITH A PROTECTIVE FILM), MEETING THE REQUIREMENTS OF ASTM C-87 **TYPE II OR *TYPE III.

REV.	DESCRIPTION	BY	MM/DD/YY	CHK'D
7	REVISED GENERAL NOTES	TJR	8/25/14	

ADVANCED DRAINAGE SYSTEMS, INC. ("ADS") HAS PREPARED THIS DETAIL BASED ON INFORMATION PROVIDED TO ADS. THIS DRAWING IS INTENDED TO DEPICT THE COMPONENTS AS REQUESTED. ADS HAS NOT PERFORMED ANY ENGINEERING OR DESIGN SERVICES FOR THIS PROJECT, NOR HAS ADS INDEPENDENTLY VERIFIED THE INFORMATION SUPPLIED. THE INSTALLATION DETAILS PROVIDED HEREIN ARE GENERAL RECOMMENDATIONS AND ARE NOT SPECIFIC FOR THIS PROJECT. THE DESIGN ENGINEER SHALL REVIEW THESE DETAILS PRIOR TO CONSTRUCTION. IT IS THE DESIGN ENGINEERS RESPONSIBILITY TO ENSURE THE DETAILS PROVIDED HEREIN MEETS OR EXCEEDS THE APPLICABLE NATIONAL, STATE, OR LOCAL REQUIREMENTS AND TO ENSURE THAT THE DETAILS PROVIDED HEREIN ARE ACCEPTABLE FOR THIS PROJECT.

1500 GAL GREASE INTERCEPTOR
FOX METRO, IL

DRAWING NUMBER:

ADVANCED DRAINAGE SYSTEMS, INC.
4640 TRUEMAN BLVD
HILLIARD, OHIO 43026

DRAWN BY: CKS
DATE: 08/13/08
CK'D BY:
SCALE: NTS
SHEET 1 OF 1

NDS
WE PUT WATER IN ITS PLACE

TECHNICAL SPECIFICATIONS

2 FT. METAL PERFORATED DURA SLOPE GRATE

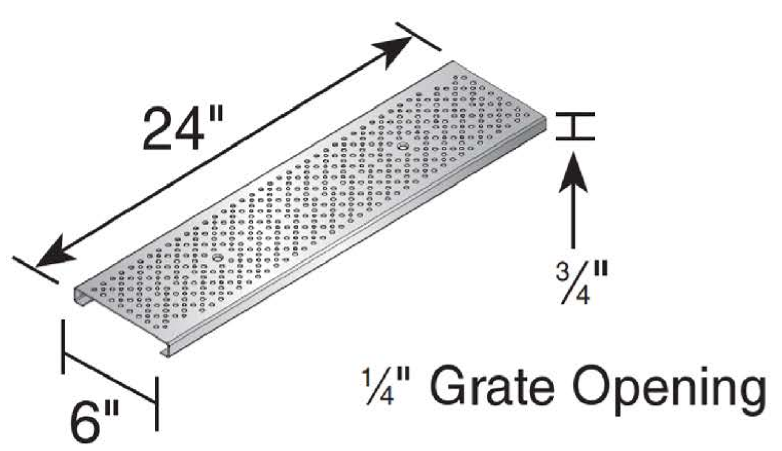

Material: Stainless Steel (DS-226), Galvanized Steel (DS-228)
Weight: DS-226—3.16 lbs each
DS-228—3.83 lbs each
Fits: Use with Dura Slope Channel Drains and Dura Slope Catch Basin (DS-340)
Grate Opening: 7.63 in^2 per foot
Will accommodate 23.34 gallons per minute per foot with 1/2" of head.

Load Recommendation Guide

Class A
- Loads of 1-60 psi.
- Recommended for pedestrians, bicycles and wheel chair traffic.

Note: Some installations may require a concrete collar to meet load rating. Loads are based on encasing product in concrete. Product must be installed using NDS instructions.

ADA Compliance

NDS provides a wide selection of grates that are compliant with the Americans with Disabilities Act. The ADA Accessibility Guidelines For Buildings and Facilities Section 4.5.4 specifies that ground and floor grates "shall have spaces no greater than 1/2 in (13 mm) wide in one direction."

We are pleased to provide grates that comply with these requirements, so that no individual need be limited from accessing the area safely and confidently.

To see if a grate is ADA compliant, please check the description of the product in our NDS Drainage Catalog: products that meet these requirements are marked "ADA compliant."

Like to find out more about ADA compliance and NDS? Send us your question and we'd be happy to help.

ADA Compliant/Heel-proof

851 N. Harvard Avenue
Lindsay, CA 93247
800-726-1994

Visit ndspro.com for specs, detail drawings, and case studies

NDS
WE PUT WATER IN ITS PLACE

NDS
WE PUT WATER IN ITS PLACE

NDS, INC.
851 NORTH HARVARD AVE.
LINDSAY, CA 93247
TOLL FREE: 1-800-726-1994
PHONE: (559) 562-9888
FAX: (559) 562-4488
www.ndspro.com

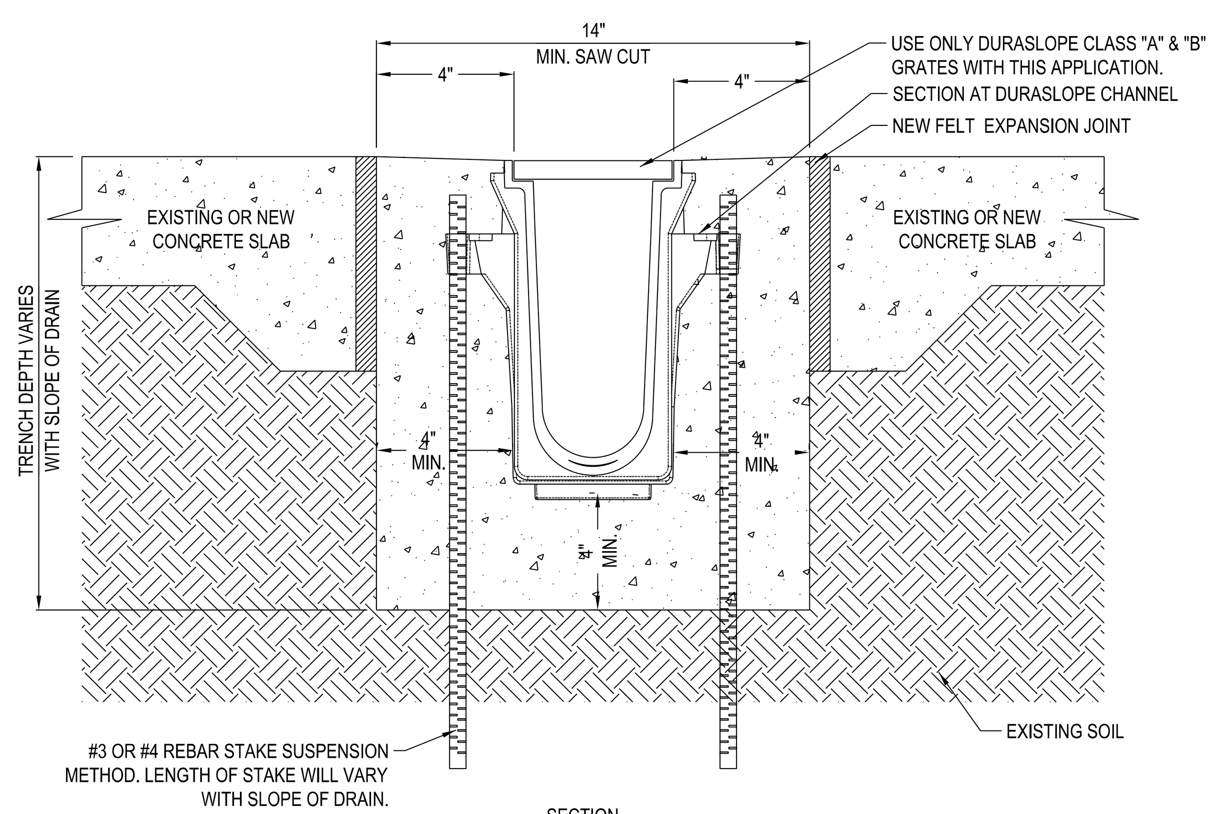

NOTES:

1. CHANNELS TO BE INSTALLED WITH BLANK GRATE. GRATE TO BE PROTECTED FROM CONCRETE POUR (COVER HOLES WITH TAPE).
2. INSTALLATION TO BE COMPLETED IN ACCORDANCE WITH MANUFACTURER'S SPECIFICATIONS.
3. DO NOT SCALE DRAWING.
4. THIS DRAWING IS INTENDED FOR USE BY ARCHITECTS, ENGINEERS, CONTRACTORS, CONSULTANTS AND DESIGN PROFESSIONALS FOR PLANNING PURPOSES ONLY.
5. ALL INFORMATION CONTAINED HEREIN WAS CURRENT AT THE TIME OF DEVELOPMENT BUT MUST BE REVIEWED AND APPROVED BY THE PRODUCT MANUFACTURER TO BE CONSIDERED ACCURATE.

DURA SLOPE TRENCH DRAIN SYSTEM
DURA SLOPE INSTALLATION DETAIL - CLASS 'A' & 'B' 4" ENCASMENT, REBAR SUSPENSION METHOD

REVISION DATE 3-5-2015

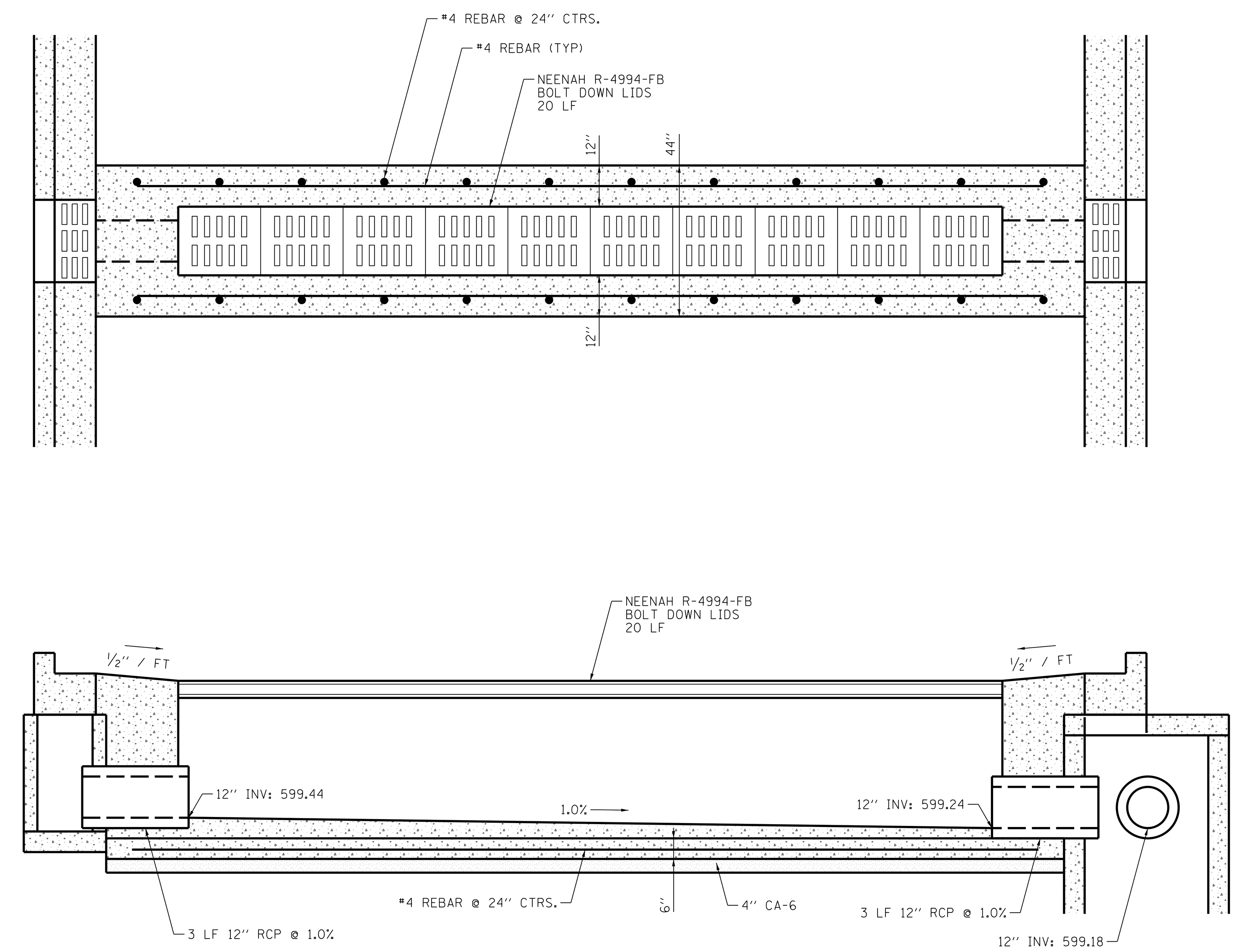

Trench Drain - Pavement (Jackson Street)

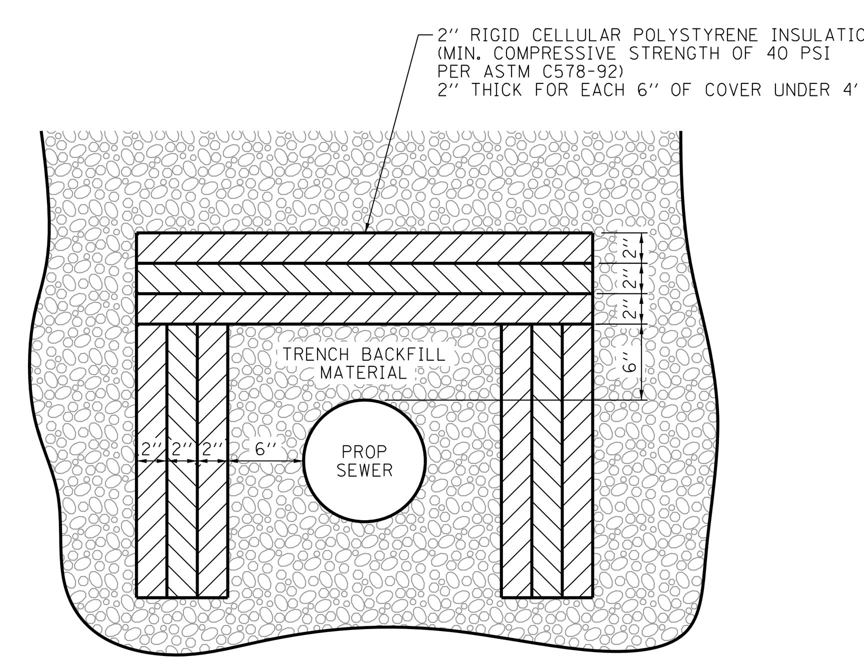

NOTE:
THIS METHOD MAY ONLY BE USED WHEN A MINIMUM OF 4' DEPTH TO THE TOP OF PIPE CANNOT BE ACHIEVED AND ONLY WITH THE WRITTEN APPROVAL OF THE VILLAGE ENGINEER.

Pipe Insulation

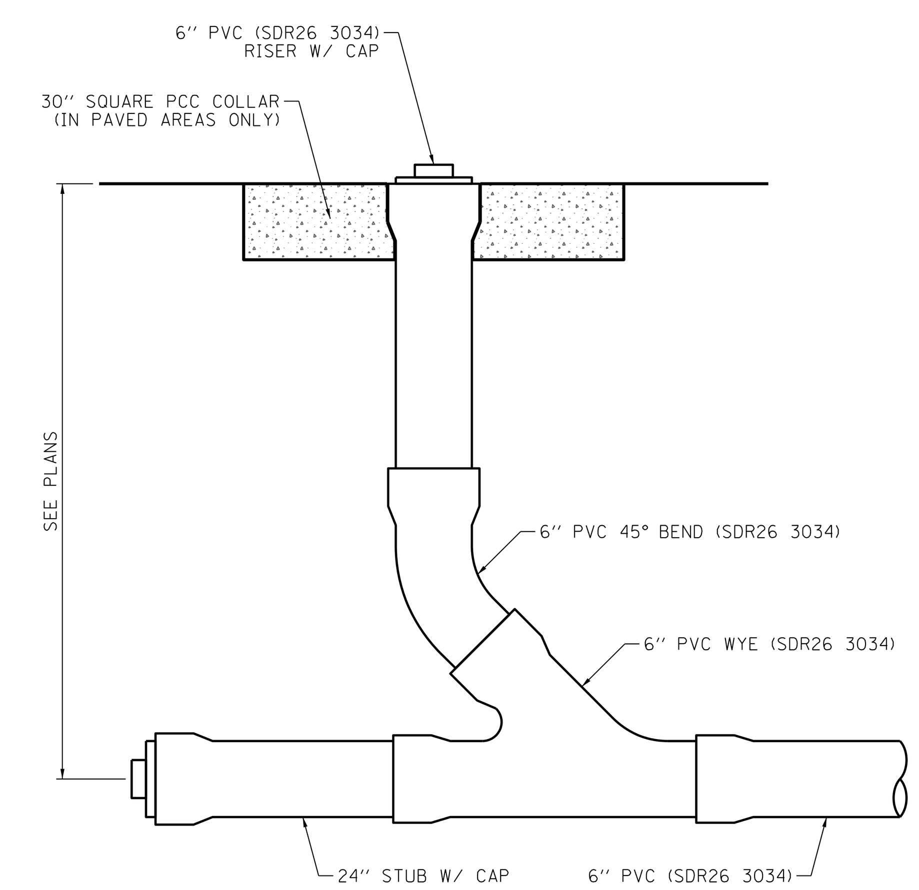

Sanitary Cleanout

ISSUE	REVISIONS	DATE
5.	ISSUED FOR BIDDING	2/21/19
4.	PER VILLAGE OF OSWEGO, IDOT, FOX METRO	2/15/19
3.	REVISIONS PER VILLAGE OF OSWEGO REVIEW	1/11/19
2.	REVISIONS PER VILLAGE OF OSWEGO REVIEW	12/4/18
1.	REVISIONS PER VILLAGE OF OSWEGO REVIEW	11/21/18

PROJECT STAFF
PROJECT MANAGER:
ENGINEER:
ENGINEER:
ENGINEER:
TECHNICIAN:
TECHNICIAN:

TROTTER and ASSOCIATES, INC.
ENGINEERS AND SURVEYORS
40W201 Wasco Road, Suite D
St. Charles, Il. 60175
Ph.: 630-587-0470 • Fax: 630-587-0475

The Reserve at Hudson Crossing - Roadway Improvements
Miscellaneous Details
Oswego, Kendall County, Illinois

Project No.: SH0002
File Name: 91_DTL_MISC.dgn
Issue Date: 2/21/2019
Scale: N.T.S.
Sheet Number
91

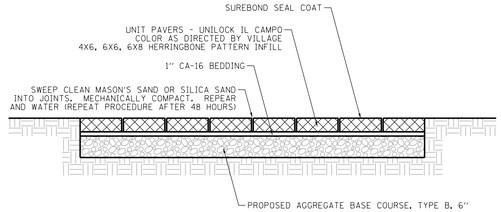

Paver Sidewalk

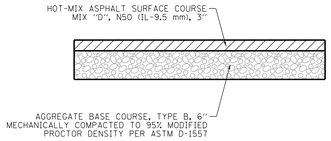

HMA Bike Path

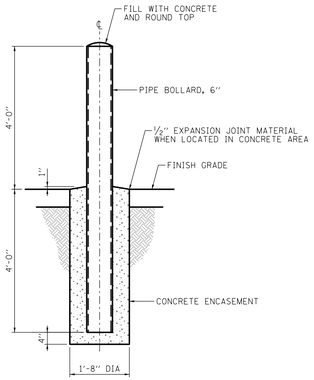

Bollard

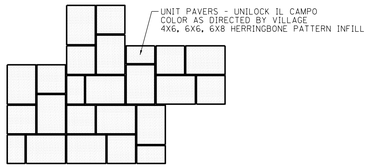

Paver Pattern

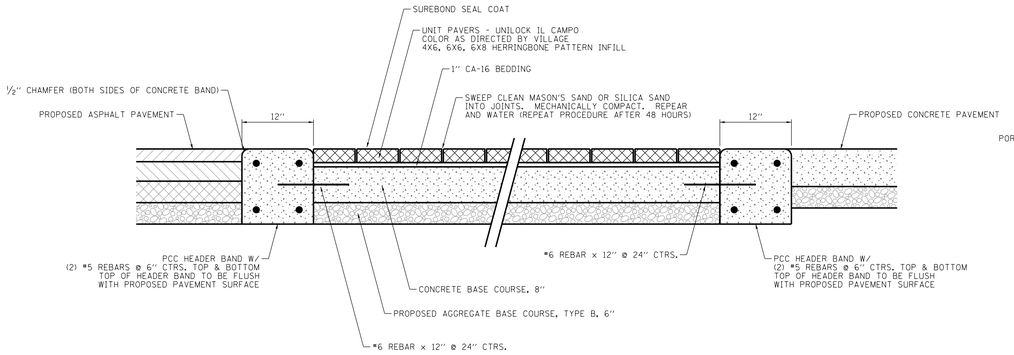

Paver Brick Pavement

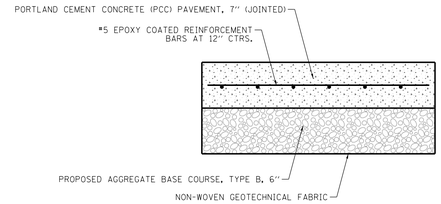

Concrete Pavement

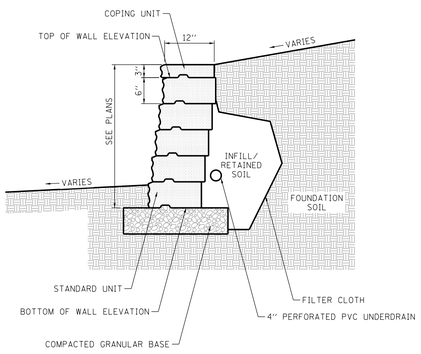

Segemental Concrete Block Retaining Wall

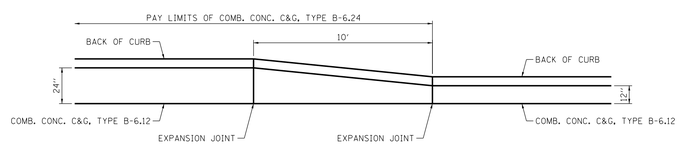

B-6.24 Curb Transition to B-6.12

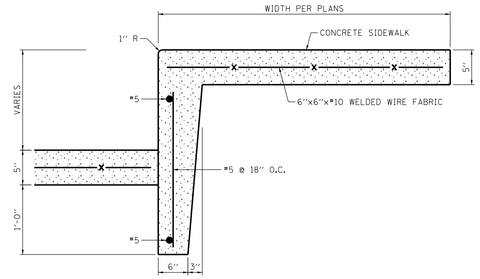

Intergal Barrier Wall and Sidewalk

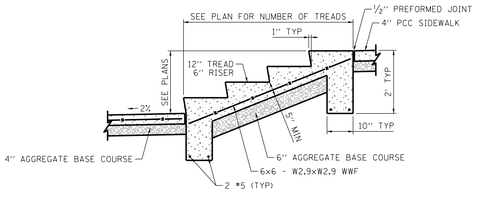

NOTES:

1. PLACE STEPS AND LANDING AGAINST FIRM, UNDISTURBED MATERIAL OR APPROVED FILL.
2. WIDTH OF STAIR AND LANDING TO BE 4'-0", WITH A CROSS SLOPE OF ¼" PER FOOT.

Concrete Stairs

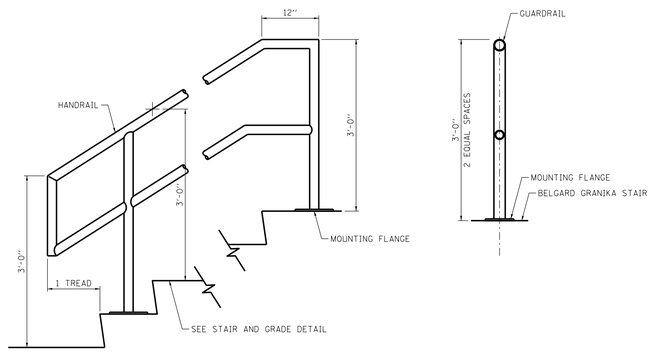

NOTES:

1. RAILING MATERIAL IS TO BE 1 1/2 INCHES ALUMINUM WELDED WITH POWDER COAT FINISHING TO BE DETERMINED BY OWNER.
2. MOUNTING FLANGE TO BE BOLTED INTO BELGARD GRANIKA STAIR WITH 4 A-36 4 INCH STEEL BOLTS.
3. MOUNTING FLANGE TO BE EPOXIED ONTO STAIR.
4. CONTRACTOR TO NOTIFY ENGINEER OF ANY CHANGES.

Handrail

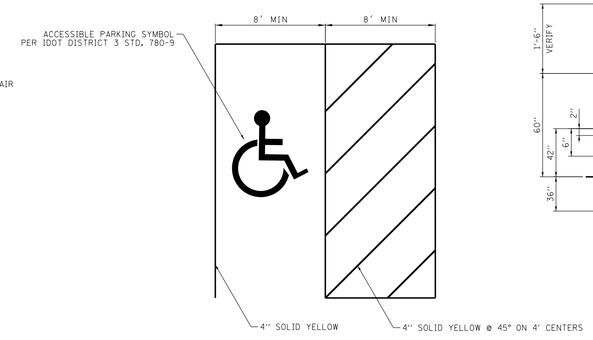

Accessible Parking Stall

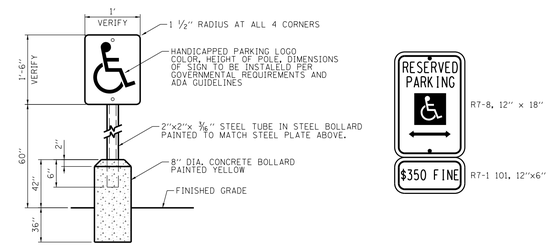

NOTES:

1. SIGNS SHOULD BE PROPERLY CENTERED AT FRONT OF PARKING SPACE.
2. SIGN FACE SHOULD BE LOCATED NO FURTHER THAN 6 FEET FROM THE FRONT OF EACH PARKING SPACE WITH A MINIMUM 3' - 0" CLEAR.
3. MOUNT SIGN ON COLUMN OR WALL AT SIM. CONDITION.
4. WHERE SIGN IS PLACED IN PAVED AREA AT PARKING STALLS PROVIDE PRECAST BUMPERS.

Accessible Parking Sign

ISSUE	REVISIONS	DATE
5.	ISSUED FOR BIDDING	2/21/19
4.	PER VILLAGE OF OSWEGO, IDOT, FOX METRO	2/15/19
3.	REVISIONS PER VILLAGE OF OSWEGO REVIEW	1/11/19
2.	REVISIONS PER VILLAGE OF OSWEGO REVIEW	12/4/18
1.	REVISIONS PER VILLAGE OF OSWEGO REVIEW	11/21/18

PROJECT STAFF
PROJECT MANAGER:
ENGINEER:
ENGINEER:
ENGINEER:
TECHNICIAN:
TECHNICIAN:

TROTTER ASSOCIATES, INC.
ENGINEERS AND SURVEYORS
400 W. Veterans Parkway, Suite D
Yorkville, Illinois 60560
Ph. 630-387-0170 • Fax 630-387-0175

The Reserve at Hudson Crossing - Roadway Improvements

Miscellaneous Details

Oswego, Kendall County, Illinois

Project No.: SH0002
File Name: 92_DTL_MISC.dgn
Issue Date: 2/21/2019
Scale: N.T.S.
Sheet Number
92

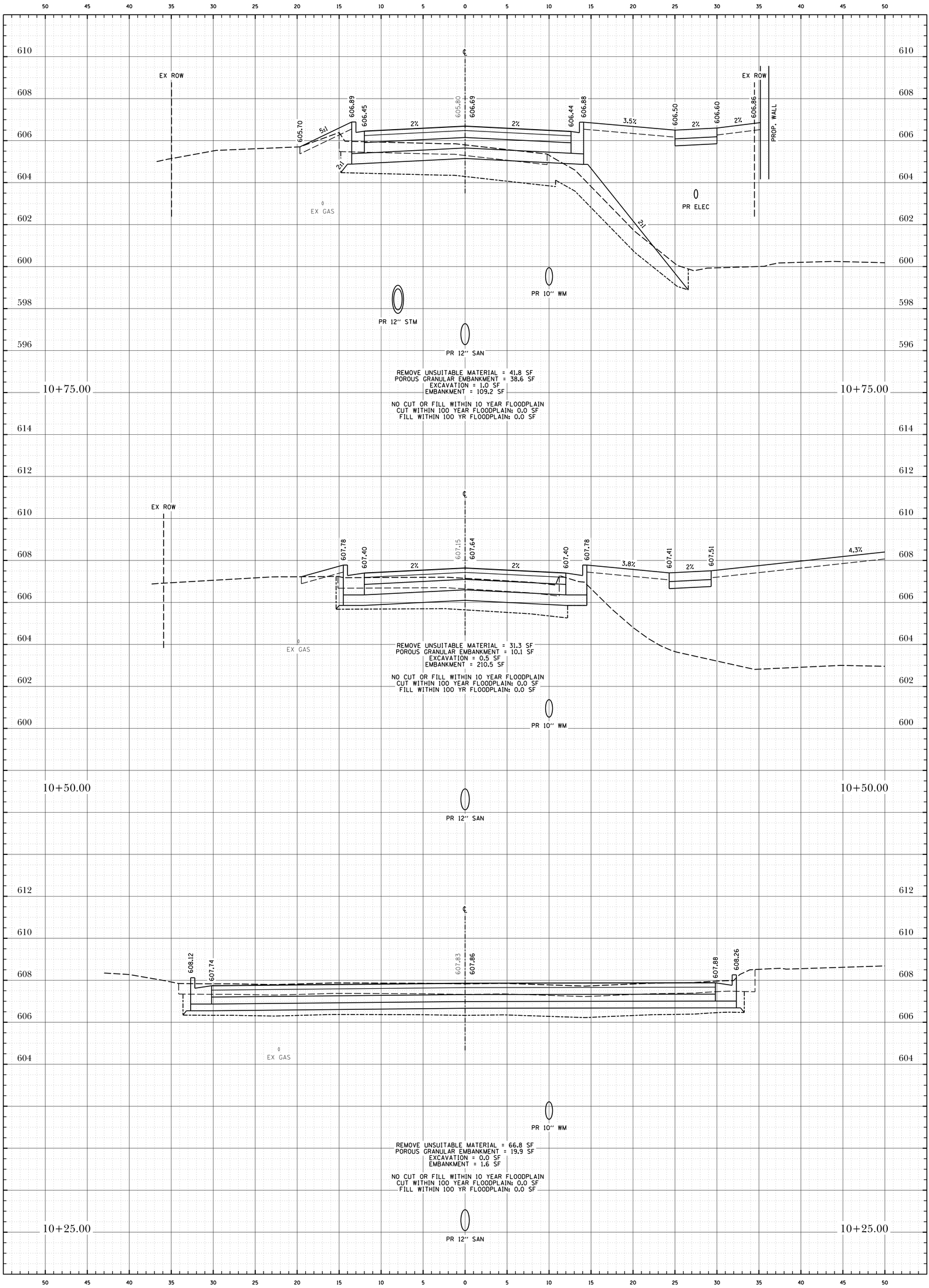

The Reserve at Hudson Crossing - Roadway Improvements

Cross Sections - Harrison Street

Oswego, Kendall County, Illinois

Project No.: SH0002

File Name: XS_HARRISON.dgn

Issue Date: 02/21/2019

Scale: HORZ: 1" = 5' VERT: 1" = 2'

Sheet Number 93

TROTTER and ASSOCIATES, INC.
ENGINEERS AND SURVEYORS
40W201 Wasco Road, Suite D
St. Charles, IL 60175
Ph.: 630-587-0470 • Fax: 630-587-0475

PROJECT STAFF	ISSUE	REVISIONS	DATE
PROJECT MANAGER:			
ENGINEER:			
ENGINEER:			
ENGINEER:	5.	ISSUED FOR BIDDING	2/21/19
TECHNICIAN:	4.	PER VILLAGE OF OSWEGO, IDOT, FOX METRO	2/15/19
TECHNICIAN:	3.	REVISIONS PER VILLAGE OF OSWEGO REVIEW	1/11/19
	2.	REVISIONS PER VILLAGE OF OSWEGO REVIEW	12/4/18
	1.	REVISIONS PER VILLAGE OF OSWEGO REVIEW	11/21/18

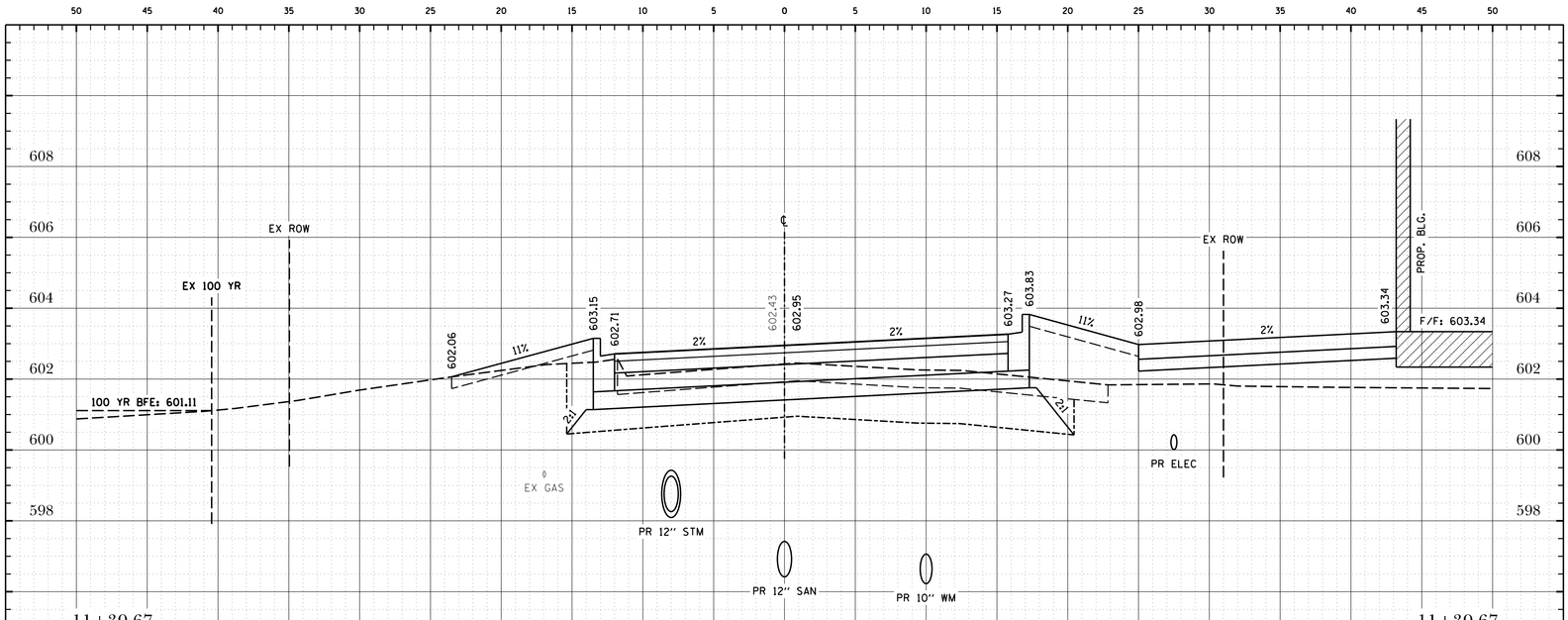

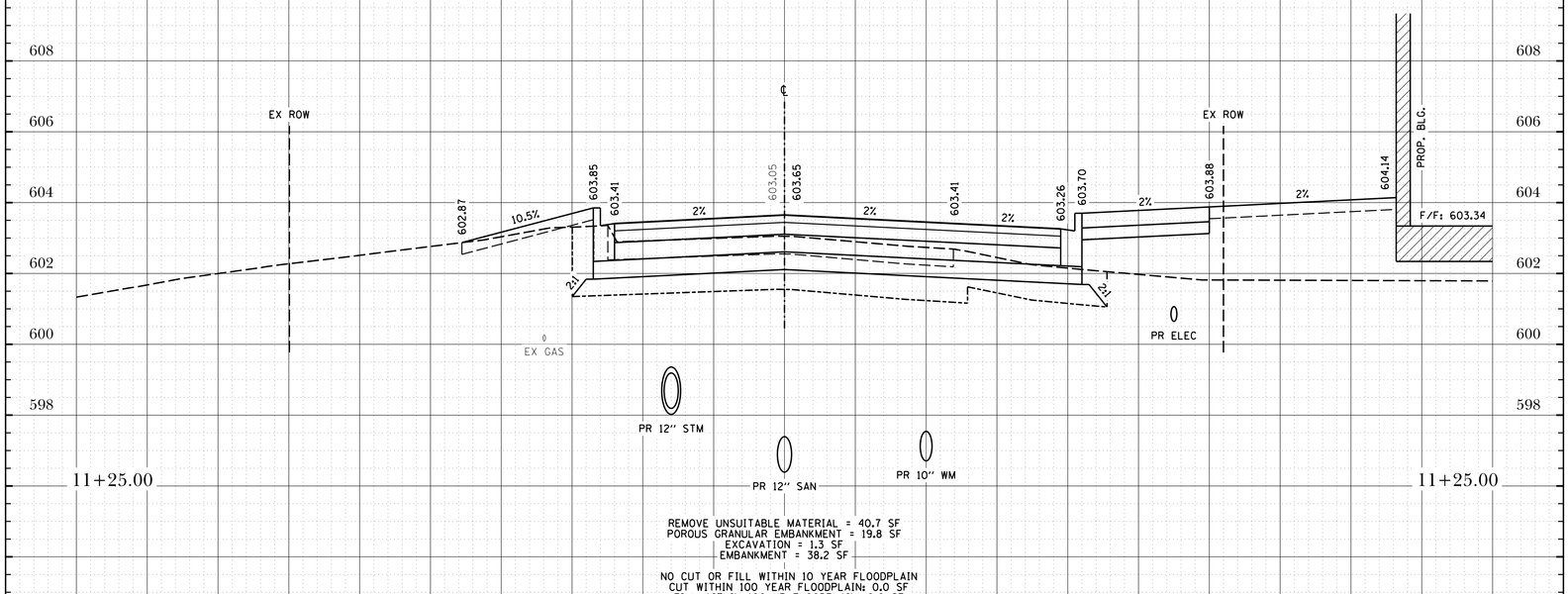

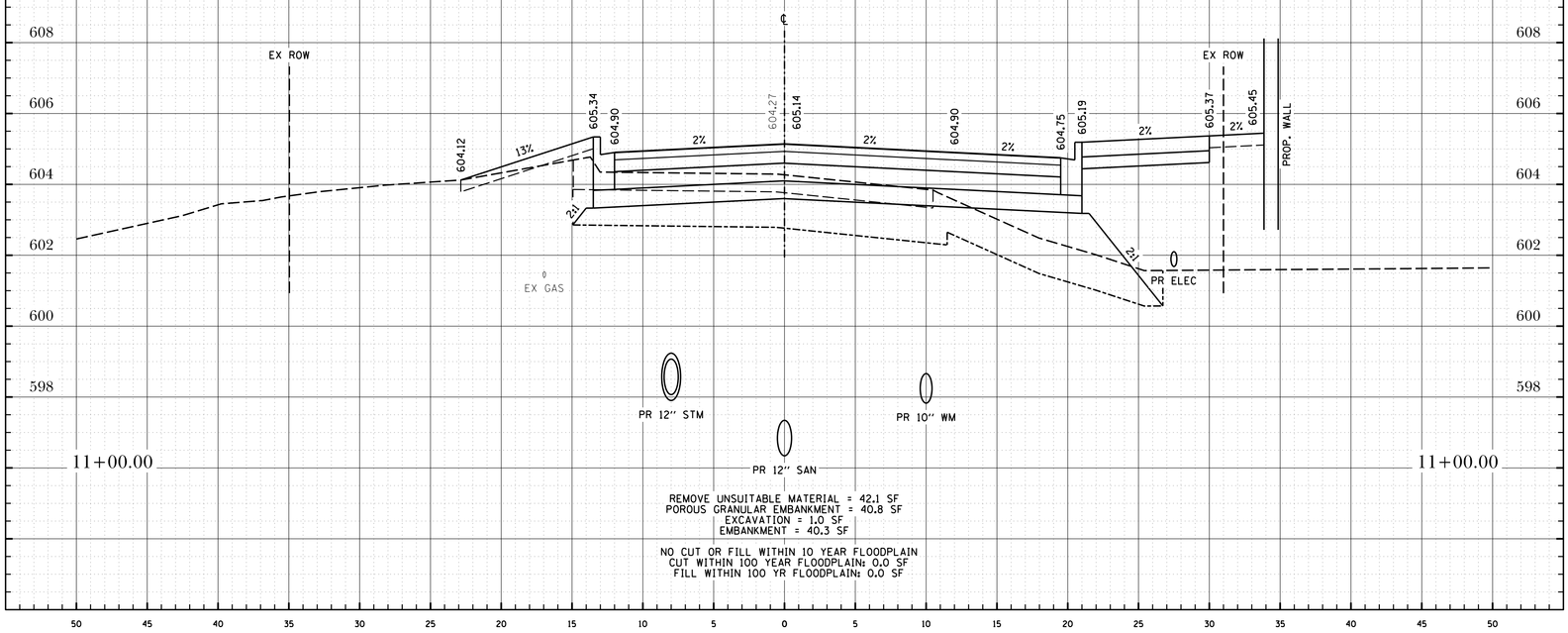

Project No.: SH0002

File Name: XS_HARRISON.dgn

Issue Date: 12/27/2019

Scale: HORZ: 1" = 5' VERT: 1" = 2'

Sheet Number 94

The Reserve at Hudson Crossing - Roadway Improvements

Cross Sections - Harrison Street

Oswego, Kendall County, Illinois

TROTTER and ASSOCIATES, INC.
ENGINEERS AND SURVEYORS
40W201 Wasco Road, Suite D
St. Charles, IL 60175
Ph.: 630-587-0470 • Fax: 630-587-0475

PROJECT STAFF	ISSUE	REVISIONS	DATE
PROJECT MANAGER:			
ENGINEER:			
ENGINEER:			
ENGINEER:	5.	ISSUED FOR BIDDING	2/21/19
TECHNICIAN:	4.	PER VILLAGE OF OSWEGO, IDOT, FOX METRO	2/15/19
TECHNICIAN:	3.	REVISIONS PER VILLAGE OF OSWEGO REVIEW	1/11/19
	2.	REVISIONS PER VILLAGE OF OSWEGO REVIEW	12/4/18
	1.	REVISIONS PER VILLAGE OF OSWEGO REVIEW	11/21/18

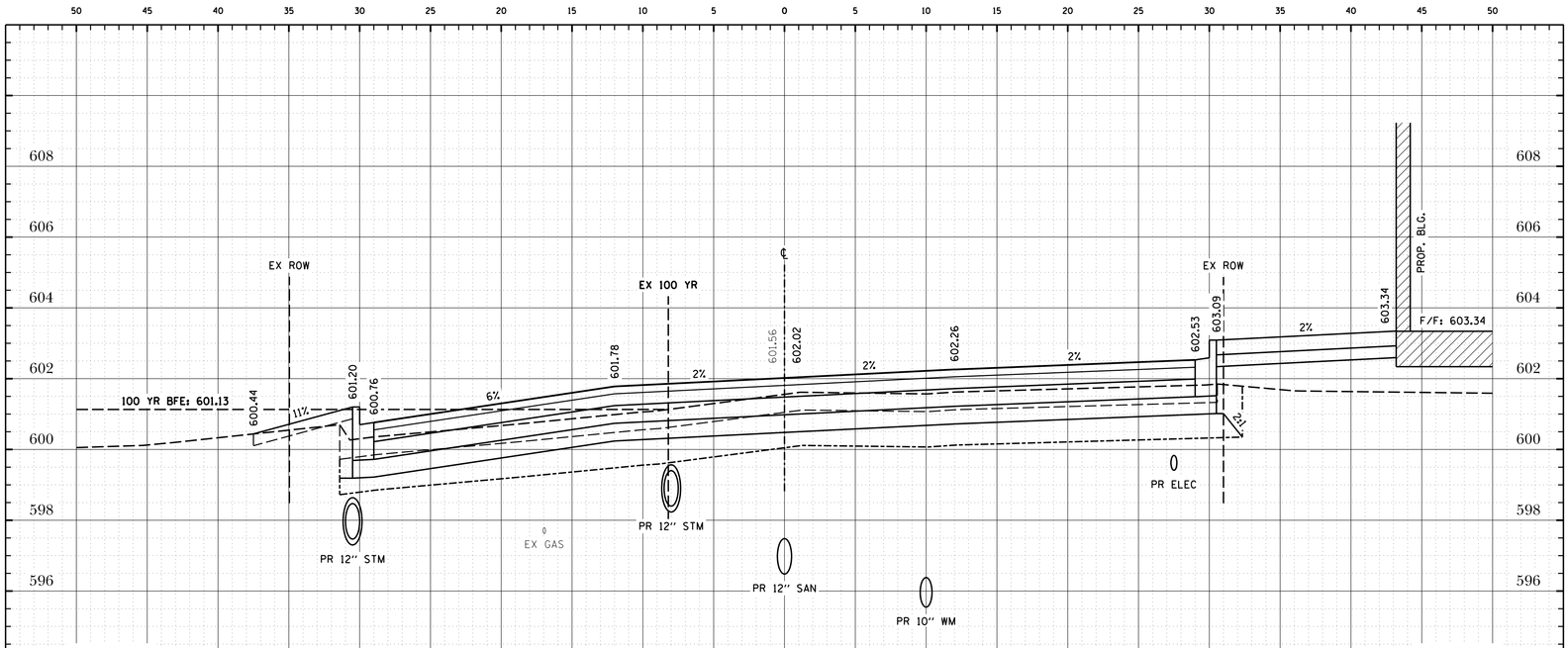

REMOVE UNSUITABLE MATERIAL = 64.6 SF
POROUS GRANULAR EMBANKMENT = 36.9 SF
EXCAVATION = 0.8 SF
EMBANKMENT = 13.3 SF

NO CUT OR FILL WITHIN 10 YEAR FLOODPLAIN
CUT WITHIN 100 YEAR FLOODPLAIN: 0.0 SF
FILL WITHIN 100 YR FLOODPLAIN: 9.8 SF

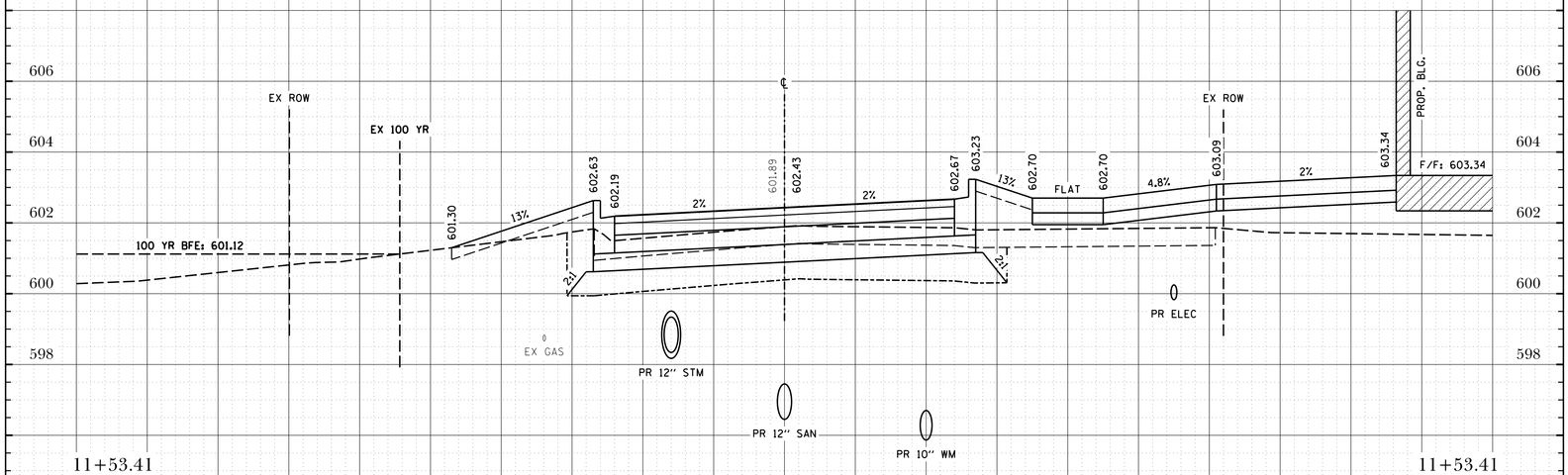

REMOVE UNSUITABLE MATERIAL = 32.7 SF
POROUS GRANULAR EMBANKMENT = 18.5 SF
EXCAVATION = 0.6 SF
EMBANKMENT = 29.2 SF

NO CUT OR FILL WITHIN 10 YEAR FLOODPLAIN
CUT WITHIN 100 YEAR FLOODPLAIN: 0.0 SF
FILL WITHIN 100 YR FLOODPLAIN: 0.0 SF

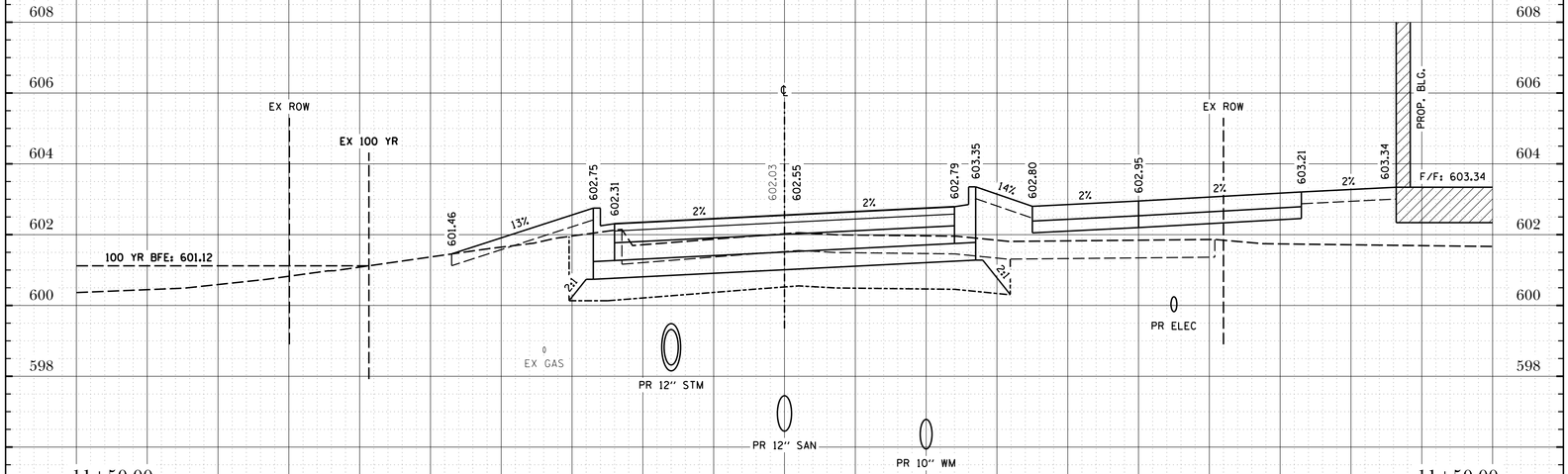

REMOVE UNSUITABLE MATERIAL = 34.6 SF
POROUS GRANULAR EMBANKMENT = 18.5 SF
EXCAVATION = 0.8 SF
EMBANKMENT = 33.2 SF

NO CUT OR FILL WITHIN 10 YEAR FLOODPLAIN
CUT WITHIN 100 YEAR FLOODPLAIN: 0.0 SF
FILL WITHIN 100 YR FLOODPLAIN: 0.0 SF

Project No.: SH0002
File Name: XS_H4B815CN.dgn
Issue Date: 12/21/2018
Scale: HORZ: 1" = 5' VERT: 1" = 2'
Sheet Number 95

The Reserve at Hudson Crossing - Roadway Improvements

Cross Sections - Harrison Street

Oswego, Kendall County, Illinois

TROTTER and ASSOCIATES, INC.
ENGINEERS AND SURVEYORS
40W201 Wasco Road, Suite D
St. Charles, IL 60175
Ph.: 630-587-0470 • Fax: 630-587-0475

PROJECT STAFF	ISSUE	REVISIONS	DATE
PROJECT MANAGER:			
ENGINEER:			
ENGINEER:			
ENGINEER:	5.	ISSUED FOR BIDDING	2/21/19
TECHNICIAN:	4.	PER VILLAGE OF OSWEGO, IDOT, FOX METRO	2/15/19
TECHNICIAN:	3.	REVISIONS PER VILLAGE OF OSWEGO REVIEW	1/11/19
	2.	REVISIONS PER VILLAGE OF OSWEGO REVIEW	12/4/18
	1.	REVISIONS PER VILLAGE OF OSWEGO REVIEW	11/21/18

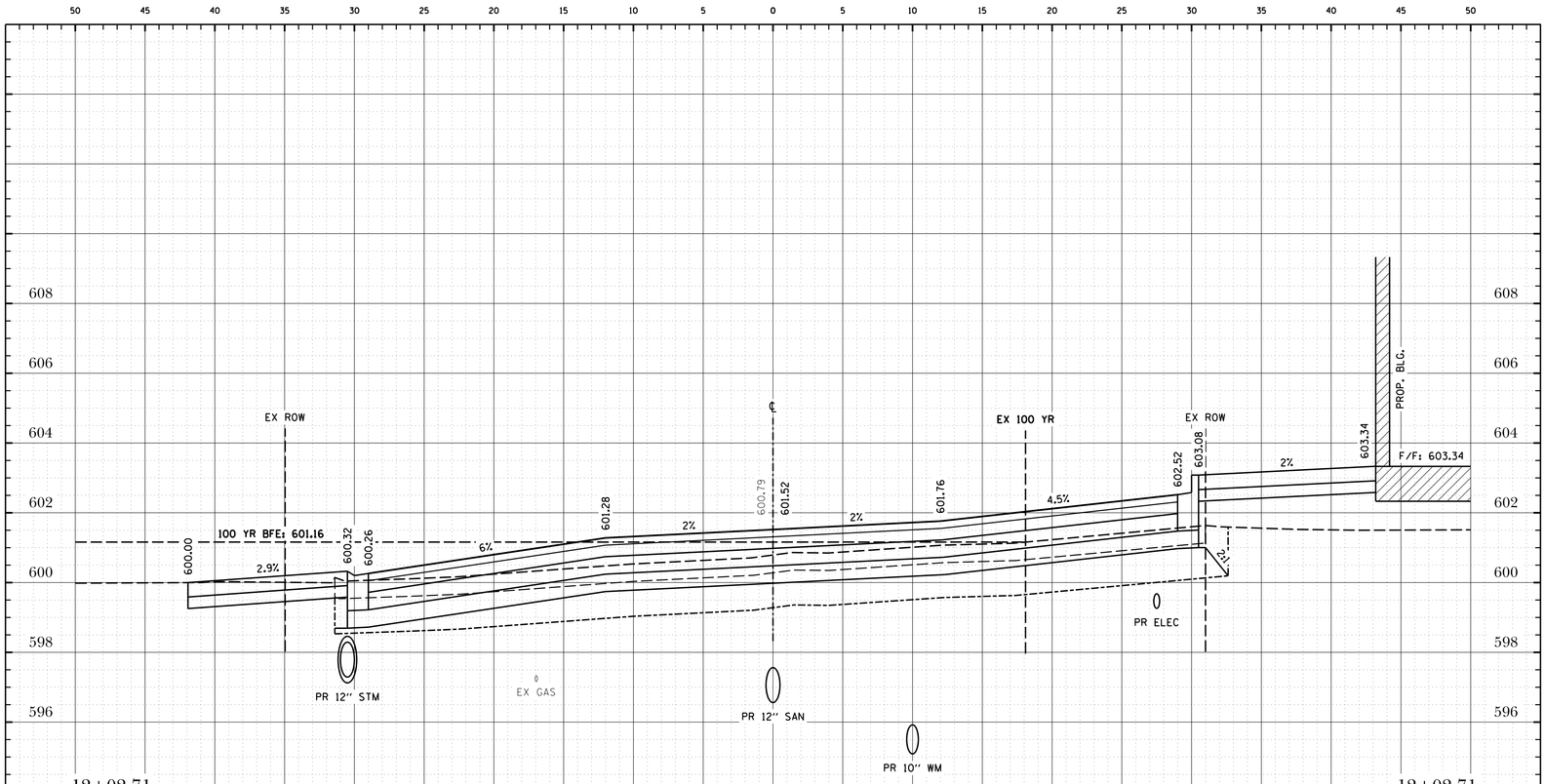

REMOVE UNSUITABLE MATERIAL = 64.8 SF
POROUS GRANULAR EMBANKMENT = 42.4 SF
EXCAVATION = 6.4 SF
EMBANKMENT = 14.3 SF

NO CUT OR FILL WITHIN 10 YEAR FLOODPLAIN
CUT WITHIN 100 YEAR FLOODPLAIN: 0.0 SF
FILL WITHIN 100 YR FLOODPLAIN: 20.6 SF

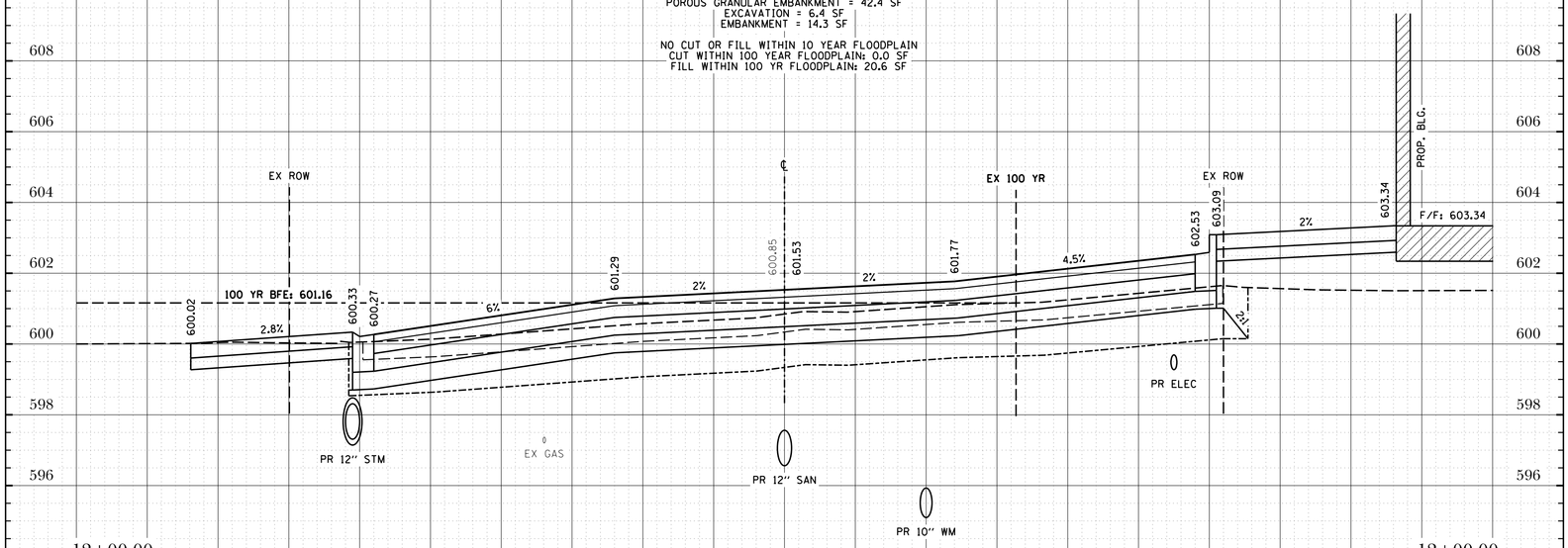

REMOVE UNSUITABLE MATERIAL = 64.8 SF
POROUS GRANULAR EMBANKMENT = 40.9 SF
EXCAVATION = 6.8 SF
EMBANKMENT = 13.9 SF

NO CUT OR FILL WITHIN 10 YEAR FLOODPLAIN
CUT WITHIN 100 YEAR FLOODPLAIN: 0.0 SF
FILL WITHIN 100 YR FLOODPLAIN: 18.8 SF

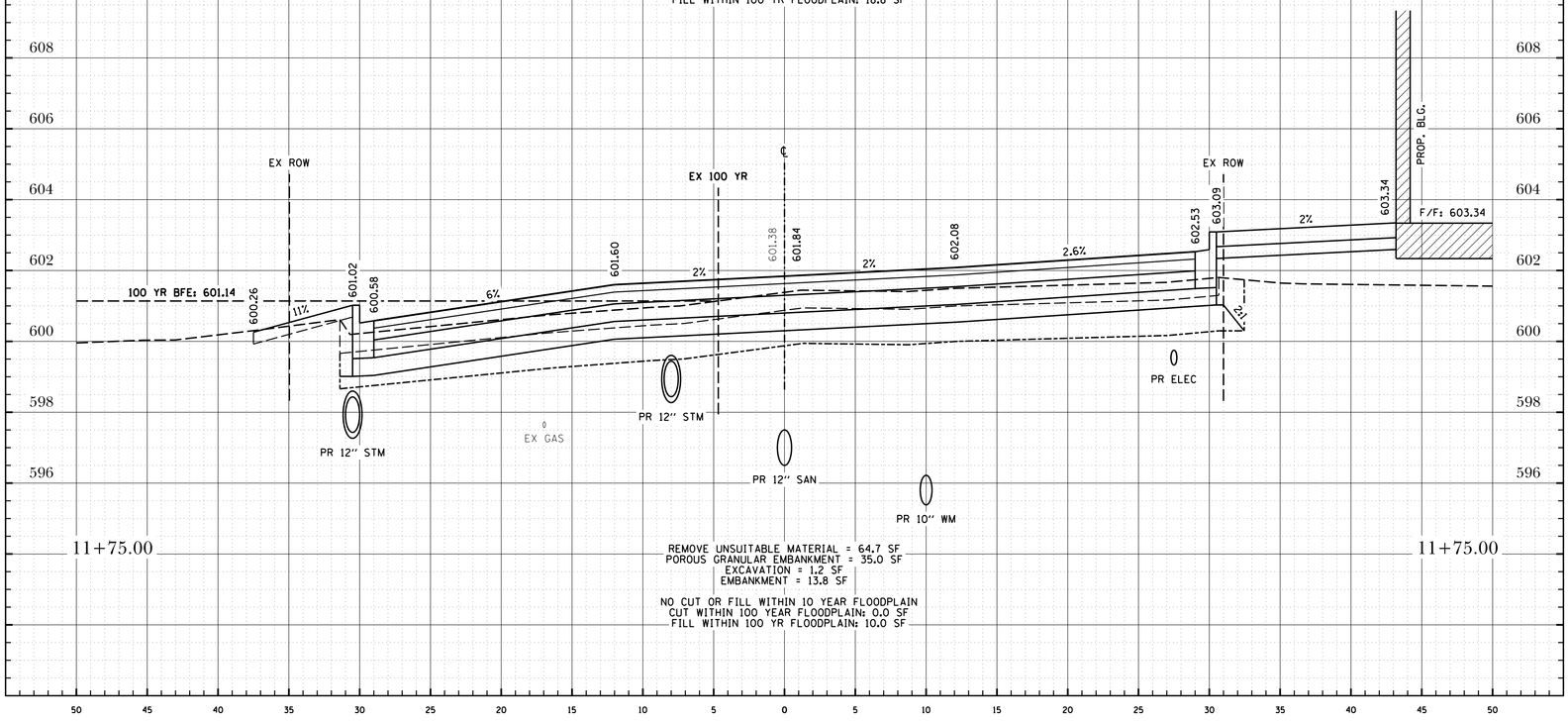

REMOVE UNSUITABLE MATERIAL = 64.7 SF
POROUS GRANULAR EMBANKMENT = 35.0 SF
EXCAVATION = 1.2 SF
EMBANKMENT = 13.8 SF

NO CUT OR FILL WITHIN 10 YEAR FLOODPLAIN
CUT WITHIN 100 YEAR FLOODPLAIN: 0.0 SF
FILL WITHIN 100 YR FLOODPLAIN: 10.0 SF

Sheet Number 96

Scale: HORZ: 1" = 5' VERT: 1" = 2'

Issue Date: 2/21/2019

File Name: XS_MAIN15ON.dgn

Project No.: SH0002

The Reserve at Hudson Crossing - Roadway Improvements

Cross Sections - Harrison Street

Oswego, Kendall County, Illinois

TROTTER and ASSOCIATES, INC.
ENGINEERS AND SURVEYORS
40W201 Wasco Road, Suite D
St. Charles, IL 60175
Ph.: 630-587-0470 • Fax: 630-587-0475

PROJECT STAFF	ISSUE	REVISIONS	DATE
PROJECT MANAGER:			
ENGINEER:			
ENGINEER:			
ENGINEER:	5.	ISSUED FOR BIDDING	2/21/19
TECHNICIAN:	4.	PER VILLAGE OF OSWEGO, IDOT, FOX METRO	2/15/19
TECHNICIAN:	3.	REVISIONS PER VILLAGE OF OSWEGO REVIEW	1/11/19
	2.	REVISIONS PER VILLAGE OF OSWEGO REVIEW	12/4/18
	1.	REVISIONS PER VILLAGE OF OSWEGO REVIEW	11/21/18

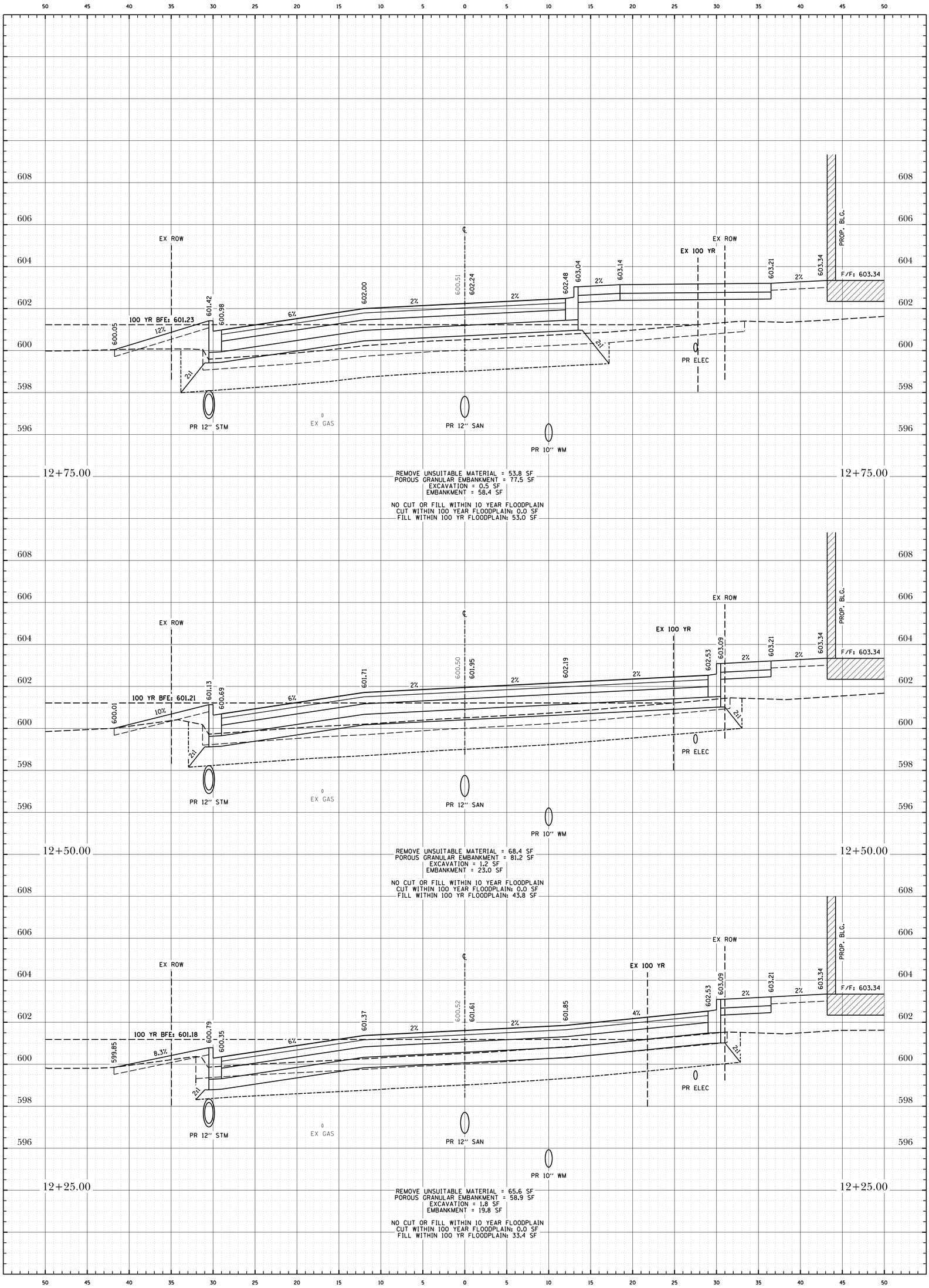

Project No.: SH0002

File Name: XS_HARRISON.dgn

Issue Date: 12/27/2019

Scale: HORZ: 1" = 5' VERT: 1" = 2'

Sheet Number 97

The Reserve at Hudson Crossing - Roadway Improvements

Cross Sections - Harrison Street

Oswego, Kendall County, Illinois

TROTTER and ASSOCIATES, INC.
ENGINEERS AND SURVEYORS
40W201 Wasco Road, Suite D
St. Charles, IL 60175
Ph.: 630-587-0470 • Fax: 630-587-0475

PROJECT STAFF	ISSUE	REVISIONS	DATE
PROJECT MANAGER:			
ENGINEER:			
ENGINEER:			
ENGINEER:	5.	ISSUED FOR BIDDING	2/21/19
TECHNICIAN:	4.	PER VILLAGE OF OSWEGO, IDOT, FOX METRO	2/15/19
TECHNICIAN:	3.	REVISIONS PER VILLAGE OF OSWEGO REVIEW	1/11/19
	2.	REVISIONS PER VILLAGE OF OSWEGO REVIEW	12/4/18
	1.	REVISIONS PER VILLAGE OF OSWEGO REVIEW	11/21/18

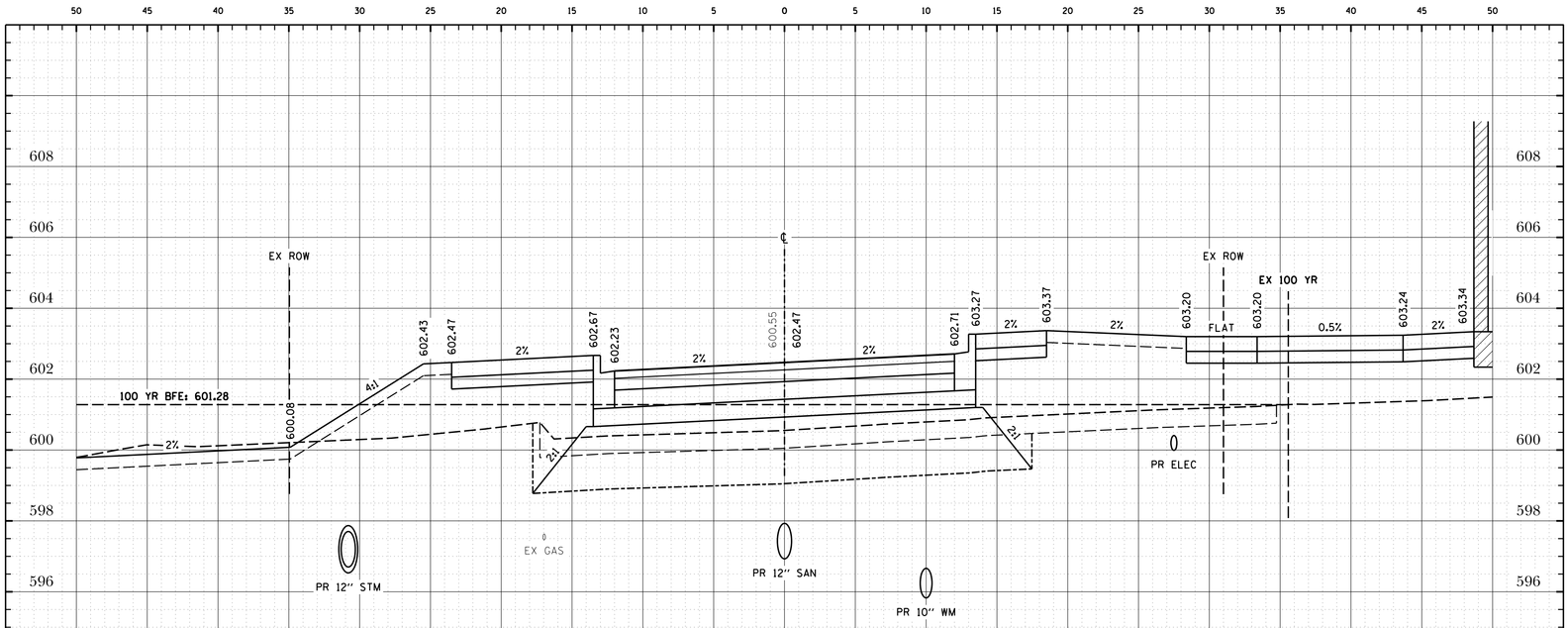

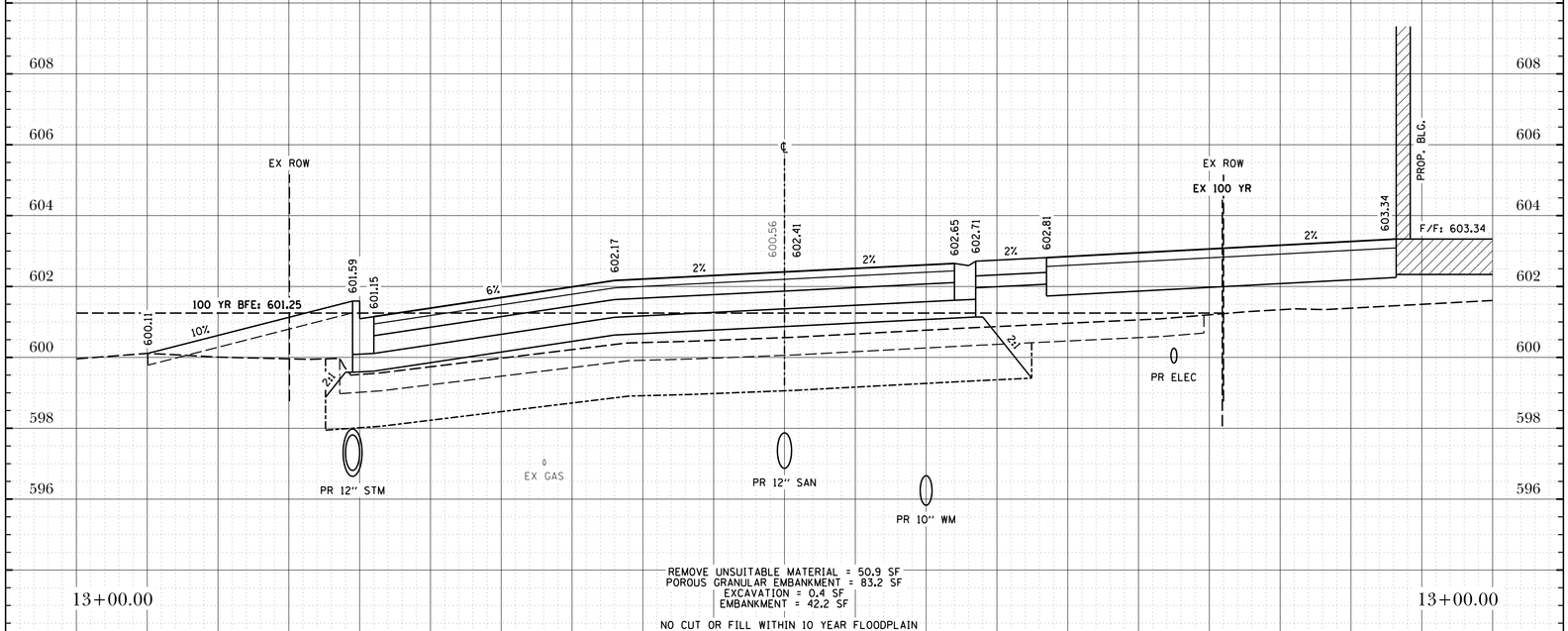

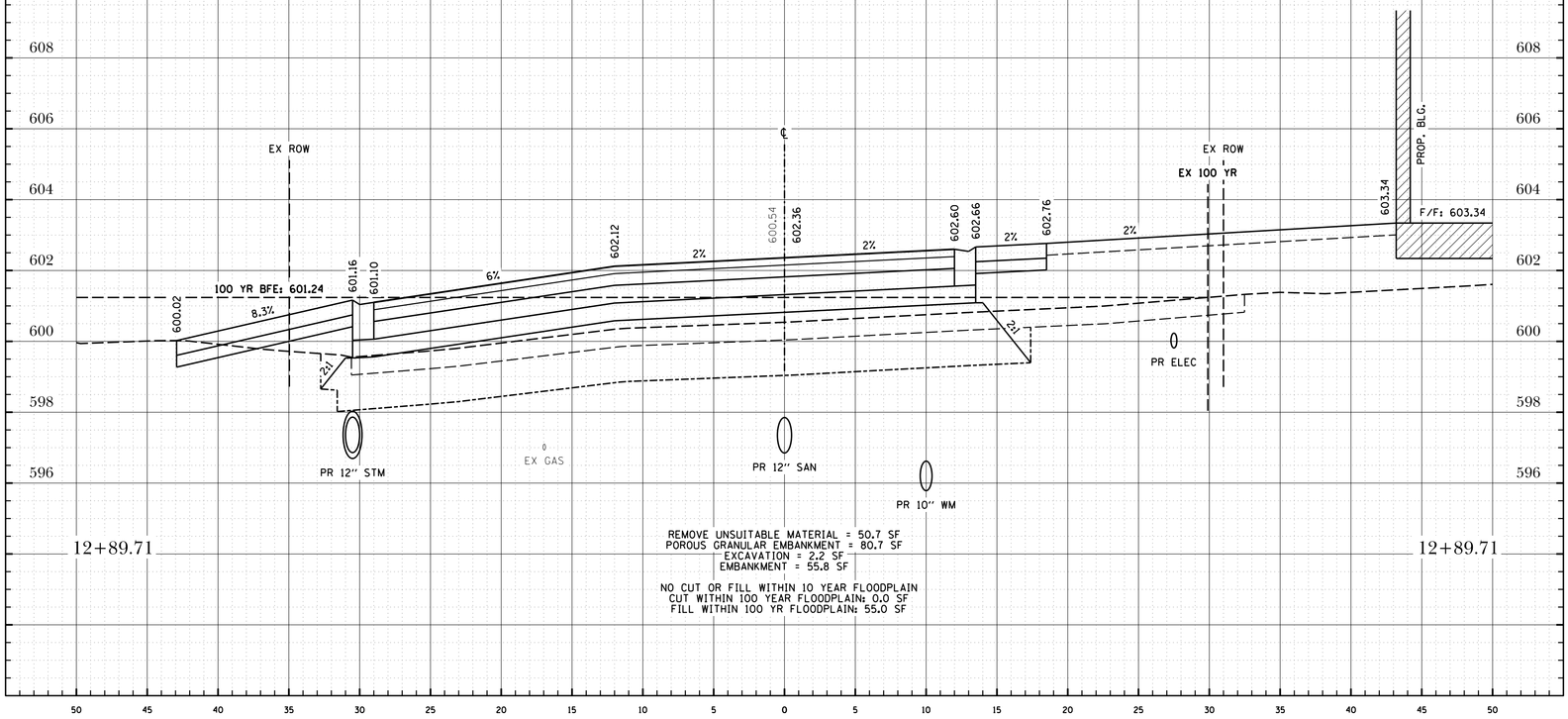

Project No.: SH0002

File Name: XS_HdBR15CN.dgn

Issue Date: 02/21/2019

Scale: HORZ: 1" = 5' VERT: 1" = 2'

Sheet Number 86

The Reserve at Hudson Crossing - Roadway Improvements

Cross Sections - Harrison Street

Oswego, Kendall County, Illinois

TROTTER and ASSOCIATES, INC.
ENGINEERS AND SURVEYORS
40W201 Wasco Road, Suite D
St. Charles, IL 60175
Ph.: 630-587-0470 • Fax: 630-587-0475

PROJECT STAFF	ISSUE	REVISIONS	DATE
PROJECT MANAGER:			
ENGINEER:			
ENGINEER:			
ENGINEER:	5.	ISSUED FOR BIDDING	2/21/19
TECHNICIAN:	4.	PER VILLAGE OF OSWEGO, IDOT, FOX METRO	2/15/19
TECHNICIAN:	3.	REVISIONS PER VILLAGE OF OSWEGO REVIEW	1/11/19
	2.	REVISIONS PER VILLAGE OF OSWEGO REVIEW	12/4/18
	1.	REVISIONS PER VILLAGE OF OSWEGO REVIEW	11/21/18

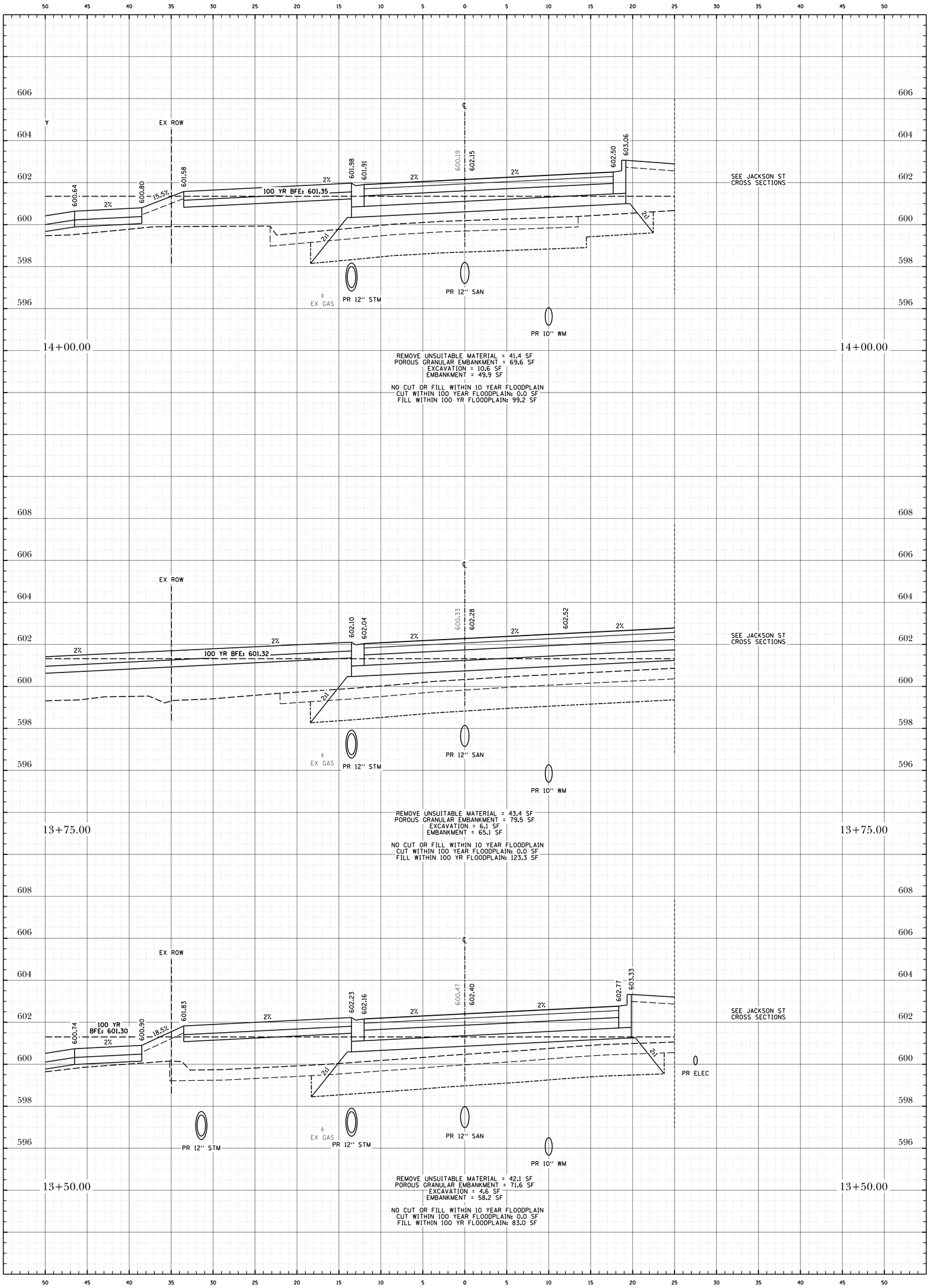

Sheet Number: 66

Scale: HORZ: 1" = 5' VERT: 1" = 2'

Issue Date: 12/27/2019

File Name: XS_HdBR15CN.dgn

Project No.: SH0002

The Reserve at Hudson Crossing - Roadway Improvements

Cross Sections - Harrison Street

Oswego, Kendall County, Illinois

TROTTER and ASSOCIATES, INC.
ENGINEERS AND SURVEYORS
40W201 Wasco Road, Suite D
St. Charles, IL 60175
Ph.: 630-587-0470 • Fax: 630-587-0475

PROJECT STAFF	ISSUE	REVISIONS	DATE
PROJECT MANAGER:			
ENGINEER:			
ENGINEER:			
ENGINEER:	5.	ISSUED FOR BIDDING	2/21/19
TECHNICIAN:	4.	PER VILLAGE OF OSWEGO, IDOT, FOX METRO	2/15/19
TECHNICIAN:	3.	REVISIONS PER VILLAGE OF OSWEGO REVIEW	1/11/19
	2.	REVISIONS PER VILLAGE OF OSWEGO REVIEW	12/4/18
	1.	REVISIONS PER VILLAGE OF OSWEGO REVIEW	11/21/18

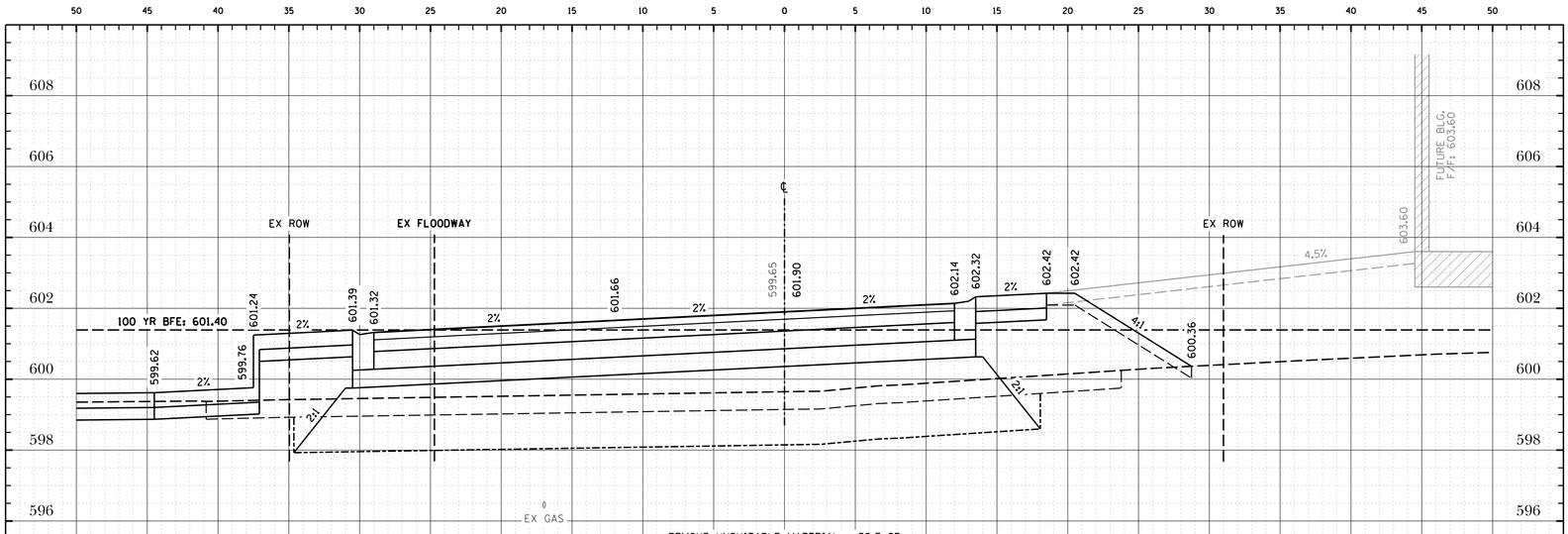

REMOVE UNSUITABLE MATERIAL = 52.7 SF
POROUS GRANULAR EMBANKMENT = 100.4 SF
EXCAVATION = 16.6 SF
EMBANKMENT = 33.9 SF

NO CUT OR FILL WITHIN 10 YEAR FLOODPLAIN
CUT WITHIN 100 YEAR FLOODPLAIN: 0.0 SF
FILL WITHIN 100 YR FLOODPLAIN: 112.7 SF

14+50.00 14+50.00

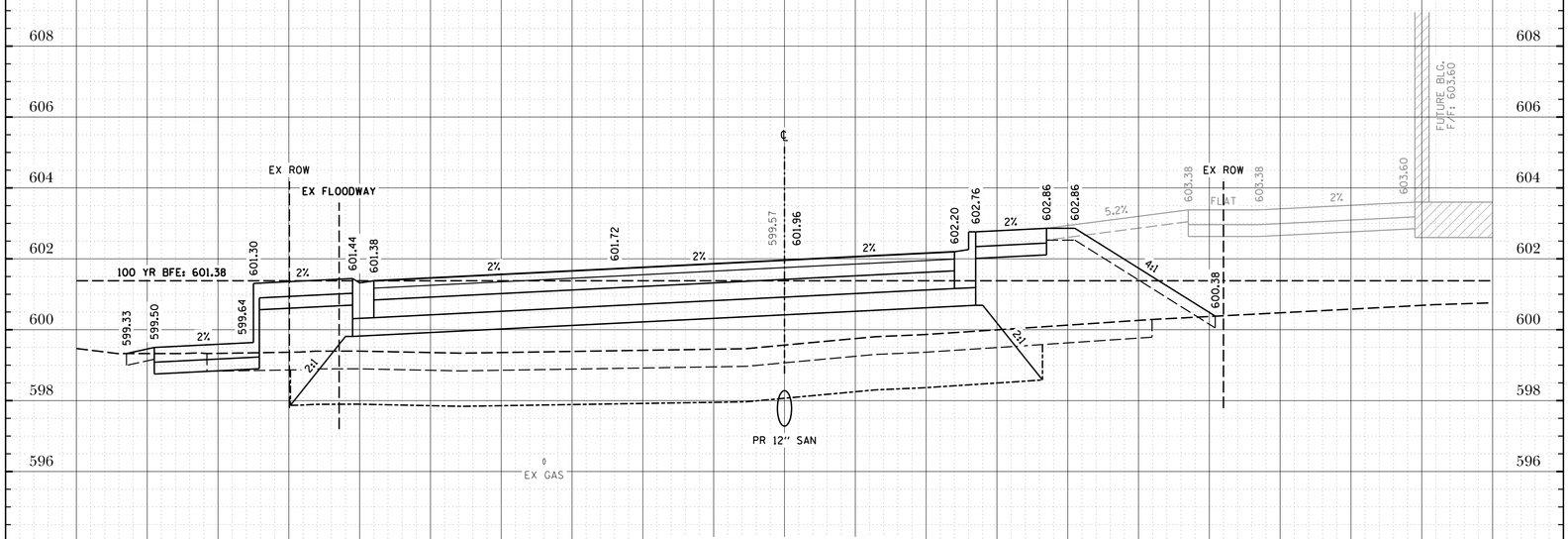

REMOVE UNSUITABLE MATERIAL = 53.1 SF
POROUS GRANULAR EMBANKMENT = 108.6 SF
EXCAVATION = 2.5 SF
EMBANKMENT = 41.8 SF

NO CUT OR FILL WITHIN 10 YEAR FLOODPLAIN
CUT WITHIN 100 YEAR FLOODPLAIN: 0.0 SF
FILL WITHIN 100 YR FLOODPLAIN: 115.8 SF

14+37.74 14+37.74

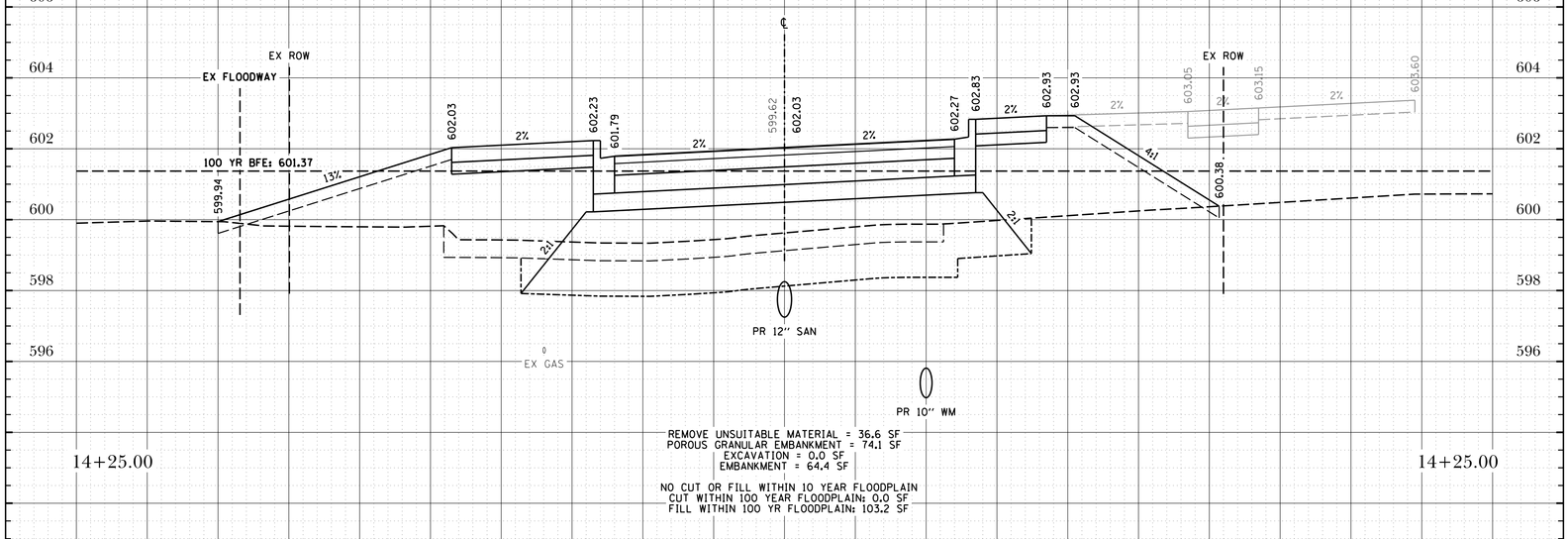

REMOVE UNSUITABLE MATERIAL = 36.6 SF
POROUS GRANULAR EMBANKMENT = 74.1 SF
EXCAVATION = 0.0 SF
EMBANKMENT = 64.4 SF

NO CUT OR FILL WITHIN 10 YEAR FLOODPLAIN
CUT WITHIN 100 YEAR FLOODPLAIN: 0.0 SF
FILL WITHIN 100 YR FLOODPLAIN: 103.2 SF

14+25.00 14+25.00

Project No.: SH0002

File Name: XS_HARRISON.dgn

Issue Date: 12/27/2019

Scale: HORZ: 1" = 5' VERT: 1" = 2'

Sheet Number 100

The Reserve at Hudson Crossing - Roadway Improvements

Cross Sections - Harrison Street

Oswego, Kendall County, Illinois

TROTTER and ASSOCIATES, INC.
ENGINEERS AND SURVEYORS
40W201 Wasco Road, Suite D
St. Charles, IL 60175
Ph.: 630-587-0470 • Fax: 630-587-0475

PROJECT STAFF	ISSUE	REVISIONS	DATE
PROJECT MANAGER:			
ENGINEER:			
ENGINEER:			
ENGINEER:	5.	ISSUED FOR BIDDING	2/21/19
TECHNICIAN:	4.	PER VILLAGE OF OSWEGO, IDOT, FOX METRO	2/15/19
TECHNICIAN:	3.	REVISIONS PER VILLAGE OF OSWEGO REVIEW	1/11/19
	2.	REVISIONS PER VILLAGE OF OSWEGO REVIEW	12/4/18
	1.	REVISIONS PER VILLAGE OF OSWEGO REVIEW	11/21/18

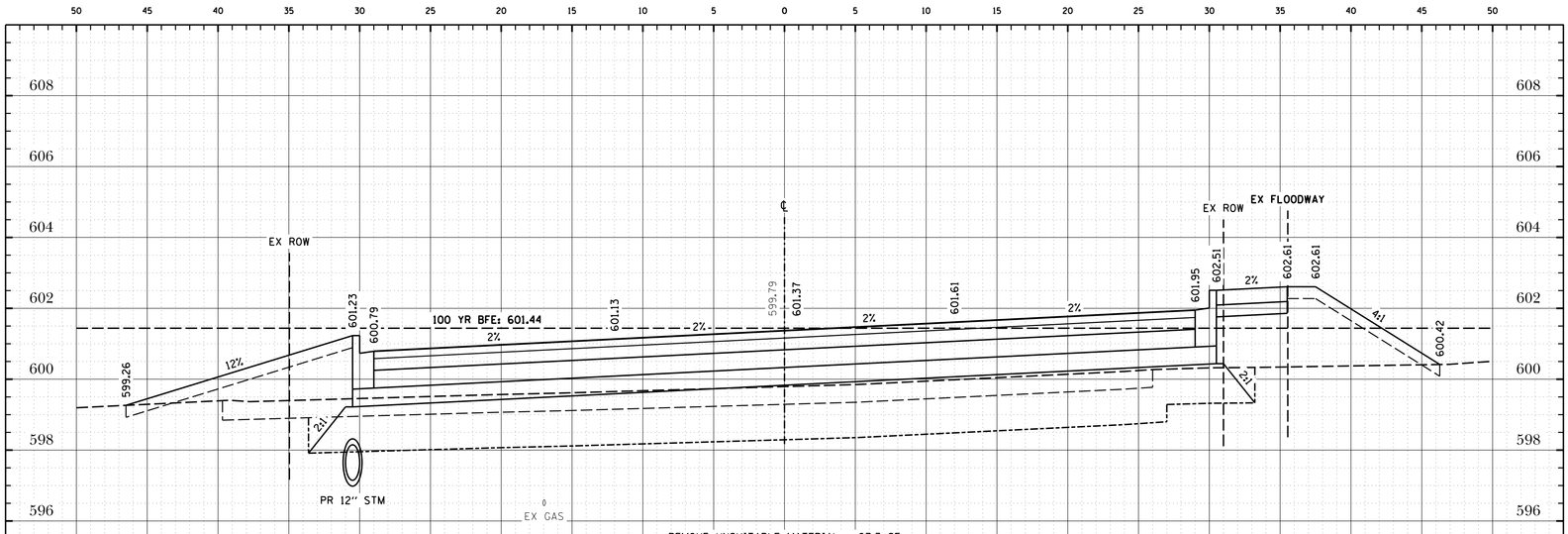

REMOVE UNSUITABLE MATERIAL = 67.3 SF
POROUS GRANULAR EMBANKMENT = 93.5 SF
EXCAVATION = 0.6 SF
EMBANKMENT = 33.9 SF

NO CUT OR FILL WITHIN 10 YEAR FLOODPLAIN
CUT WITHIN 100 YEAR FLOODPLAIN: 0.0 SF
FILL WITHIN 100 YR FLOODPLAIN: 115.3 SF

15+00.00 15+00.00

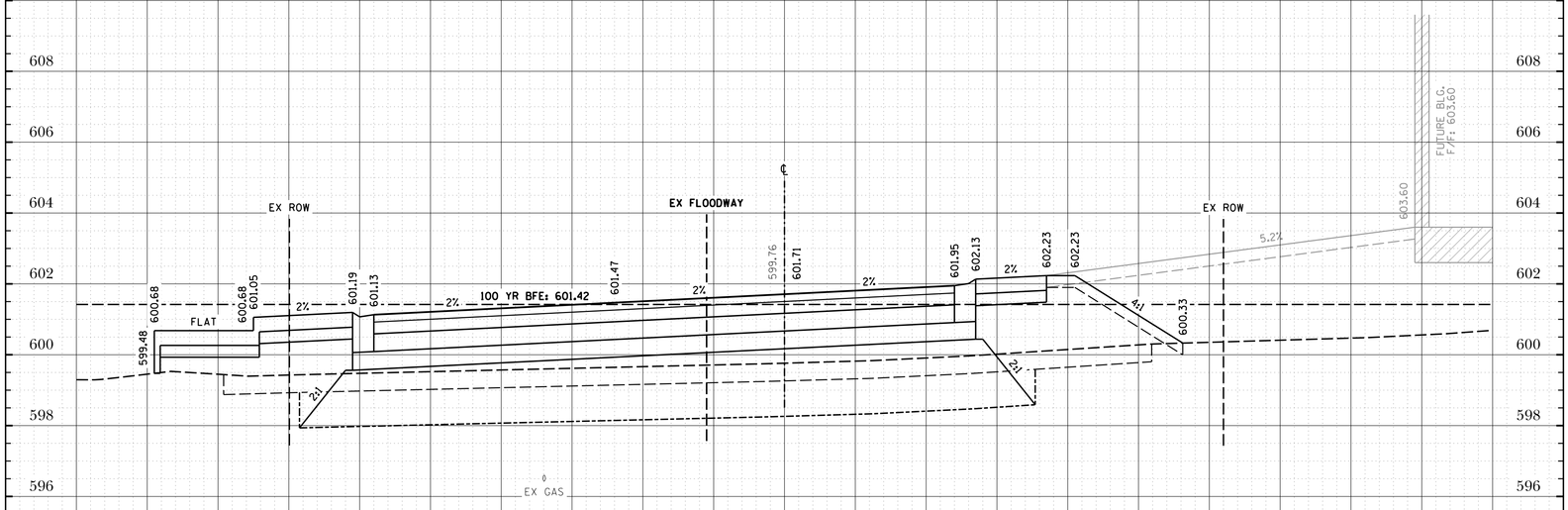

REMOVE UNSUITABLE MATERIAL = 52.0 SF
POROUS GRANULAR EMBANKMENT = 87.7 SF
EXCAVATION = 0.0 SF
EMBANKMENT = 36.2 SF

NO CUT OR FILL WITHIN 10 YEAR FLOODPLAIN
CUT WITHIN 100 YEAR FLOODPLAIN: 0.0 SF
FILL WITHIN 100 YR FLOODPLAIN: 109.9 SF

14+75.00 14+75.00

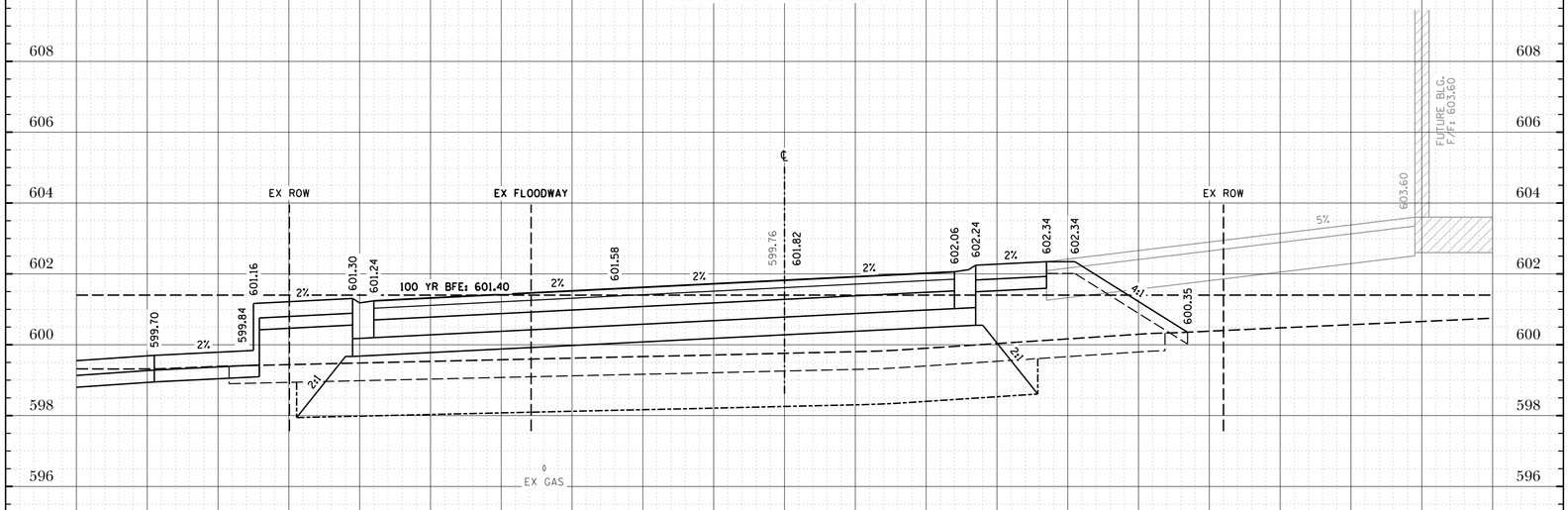

REMOVE UNSUITABLE MATERIAL = 52.3 SF
POROUS GRANULAR EMBANKMENT = 93.3 SF
EXCAVATION = 9.4 SF
EMBANKMENT = 34.0 SF

NO CUT OR FILL WITHIN 10 YEAR FLOODPLAIN
CUT WITHIN 100 YEAR FLOODPLAIN: 0.0 SF
FILL WITHIN 100 YR FLOODPLAIN: 108.2 SF

14+62.44 14+62.44

Project No.: SH0002

File Name: XS_HdBRIDGN.dgn

Issue Date: 02/21/2019

Scale: HORZ: 1" = 5' VERT: 1" = 2'

Sheet Number 101

The Reserve at Hudson Crossing - Roadway Improvements

Cross Sections - Harrison Street

Oswego, Kendall County, Illinois

TROTTER and ASSOCIATES, INC.
ENGINEERS AND SURVEYORS
40W201 Wasco Road, Suite D
St. Charles, IL 60175
Ph.: 630-587-0470 • Fax: 630-587-0475

PROJECT STAFF	ISSUE	REVISIONS	DATE
PROJECT MANAGER:			
ENGINEER:			
ENGINEER:			
ENGINEER:	5.	ISSUED FOR BIDDING	2/21/19
TECHNICIAN:	4.	PER VILLAGE OF OSWEGO, IDOT, FOX METRO	2/15/19
TECHNICIAN:	3.	REVISIONS PER VILLAGE OF OSWEGO REVIEW	1/11/19
	2.	REVISIONS PER VILLAGE OF OSWEGO REVIEW	12/4/18
	1.	REVISIONS PER VILLAGE OF OSWEGO REVIEW	11/21/18

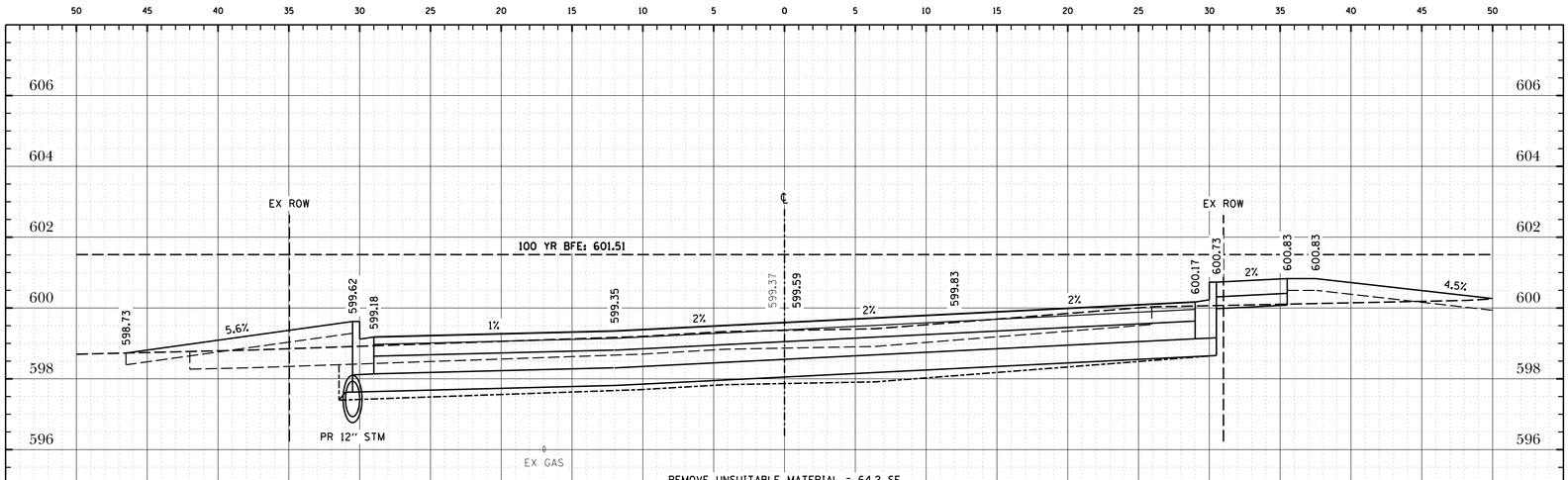

REMOVE UNSUITABLE MATERIAL = 64.2 SF
POROUS GRANULAR EMBANKMENT = 9.8 SF
EXCAVATION = 5.2 SF
EMBANKMENT = 10.1 SF

NO CUT OR FILL WITHIN 10 YEAR FLOODPLAIN
CUT WITHIN 100 YEAR FLOODPLAIN: 0.0 SF
FILL WITHIN 100 YR FLOODPLAIN: 27.9 SF

15+75.00 15+75.00

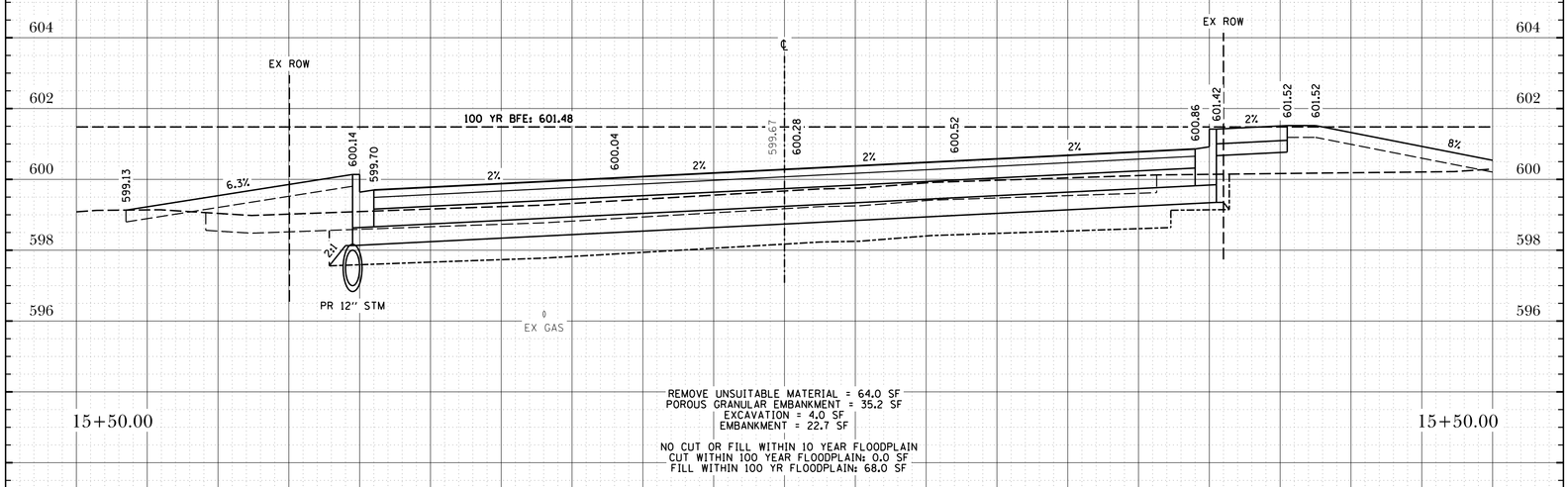

REMOVE UNSUITABLE MATERIAL = 64.0 SF
POROUS GRANULAR EMBANKMENT = 35.2 SF
EXCAVATION = 4.0 SF
EMBANKMENT = 22.7 SF

NO CUT OR FILL WITHIN 10 YEAR FLOODPLAIN
CUT WITHIN 100 YEAR FLOODPLAIN: 0.0 SF
FILL WITHIN 100 YR FLOODPLAIN: 68.0 SF

15+50.00 15+50.00

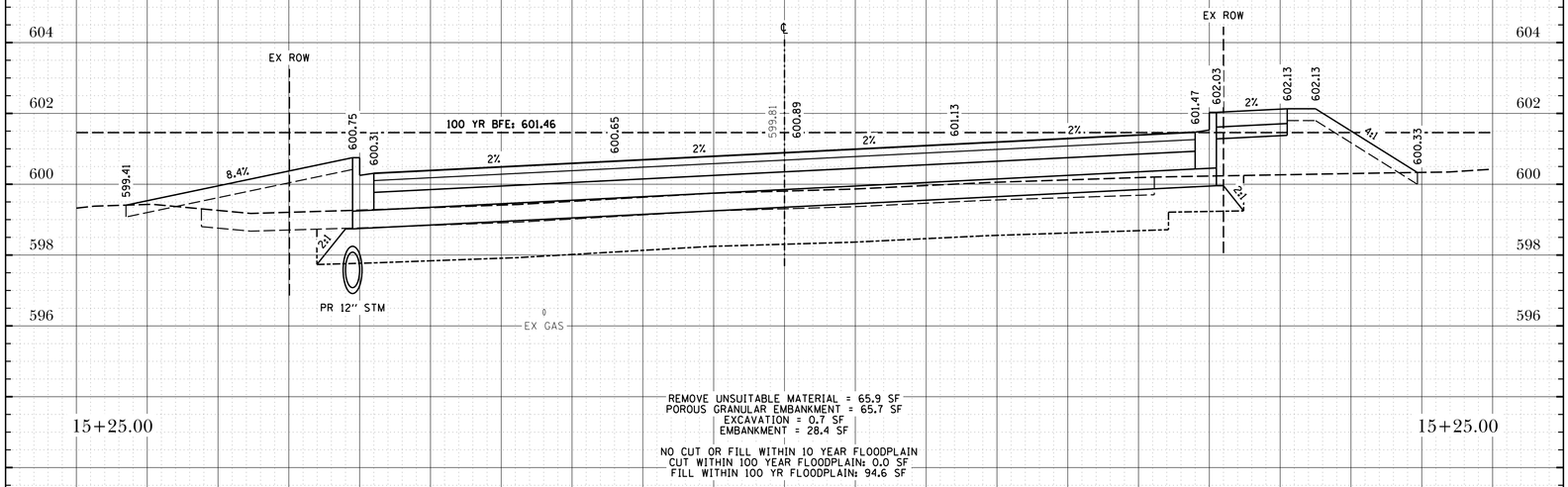

REMOVE UNSUITABLE MATERIAL = 65.9 SF
POROUS GRANULAR EMBANKMENT = 65.7 SF
EXCAVATION = 0.7 SF
EMBANKMENT = 28.4 SF

NO CUT OR FILL WITHIN 10 YEAR FLOODPLAIN
CUT WITHIN 100 YEAR FLOODPLAIN: 0.0 SF
FILL WITHIN 100 YR FLOODPLAIN: 94.6 SF

15+25.00 15+25.00

The Reserve at Hudson Crossing - Roadway Improvements

Cross Sections - Harrison Street

Oswego, Kendall County, Illinois

TROTTER and ASSOCIATES, INC.
ENGINEERS AND SURVEYORS
40W201 Wasco Road, Suite D
St. Charles, IL 60175
Ph.: 630-587-0470 • Fax: 630-587-0475

PROJECT STAFF	ISSUE	REVISIONS	DATE
PROJECT MANAGER:			
ENGINEER:			
ENGINEER:			
ENGINEER:	5.	ISSUED FOR BIDDING	2/21/19
TECHNICIAN:	4.	PER VILLAGE OF OSWEGO, IDOT, FOX METRO	2/15/19
TECHNICIAN:	3.	REVISIONS PER VILLAGE OF OSWEGO REVIEW	1/11/19
	2.	REVISIONS PER VILLAGE OF OSWEGO REVIEW	12/4/18
	1.	REVISIONS PER VILLAGE OF OSWEGO REVIEW	11/21/18

Project No.: 5H0002
File Name: XS_HARRISON.dgn
Issue Date: 10/27/2017
Scale: HORZ: 1" = 5' VERT: 1" = 2'
Sheet Number 102

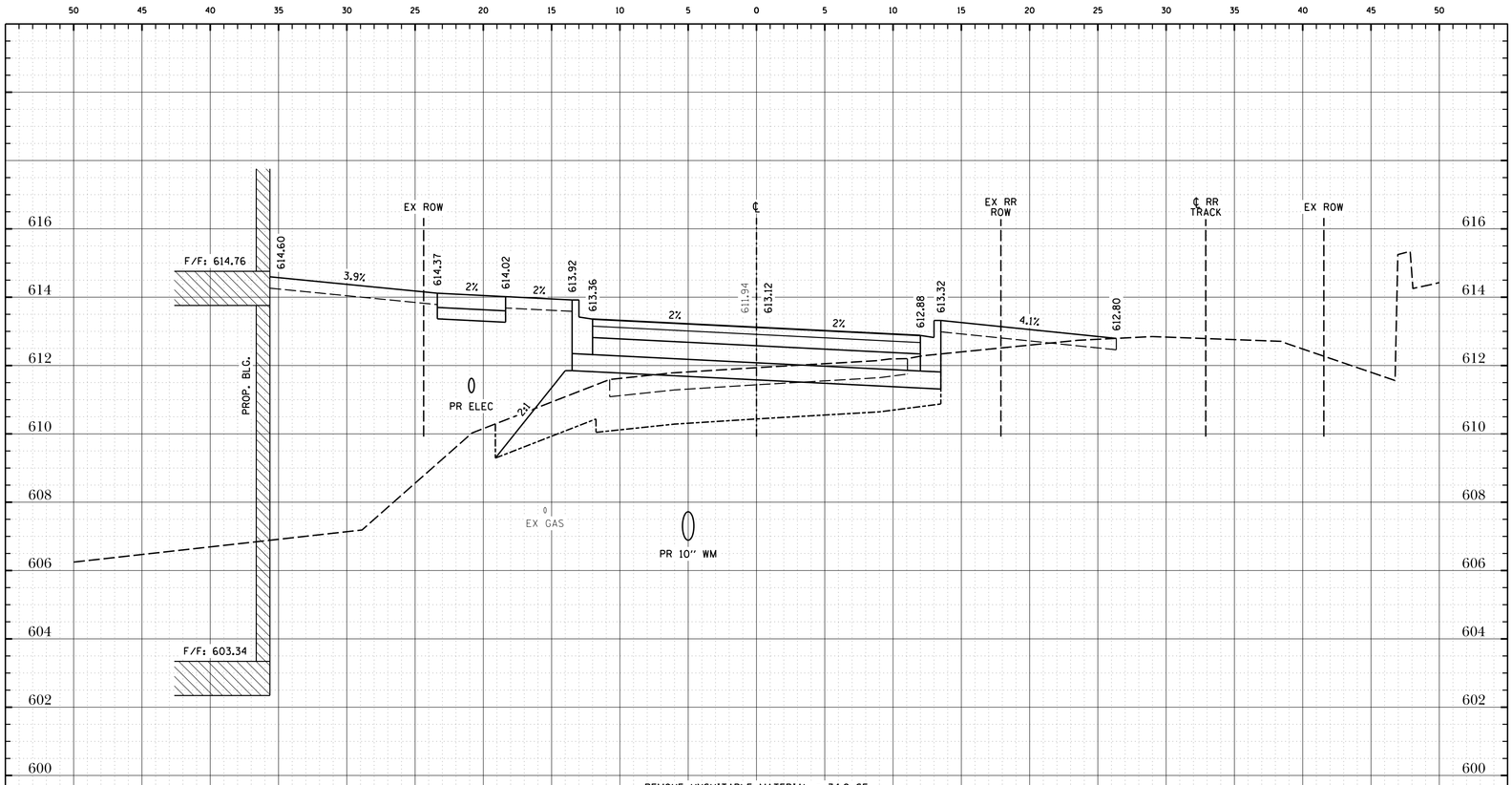

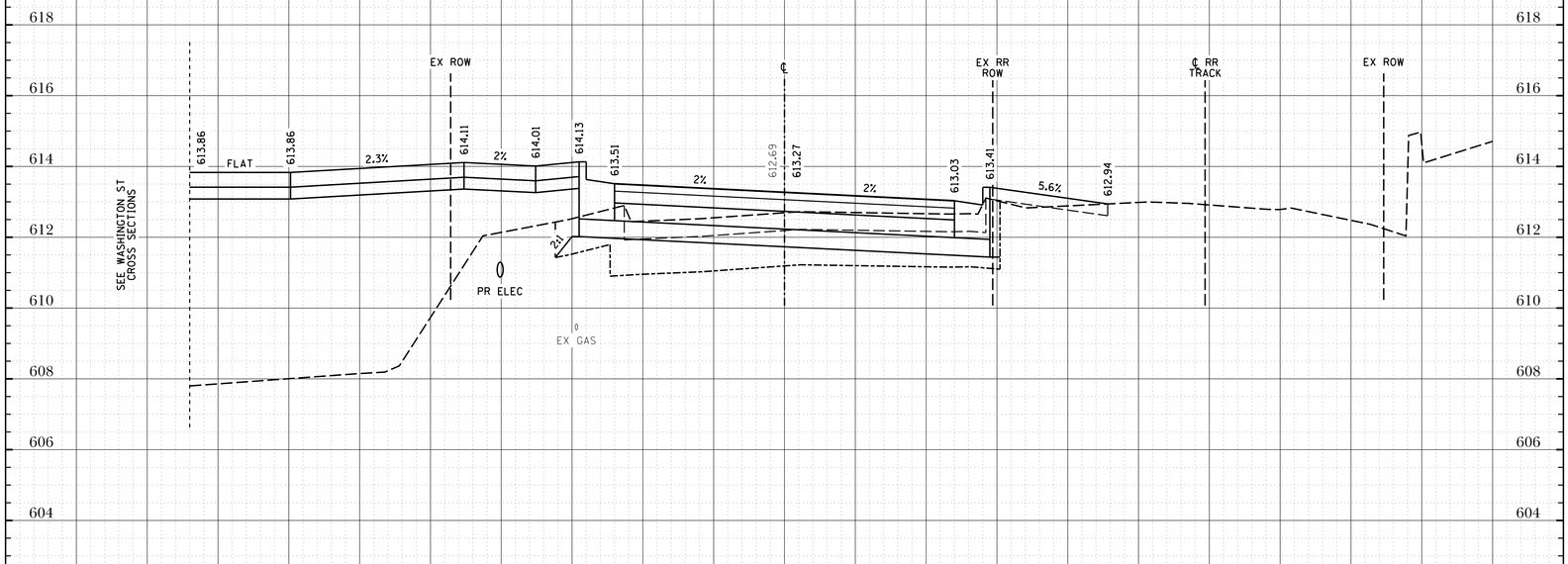

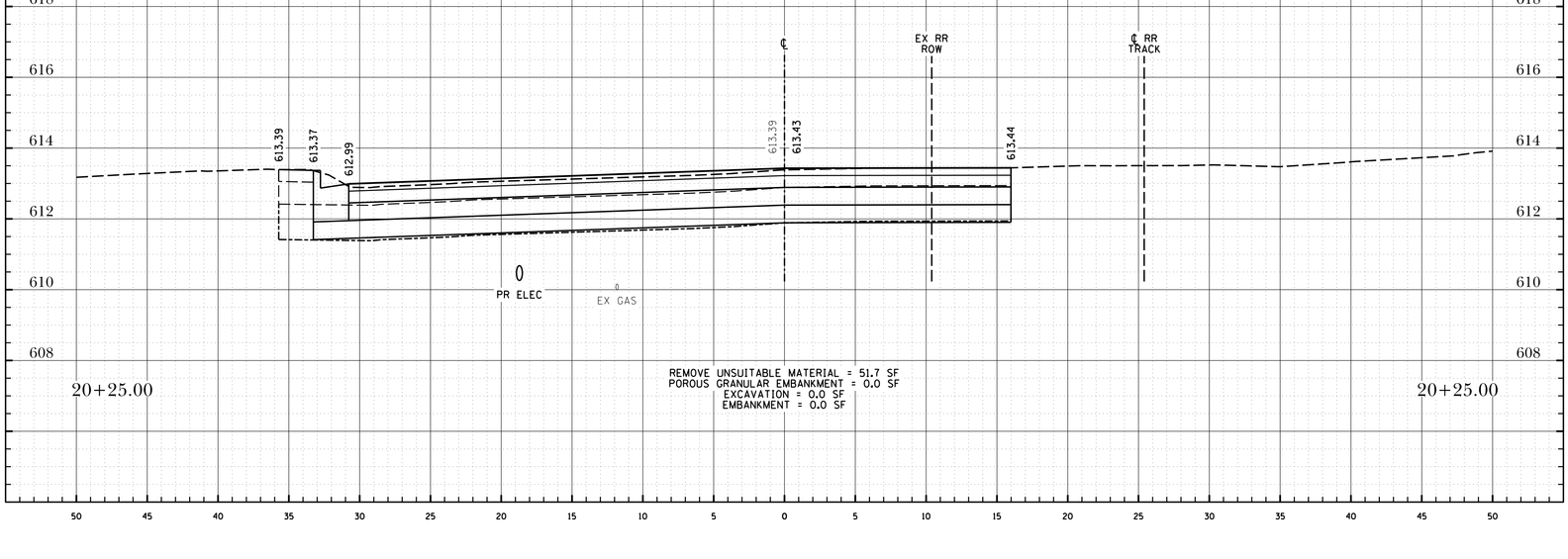

Project No.: SH0002

File Name: XS_ADAMS.dgn

Issue Date: 02/21/2019

Scale: HORZ: 1" = 5' VERT: 1" = 2'

Sheet Number 103

The Reserve at Hudson Crossing - Roadway Improvements

Cross Sections - Adams Street

Oswego, Kendall County, Illinois

TROTTER and ASSOCIATES, INC.
ENGINEERS AND SURVEYORS
40W201 Wasco Road, Suite D
St. Charles, IL 60175
Ph.: 630-587-0470 • Fax: 630-587-0475

PROJECT STAFF	ISSUE	REVISIONS	DATE
PROJECT MANAGER:			
ENGINEER:			
ENGINEER:			
ENGINEER:	5.	ISSUED FOR BIDDING	2/21/19
TECHNICIAN:	4.	PER VILLAGE OF OSWEGO, IDOT, FOX METRO	2/15/19
TECHNICIAN:	3.	REVISIONS PER VILLAGE OF OSWEGO REVIEW	1/11/19
	2.	REVISIONS PER VILLAGE OF OSWEGO REVIEW	12/4/18
	1.	REVISIONS PER VILLAGE OF OSWEGO REVIEW	11/21/18

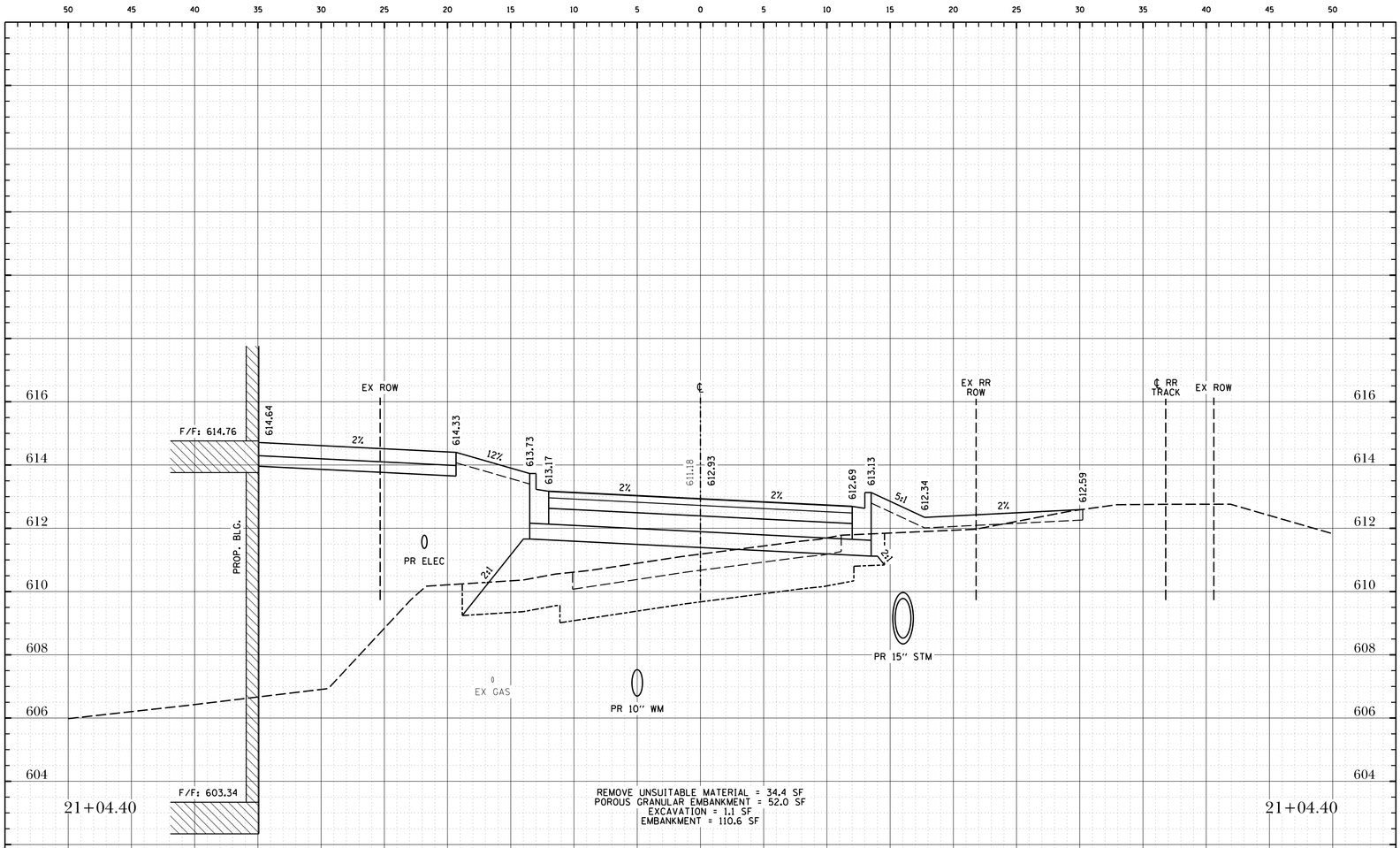

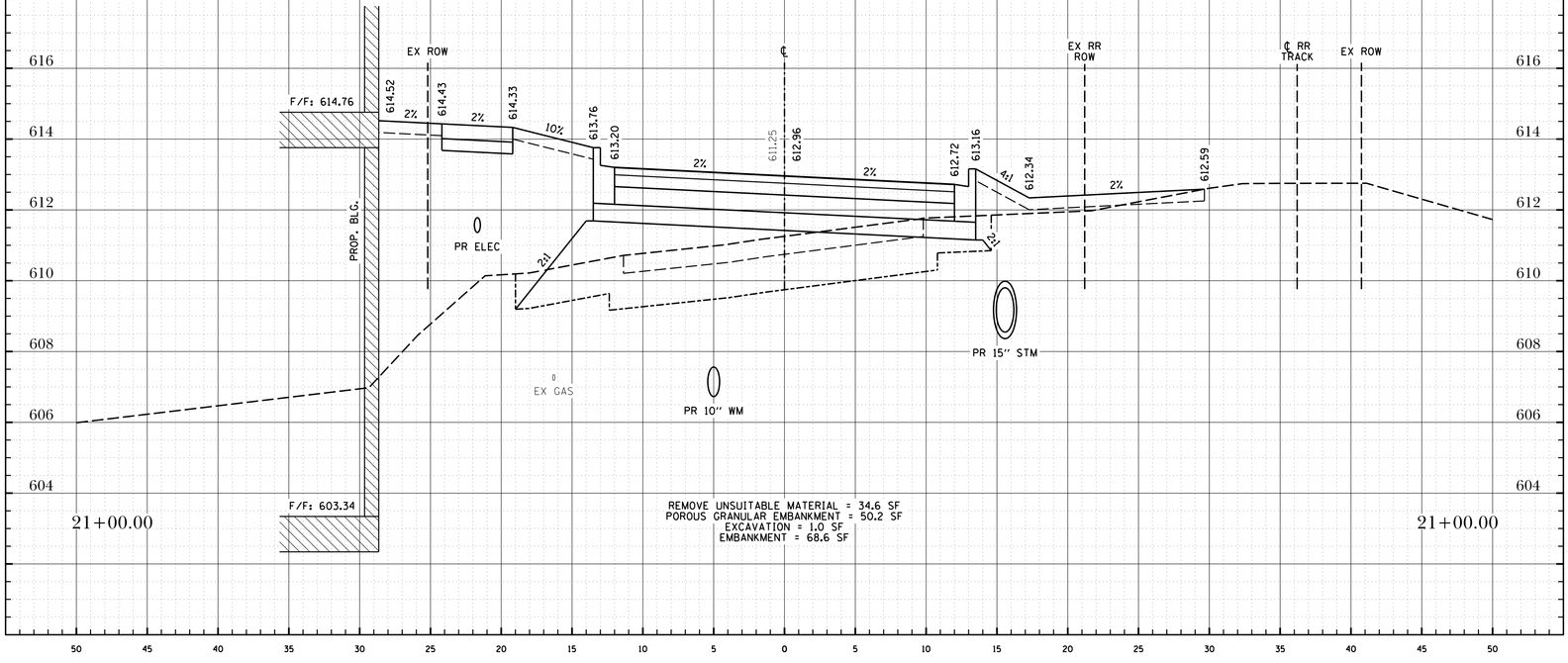

104

Sheet Number

Scale: HORZ: 1" = 5' VERT: 1" = 2'

Issue Date: 10/22/2019

File Name: XS_ADAMS.dgn

Project No.: SH0002

The Reserve at Hudson Crossing - Roadway Improvements

Cross Sections - Adams Street

Oswego, Kendall County, Illinois

TROTTER and ASSOCIATES, INC.
ENGINEERS AND SURVEYORS
40W201 Wasco Road, Suite D
St. Charles, IL 60175
Ph.: 630-587-0470 • Fax: 630-587-0475

PROJECT STAFF	ISSUE	REVISIONS	DATE
PROJECT MANAGER:			
ENGINEER:			
ENGINEER:			
ENGINEER:	5.	ISSUED FOR BIDDING	2/21/19
TECHNICIAN:	4.	PER VILLAGE OF OSWEGO, IDOT, FOX METRO	2/15/19
TECHNICIAN:	3.	REVISIONS PER VILLAGE OF OSWEGO REVIEW	1/11/19
	2.	REVISIONS PER VILLAGE OF OSWEGO REVIEW	12/4/18
	1.	REVISIONS PER VILLAGE OF OSWEGO REVIEW	11/21/18

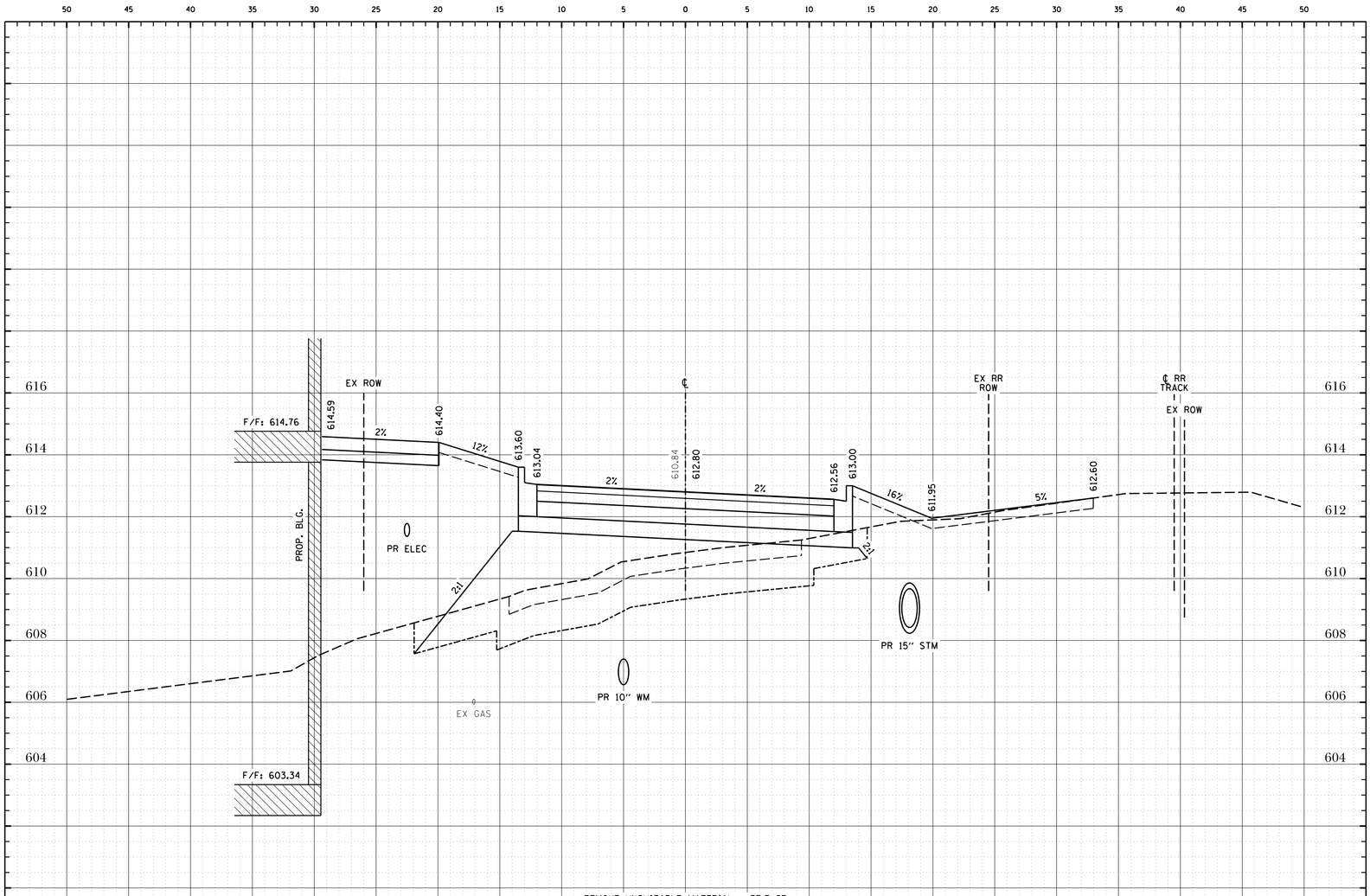

REMOVE UNSUITABLE MATERIAL = 37.7 SF
POROUS GRANULAR EMBANKMENT = 69.9 SF
EXCAVATION = 3.9 SF
EMBANKMENT = 81.5 SF

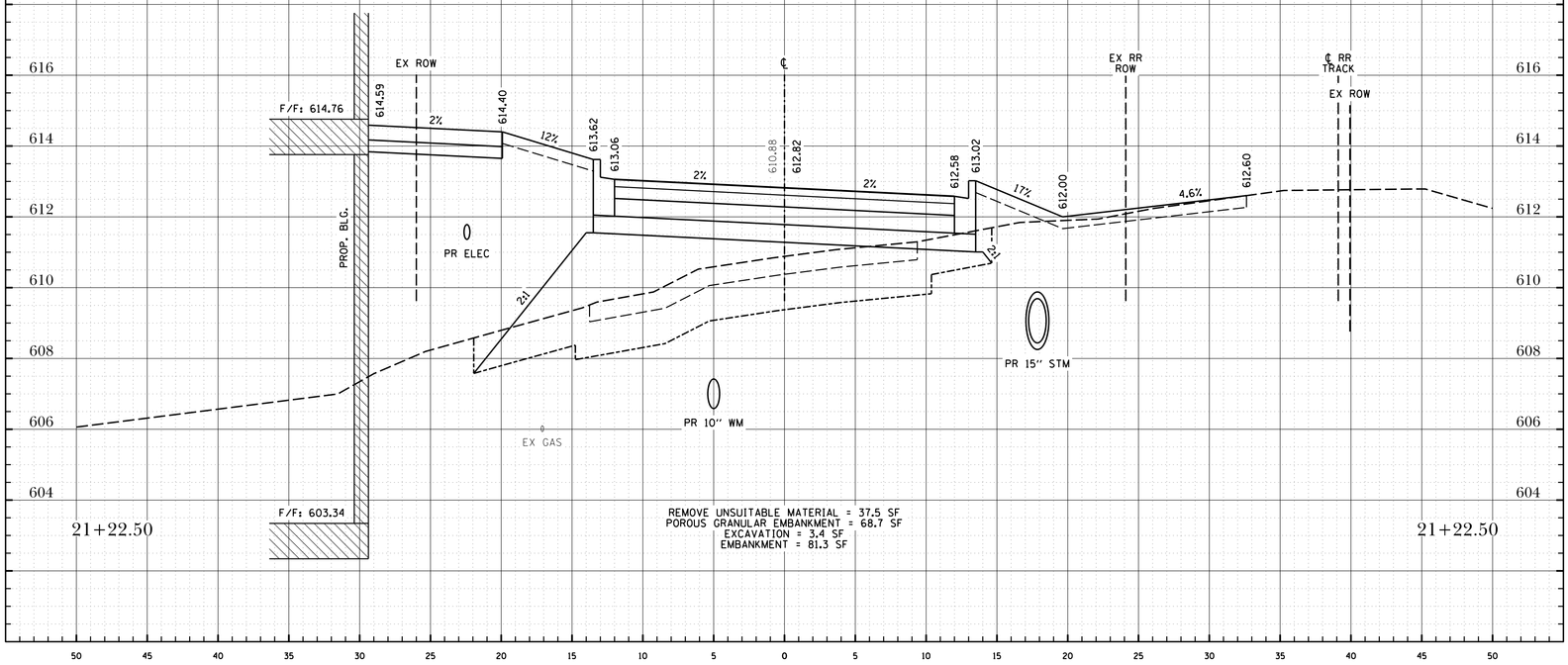

REMOVE UNSUITABLE MATERIAL = 37.5 SF
POROUS GRANULAR EMBANKMENT = 68.7 SF
EXCAVATION = 3.4 SF
EMBANKMENT = 81.3 SF

Project No.: SH0002
File Name: XS_ADAMS.dgn
Issue Date: 02/21/2019
Scale: HORZ: 1" = 5' VERT: 1" = 2'
Sheet Number 105

The Reserve at Hudson Crossing - Roadway Improvements

Cross Sections - Adams Street

Oswego, Kendall County, Illinois

TROTTER and ASSOCIATES, INC.
ENGINEERS AND SURVEYORS
40W201 Wasco Road, Suite D
St. Charles, IL 60175
Ph.: 630-587-0470 • Fax: 630-587-0475

PROJECT STAFF	ISSUE	REVISIONS	DATE
PROJECT MANAGER:			
ENGINEER:			
ENGINEER:			
ENGINEER:	5.	ISSUED FOR BIDDING	2/21/19
TECHNICIAN:	4.	PER VILLAGE OF OSWEGO, IDOT, FOX METRO	2/15/19
TECHNICIAN:	3.	REVISIONS PER VILLAGE OF OSWEGO REVIEW	1/11/19
	2.	REVISIONS PER VILLAGE OF OSWEGO REVIEW	12/4/18
	1.	REVISIONS PER VILLAGE OF OSWEGO REVIEW	11/21/18

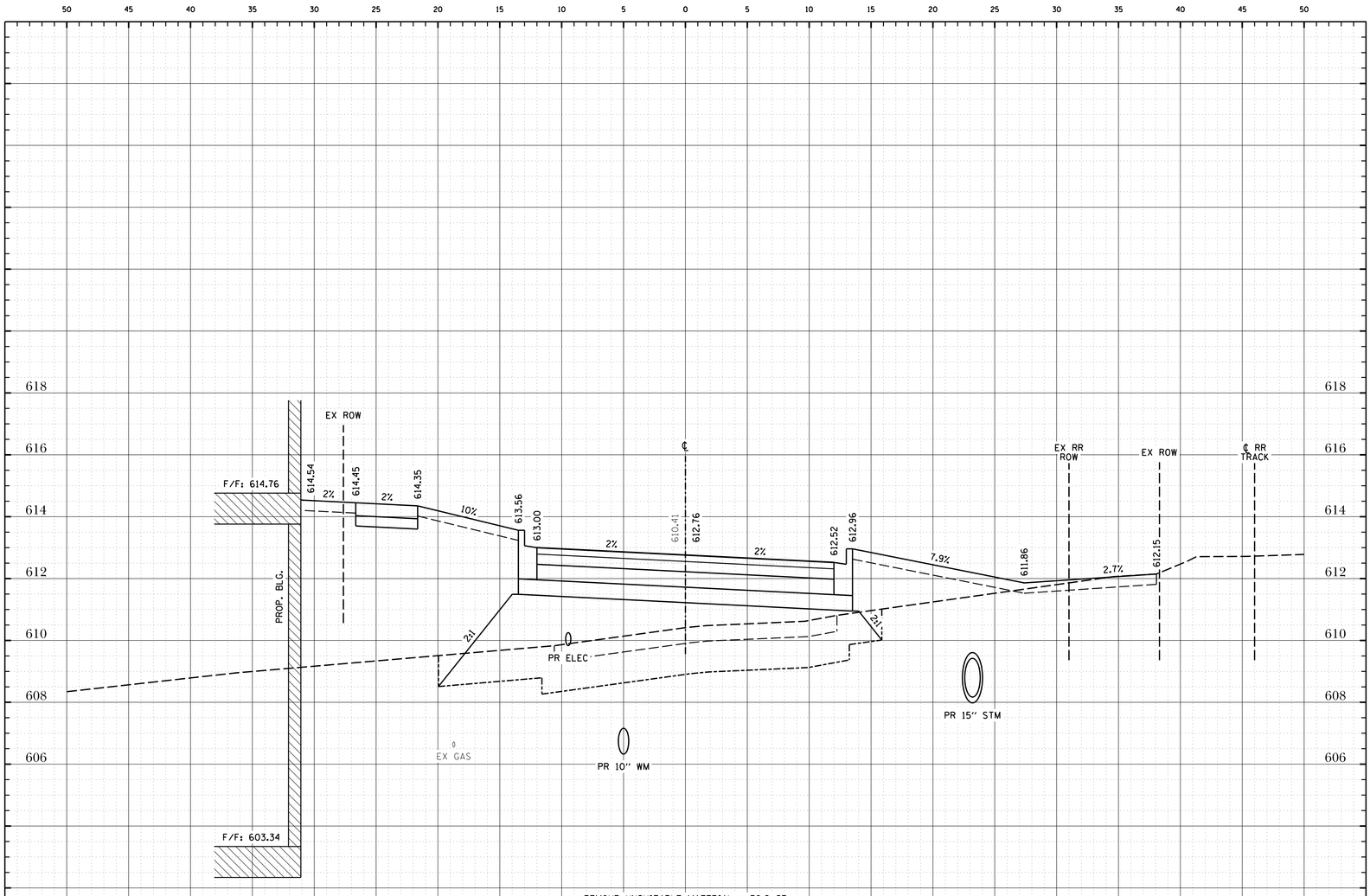

21+75.00

REMOVE UNSUITABLE MATERIAL = 36.9 SF
POROUS GRANULAR EMBANKMENT = 75.0 SF
EXCAVATION = 3.0 SF
EMBANKMENT = 88.1 SF

21+75.00

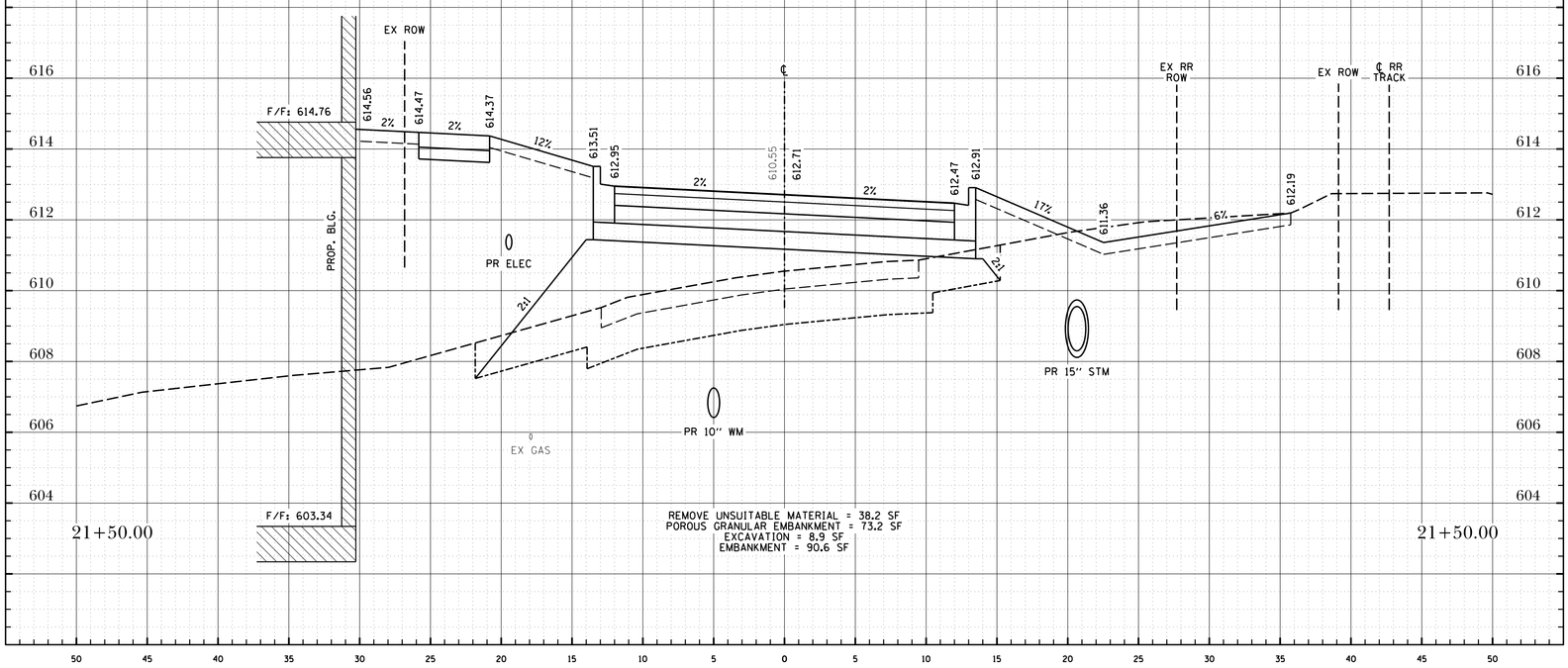

21+50.00

REMOVE UNSUITABLE MATERIAL = 38.2 SF
POROUS GRANULAR EMBANKMENT = 73.2 SF
EXCAVATION = 8.9 SF
EMBANKMENT = 90.6 SF

21+50.00

Project No.: SH0002

File Name: XS_ADAMS.dgn

Issue Date: 10/27/2017

Scale: HORZ: 1" = 5' VERT: 1" = 2'

Sheet Number 106

The Reserve at Hudson Crossing - Roadway Improvements

Cross Sections - Adams Street

Oswego, Kendall County, Illinois

TROTTER and ASSOCIATES, INC.
ENGINEERS AND SURVEYORS
40W201 Wasco Road, Suite D
St. Charles, IL 60175
Ph.: 630-587-0470 • Fax: 630-587-0475

PROJECT STAFF	ISSUE	REVISIONS	DATE
PROJECT MANAGER:			
ENGINEER:			
ENGINEER:			
ENGINEER:	5.	ISSUED FOR BIDDING	2/21/19
TECHNICIAN:	4.	PER VILLAGE OF OSWEGO, IDOT, FOX METRO	2/15/19
TECHNICIAN:	3.	REVISIONS PER VILLAGE OF OSWEGO REVIEW	1/11/19
	2.	REVISIONS PER VILLAGE OF OSWEGO REVIEW	12/4/18
	1.	REVISIONS PER VILLAGE OF OSWEGO REVIEW	11/21/18

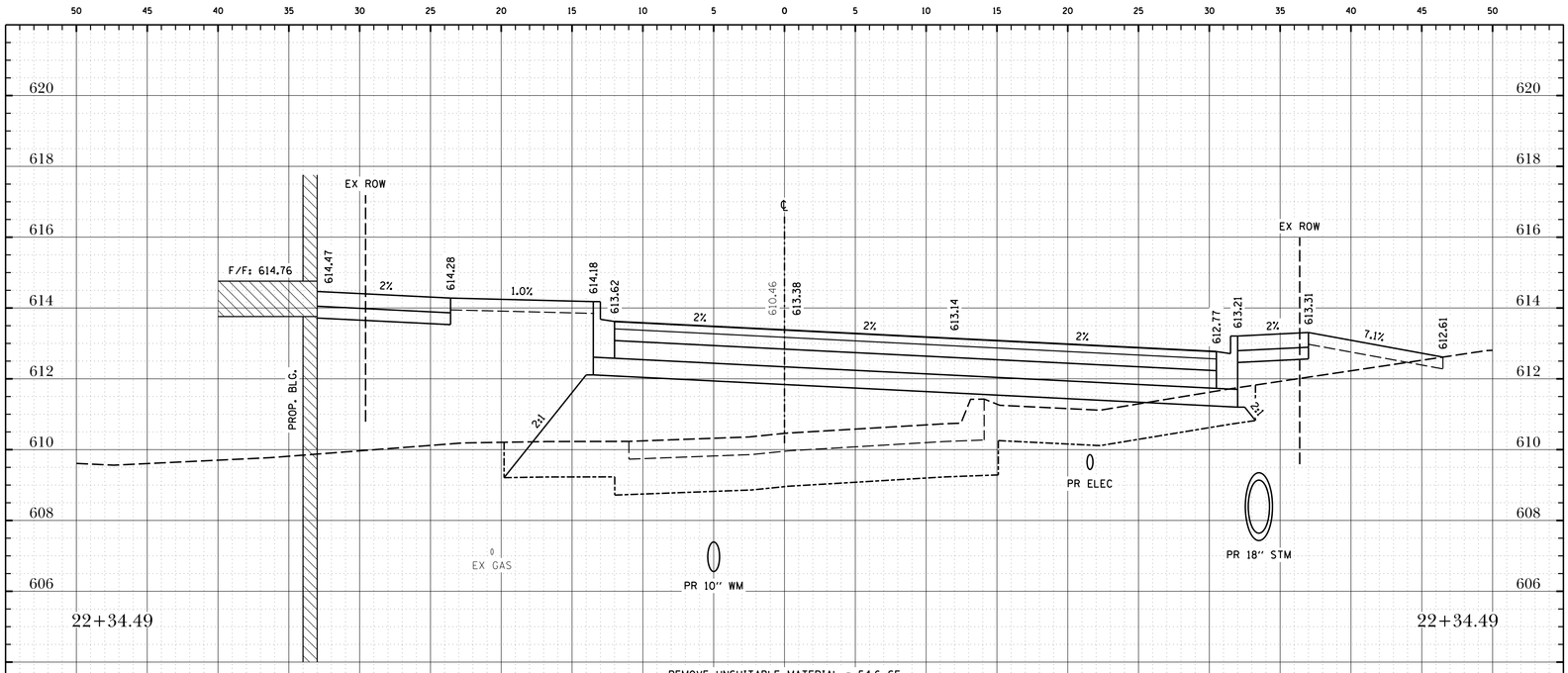

REMOVE UNSUITABLE MATERIAL = 54.6 SF
POROUS GRANULAR EMBANKMENT = 108.4 SF
EXCAVATION = 0.4 SF
EMBANKMENT = 79.0 SF

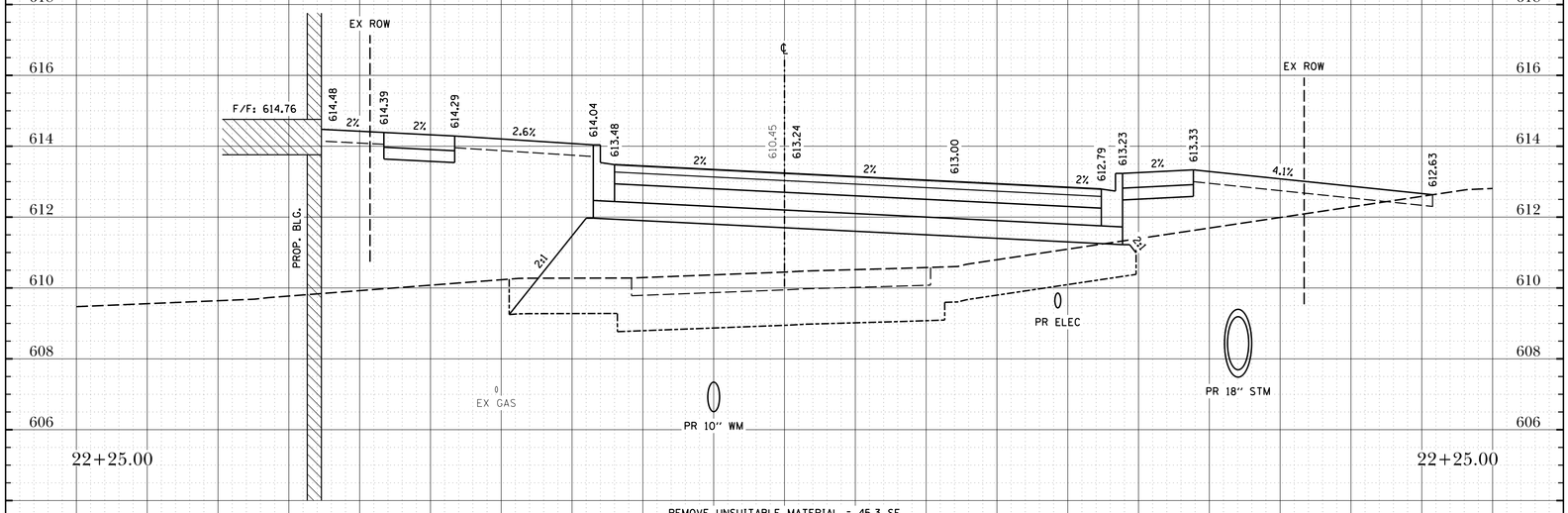

REMOVE UNSUITABLE MATERIAL = 45.3 SF
POROUS GRANULAR EMBANKMENT = 95.5 SF
EXCAVATION = 0.5 SF
EMBANKMENT = 87.8 SF

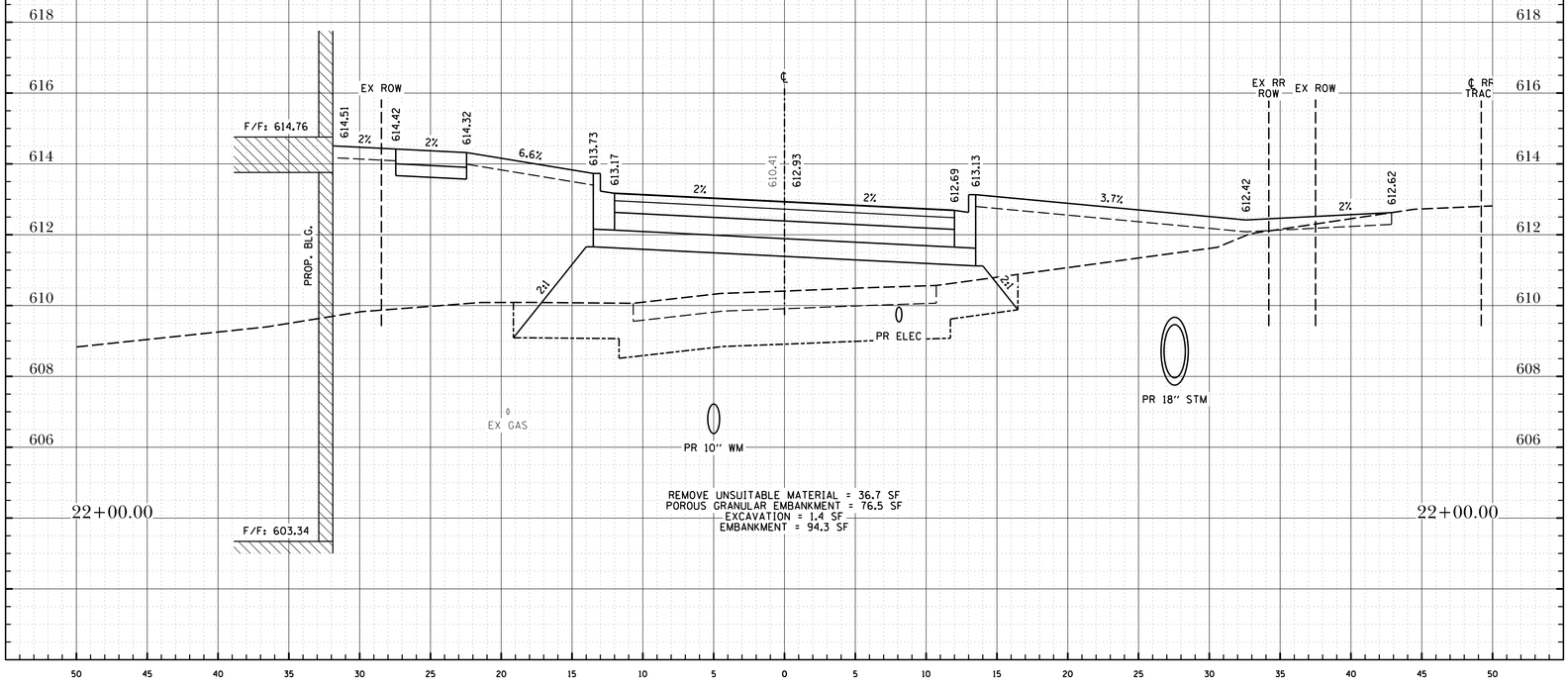

REMOVE UNSUITABLE MATERIAL = 36.7 SF
POROUS GRANULAR EMBANKMENT = 76.5 SF
EXCAVATION = 1.4 SF
EMBANKMENT = 94.3 SF

Project No.: SH0002

File Name: XS_ADAMS.dgn

Issue Date: 02/21/2019

Scale: HORZ: 1" = 5' VERT: 1" = 2'

Sheet Number 107

The Reserve at Hudson Crossing - Roadway Improvements

Cross Sections - Adams Street

Oswego, Kendall County, Illinois

TROTTER and ASSOCIATES, INC.
ENGINEERS AND SURVEYORS
40W201 Wasco Road, Suite D
St. Charles, IL 60175
Ph.: 630-587-0470 • Fax: 630-587-0475

PROJECT STAFF	ISSUE	REVISIONS	DATE
PROJECT MANAGER:			
ENGINEER:			
ENGINEER:			
ENGINEER:	5.	ISSUED FOR BIDDING	2/21/19
TECHNICIAN:	4.	PER VILLAGE OF OSWEGO, IDOT, FOX METRO	2/15/19
TECHNICIAN:	3.	REVISIONS PER VILLAGE OF OSWEGO REVIEW	1/11/19
	2.	REVISIONS PER VILLAGE OF OSWEGO REVIEW	12/4/18
	1.	REVISIONS PER VILLAGE OF OSWEGO REVIEW	11/21/18

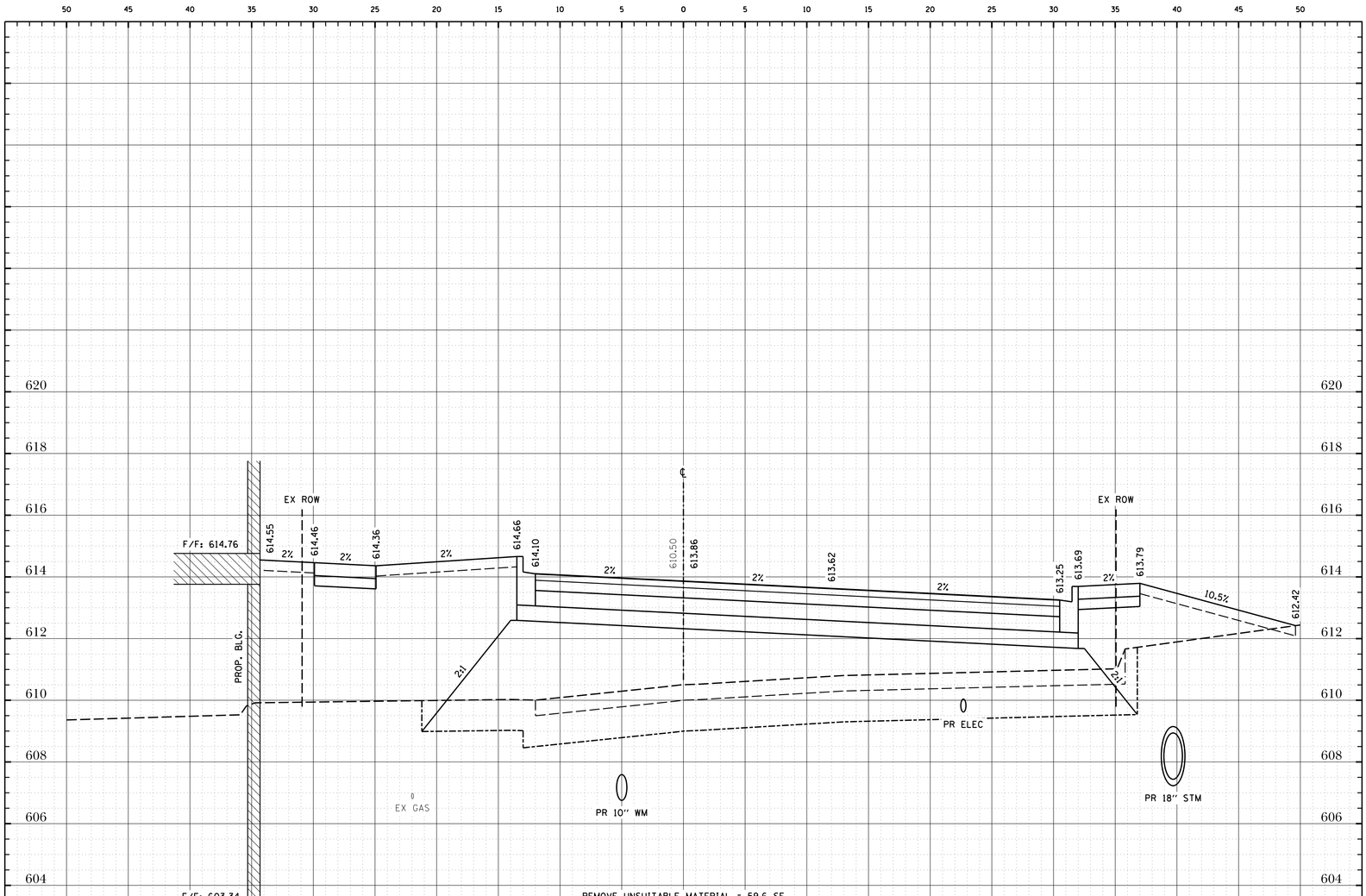

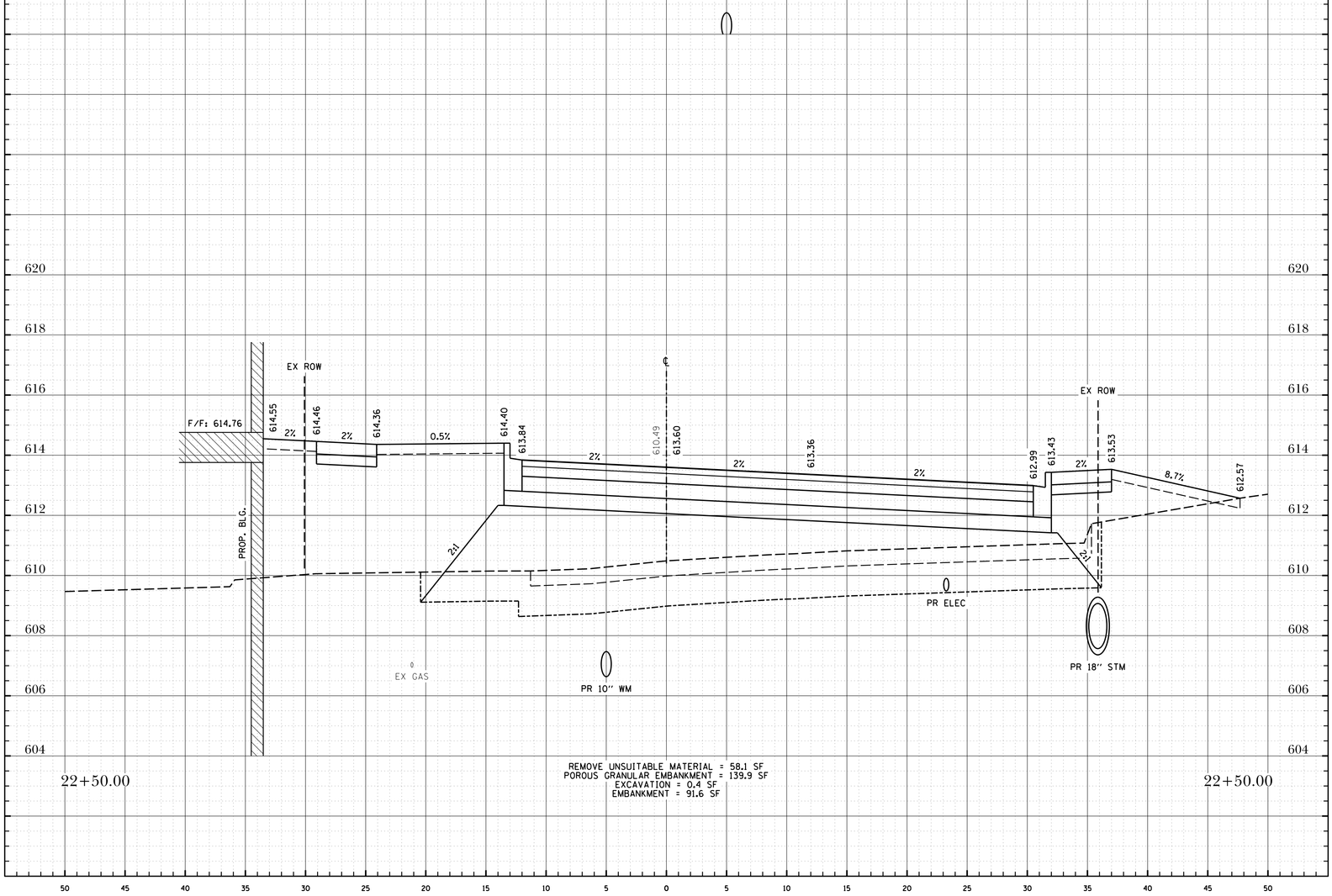

Issue Date: 10/27/2017
Scale: HORZ: 1" = 5' VERT: 1" = 2'
Sheet Number 108

Project No.: SH0002
File Name: XS_ADAMS.dgn

The Reserve at Hudson Crossing - Roadway Improvements

Cross Sections - Adams Street

Oswego, Kendall County, Illinois

TROTTER and ASSOCIATES, INC.
ENGINEERS AND SURVEYORS
40W201 Wasco Road, Suite D
St. Charles, IL 60175
Ph.: 630-587-0470 • Fax: 630-587-0475

PROJECT STAFF	ISSUE	REVISIONS	DATE
PROJECT MANAGER:			
ENGINEER:			
ENGINEER:			
ENGINEER:	5.	ISSUED FOR BIDDING	2/21/19
TECHNICIAN:	4.	PER VILLAGE OF OSWEGO, IDOT, FOX METRO	2/15/19
TECHNICIAN:	3.	REVISIONS PER VILLAGE OF OSWEGO REVIEW	1/11/19
	2.	REVISIONS PER VILLAGE OF OSWEGO REVIEW	12/4/18
	1.	REVISIONS PER VILLAGE OF OSWEGO REVIEW	11/21/18

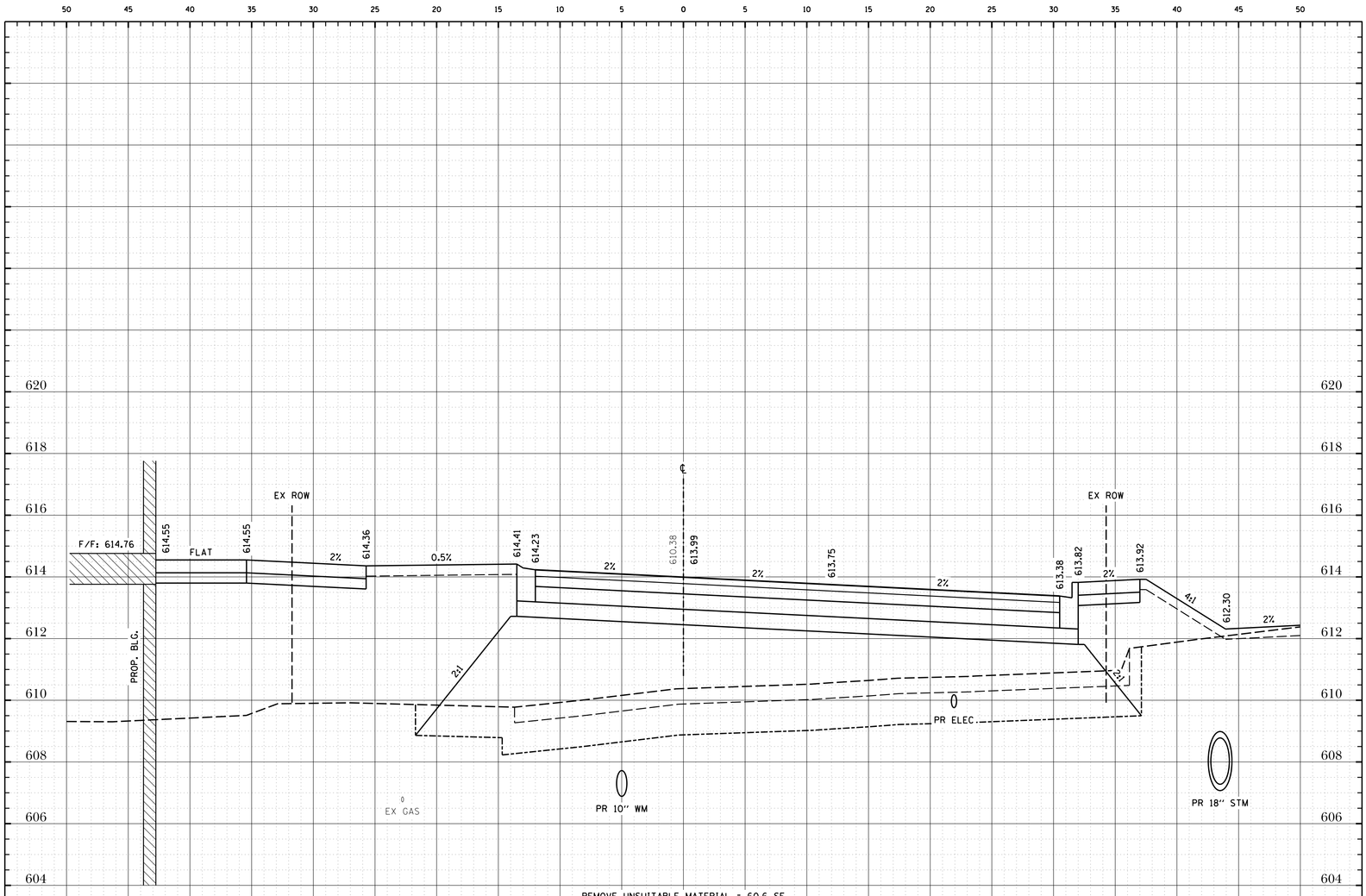

REMOVE UNSUITABLE MATERIAL = 60.6 SF
POROUS GRANULAR EMBANKMENT = 174.0 SF
EXCAVATION = 1.6 SF
EMBANKMENT = 135.1 SF

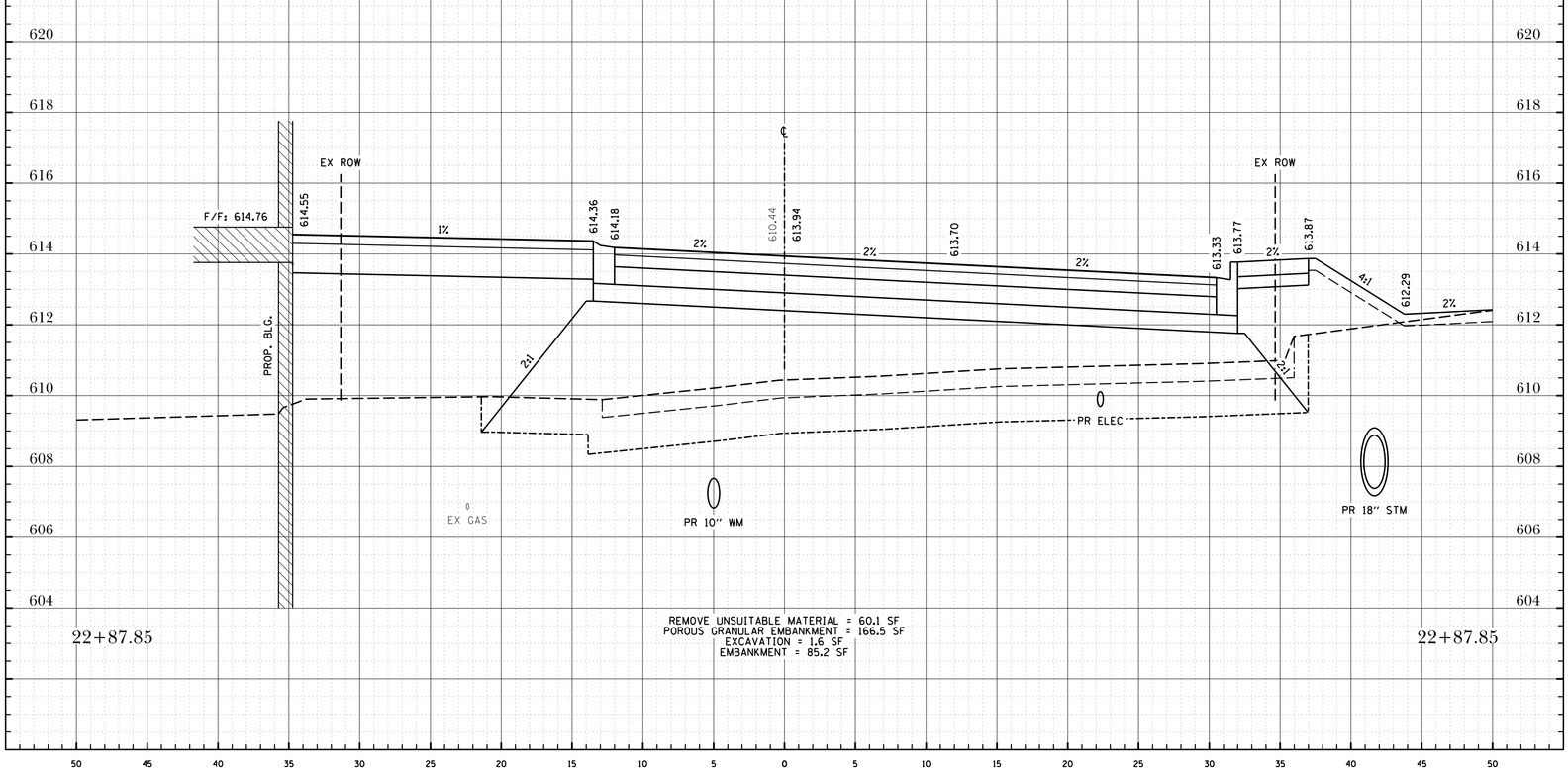

REMOVE UNSUITABLE MATERIAL = 60.1 SF
POROUS GRANULAR EMBANKMENT = 166.5 SF
EXCAVATION = 1.6 SF
EMBANKMENT = 85.2 SF

Project No.: SH0002

File Name: XS_ADAMS.dgn

Issue Date: 02/21/2019
Scale: HORZ: 1" = 5'
VERT: 1" = 2'

Sheet Number 109

The Reserve at Hudson Crossing - Roadway Improvements

Cross Sections - Adams Street

Oswego, Kendall County, Illinois

TROTTER and ASSOCIATES, INC.
ENGINEERS AND SURVEYORS
40W201 Wasco Road, Suite D
St. Charles, IL 60175
Ph.: 630-587-0470 • Fax: 630-587-0475

PROJECT STAFF	ISSUE	REVISIONS	DATE
PROJECT MANAGER:			
ENGINEER:			
ENGINEER:			
ENGINEER:	5.	ISSUED FOR BIDDING	2/21/19
TECHNICIAN:	4.	PER VILLAGE OF OSWEGO, IDOT, FOX METRO	2/15/19
TECHNICIAN:	3.	REVISIONS PER VILLAGE OF OSWEGO REVIEW	1/11/19
	2.	REVISIONS PER VILLAGE OF OSWEGO REVIEW	12/4/18
	1.	REVISIONS PER VILLAGE OF OSWEGO REVIEW	11/21/18

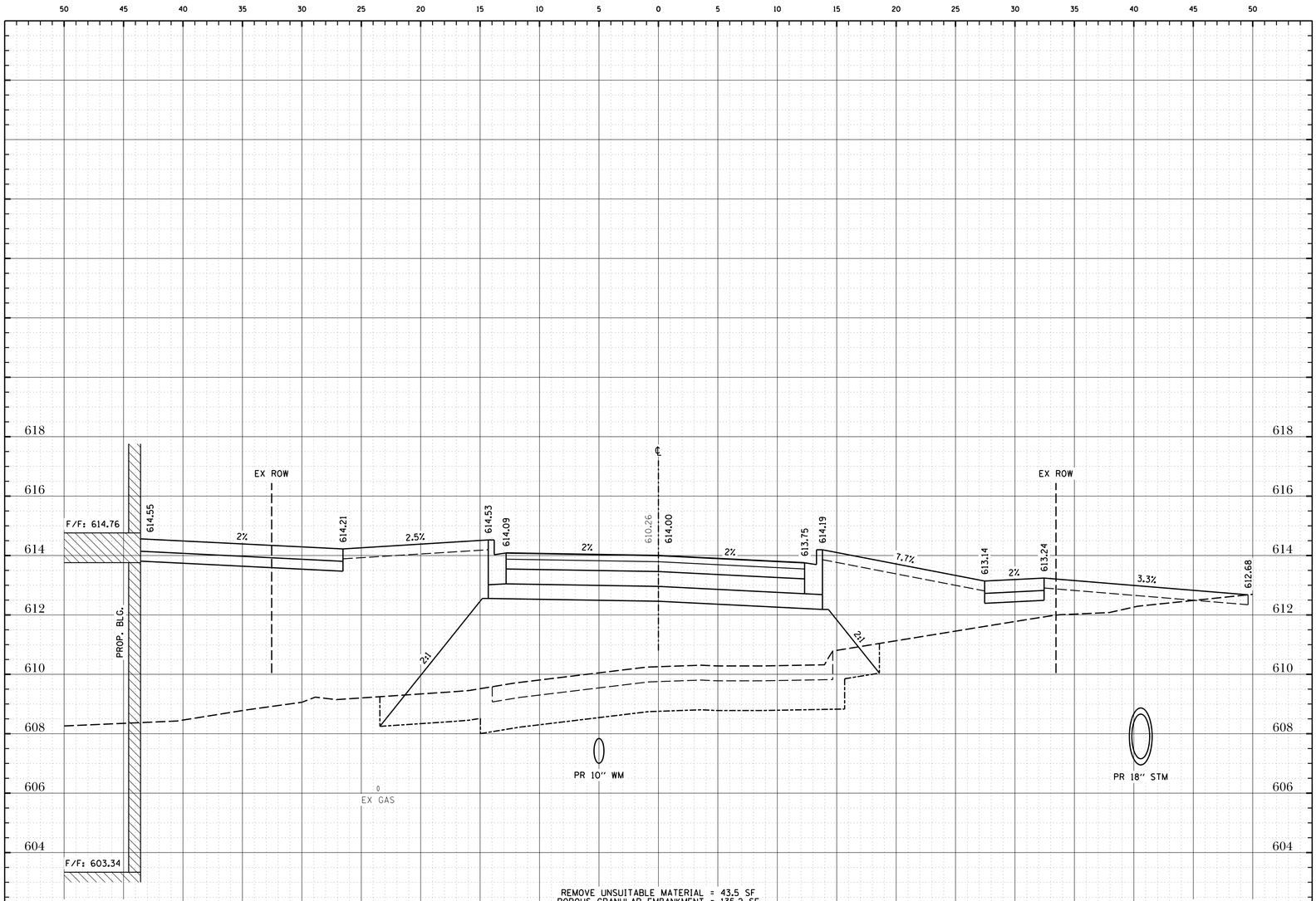

REMOVE UNSUITABLE MATERIAL = 43.5 SF
POROUS GRANULAR EMBANKMENT = 135.2 SF
EXCAVATION = 0.8 SF
EMBANKMENT = 167.6 SF

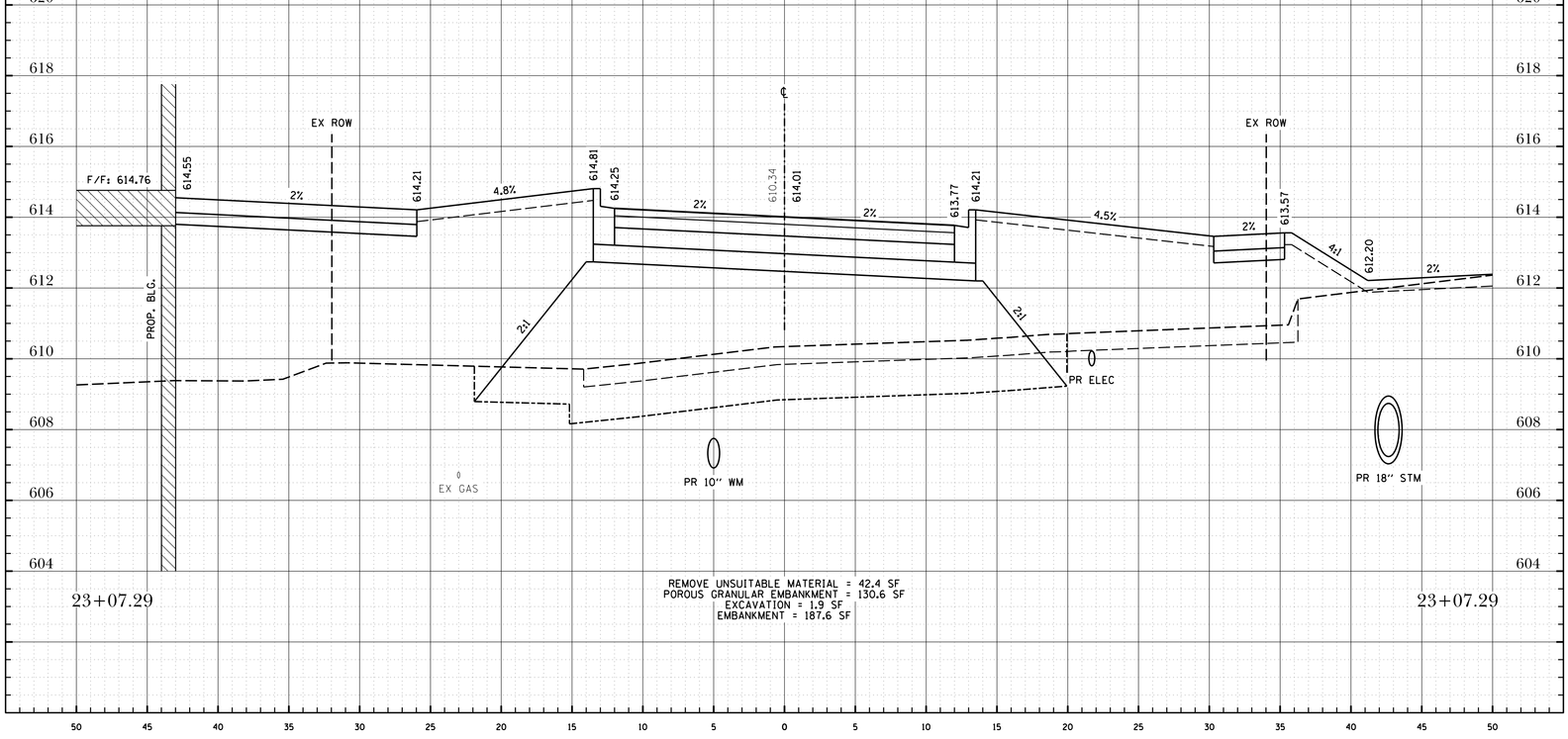

REMOVE UNSUITABLE MATERIAL = 42.4 SF
POROUS GRANULAR EMBANKMENT = 130.6 SF
EXCAVATION = 1.9 SF
EMBANKMENT = 187.6 SF

Project No.: SH0002

File Name: XS_ADAMS.dgn

Issue Date: 02/21/2019
Scale: HORZ: 1" = 5'
VERT: 1" = 2'

Sheet Number
110

The Reserve at Hudson Crossing - Roadway Improvements

Cross Sections - Adams Street

Oswego, Kendall County, Illinois

TROTTER and ASSOCIATES, INC.
ENGINEERS AND SURVEYORS
40W201 Wasco Road, Suite D
St. Charles, IL 60175
Ph.: 630-587-0470 • Fax: 630-587-0475

PROJECT STAFF	ISSUE	REVISIONS	DATE
PROJECT MANAGER:			
ENGINEER:			
ENGINEER:			
ENGINEER:	5.	ISSUED FOR BIDDING	2/21/19
TECHNICIAN:	4.	PER VILLAGE OF OSWEGO, IDOT, FOX METRO	2/15/19
TECHNICIAN:	3.	REVISIONS PER VILLAGE OF OSWEGO REVIEW	1/11/19
	2.	REVISIONS PER VILLAGE OF OSWEGO REVIEW	12/4/18
	1.	REVISIONS PER VILLAGE OF OSWEGO REVIEW	11/21/18

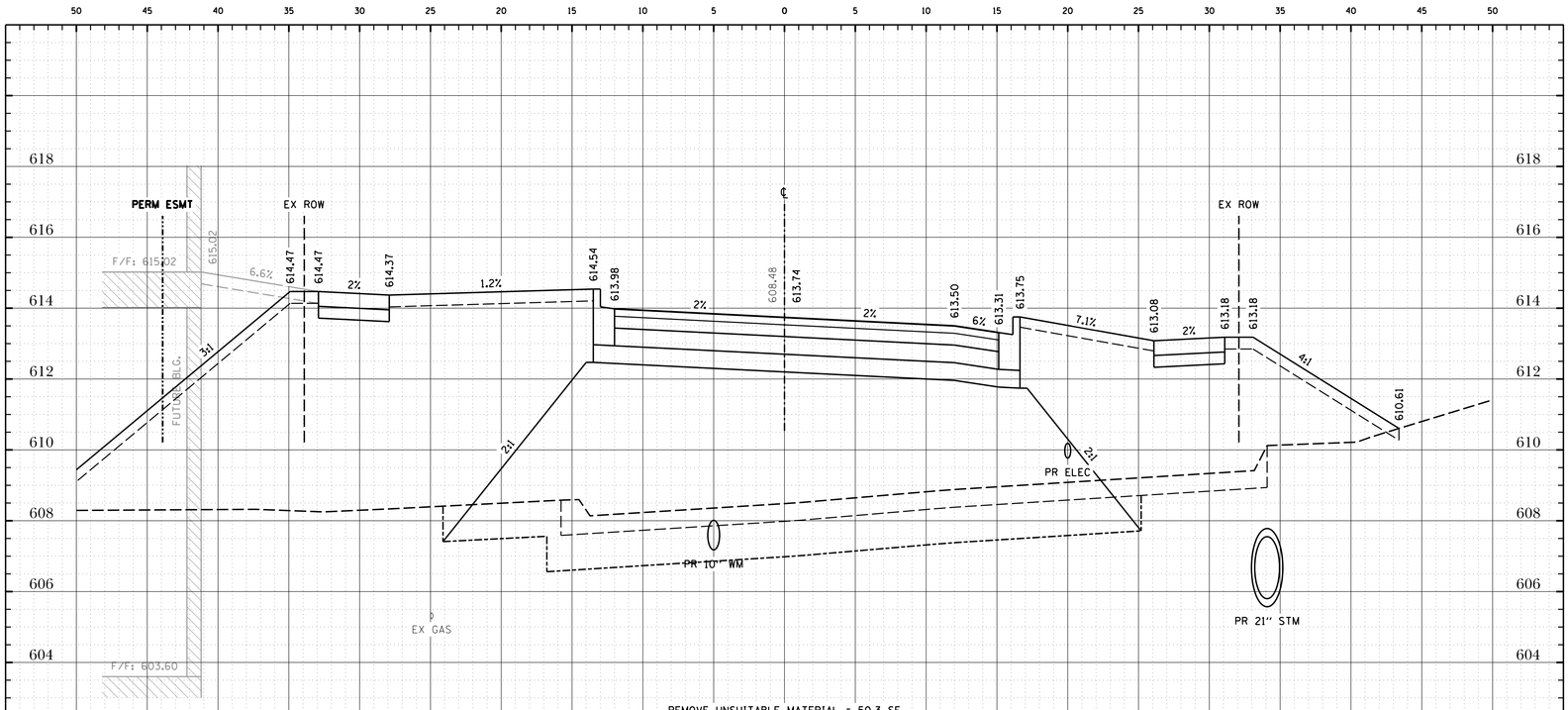

REMOVE UNSUITABLE MATERIAL = 50.3 SF
POROUS GRANULAR EMBANKMENT = 203.1 SF
EXCAVATION = 0.0 SF
EMBANKMENT = 227.4 SF

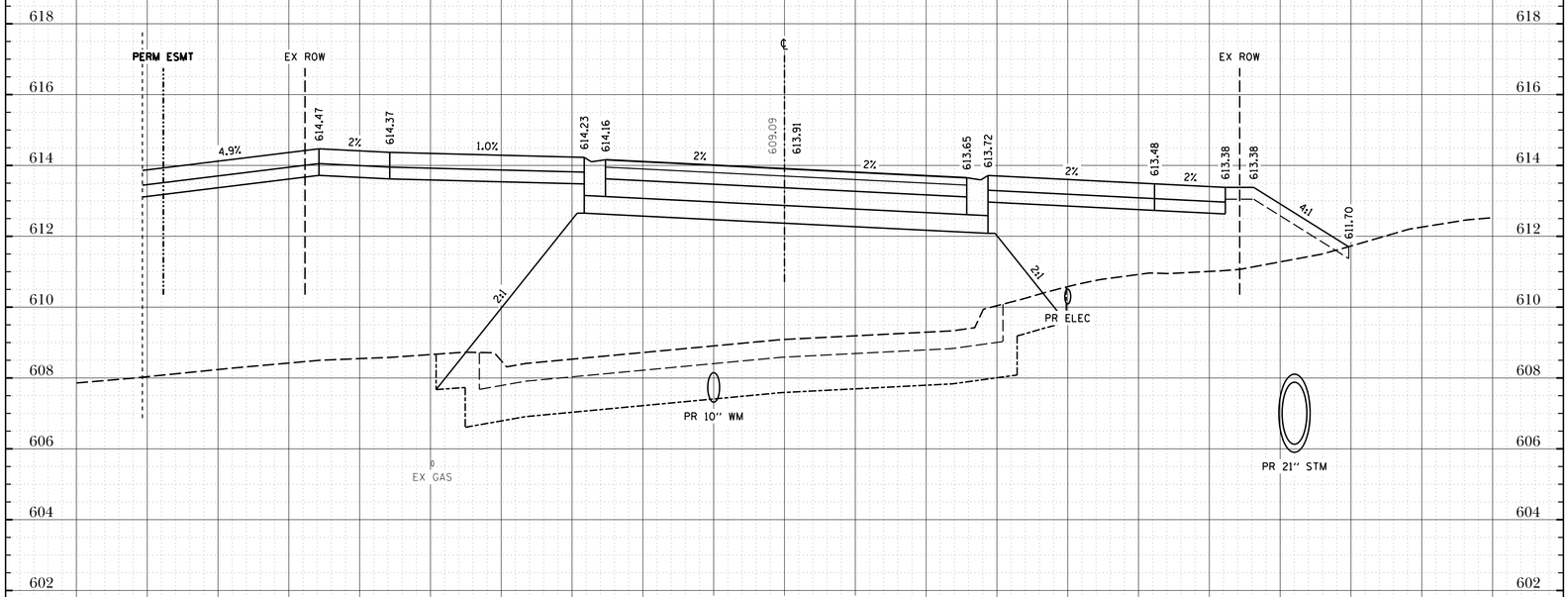

REMOVE UNSUITABLE MATERIAL = 46.7 SF
POROUS GRANULAR EMBANKMENT = 183.1 SF
EXCAVATION = 0.0 SF
EMBANKMENT = 181.5 SF

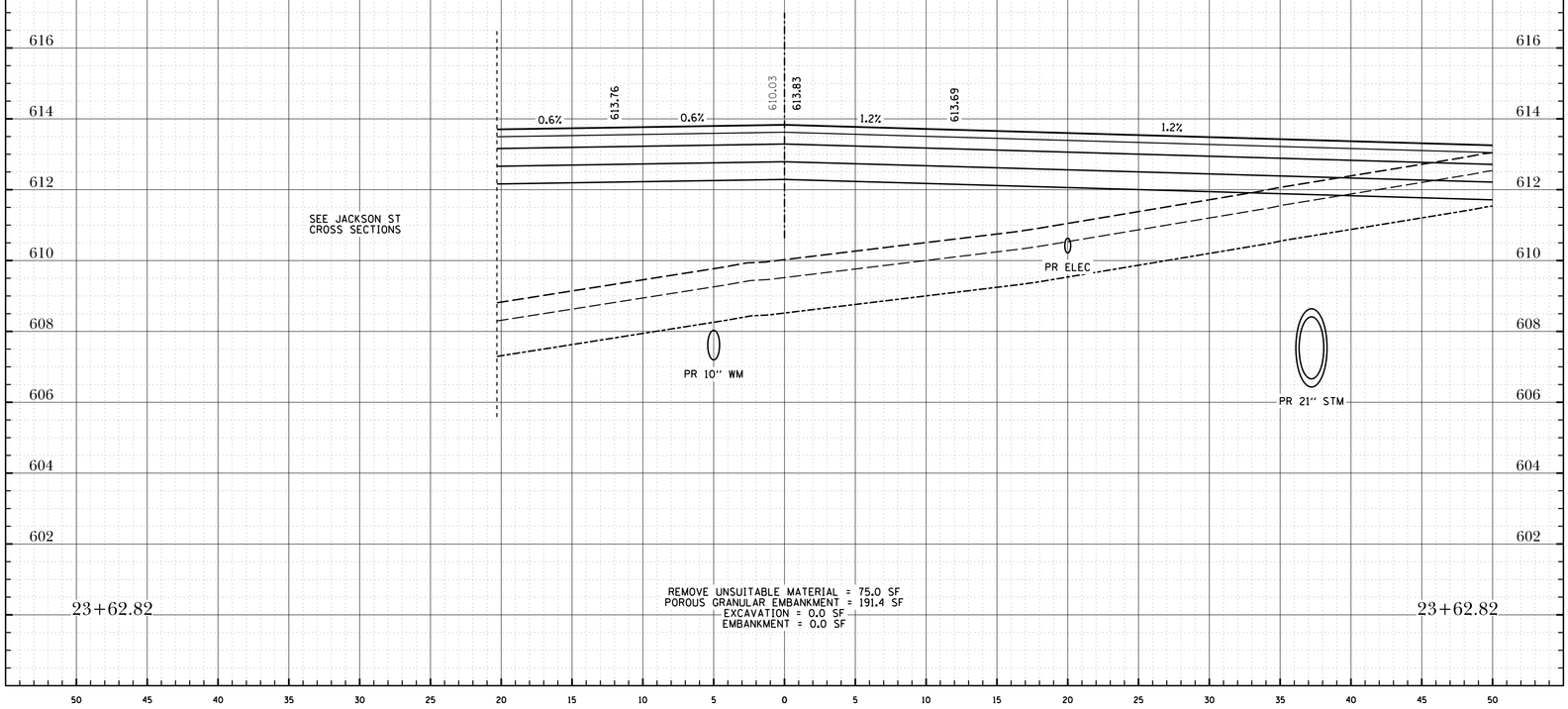

REMOVE UNSUITABLE MATERIAL = 75.0 SF
POROUS GRANULAR EMBANKMENT = 191.4 SF
EXCAVATION = 0.0 SF
EMBANKMENT = 0.0 SF

Project No.: SH0002

File Name: XS_ADAMS.dgn

Issue Date: 02/21/2019

Scale: HORZ: 1" = 5' VERT: 1" = 2'

Sheet Number 111

The Reserve at Hudson Crossing - Roadway Improvements

Cross Sections - Adams Street

Oswego, Kendall County, Illinois

TROTTER and ASSOCIATES, INC.
ENGINEERS AND SURVEYORS
40W201 Wasco Road, Suite D
St. Charles, IL 60175
Ph.: 630-587-0470 • Fax: 630-587-0475

PROJECT STAFF	ISSUE	REVISIONS	DATE
PROJECT MANAGER:			
ENGINEER:			
ENGINEER:			
ENGINEER:	5.	ISSUED FOR BIDDING	2/21/19
TECHNICIAN:	4.	PER VILLAGE OF OSWEGO, IDOT, FOX METRO	2/15/19
TECHNICIAN:	3.	REVISIONS PER VILLAGE OF OSWEGO REVIEW	1/11/19
	2.	REVISIONS PER VILLAGE OF OSWEGO REVIEW	12/4/18
	1.	REVISIONS PER VILLAGE OF OSWEGO REVIEW	11/21/18

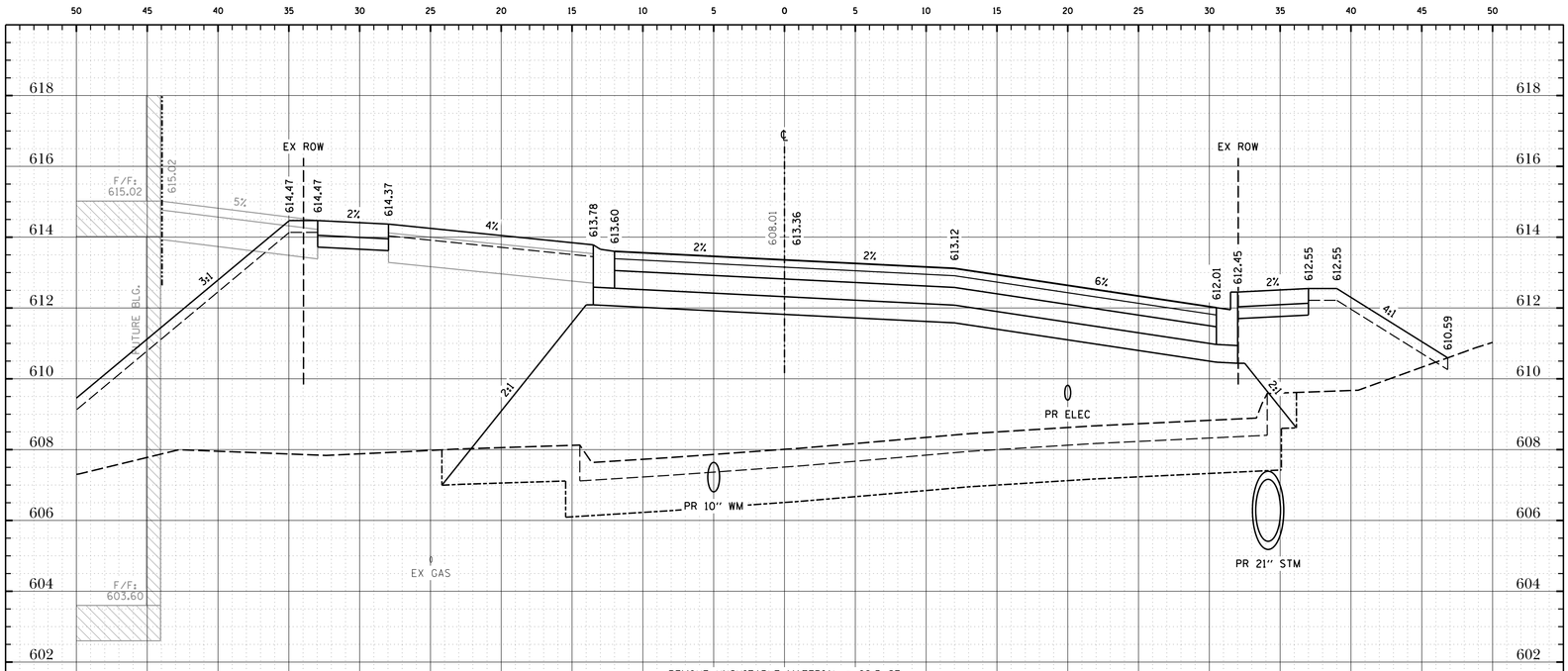

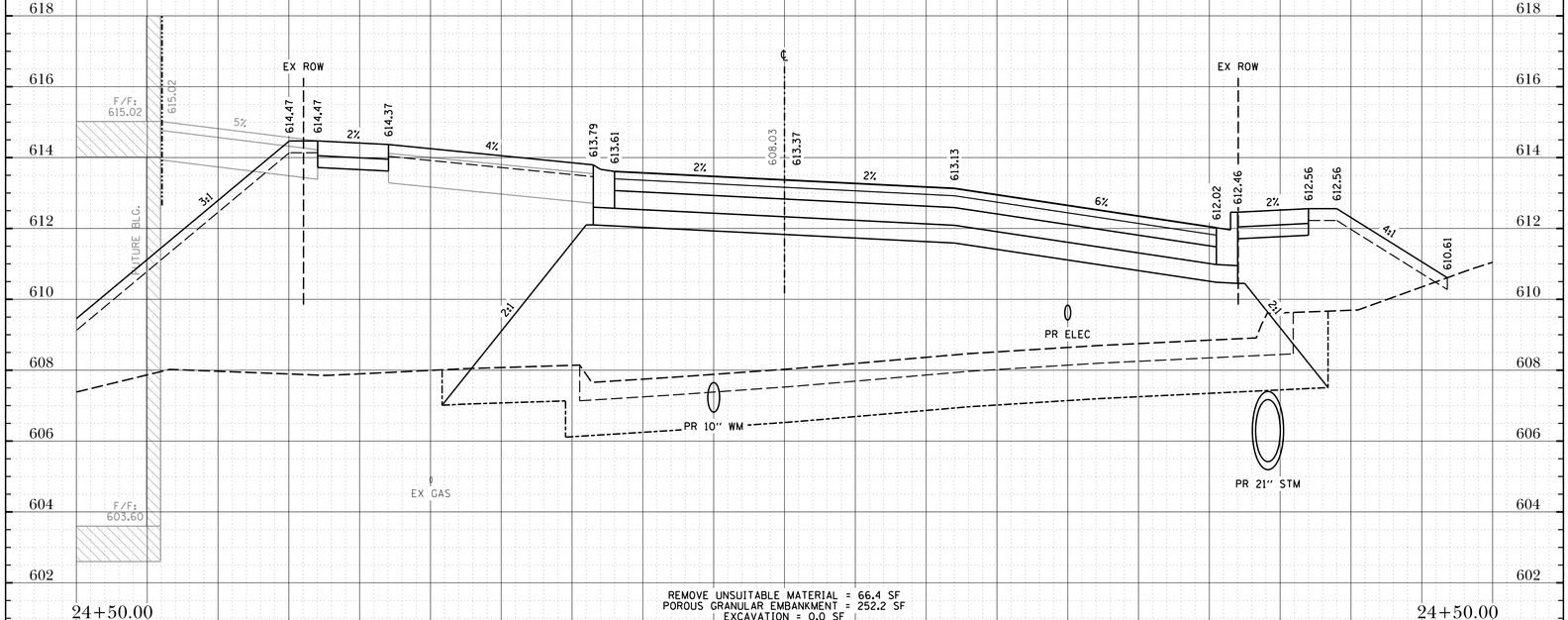

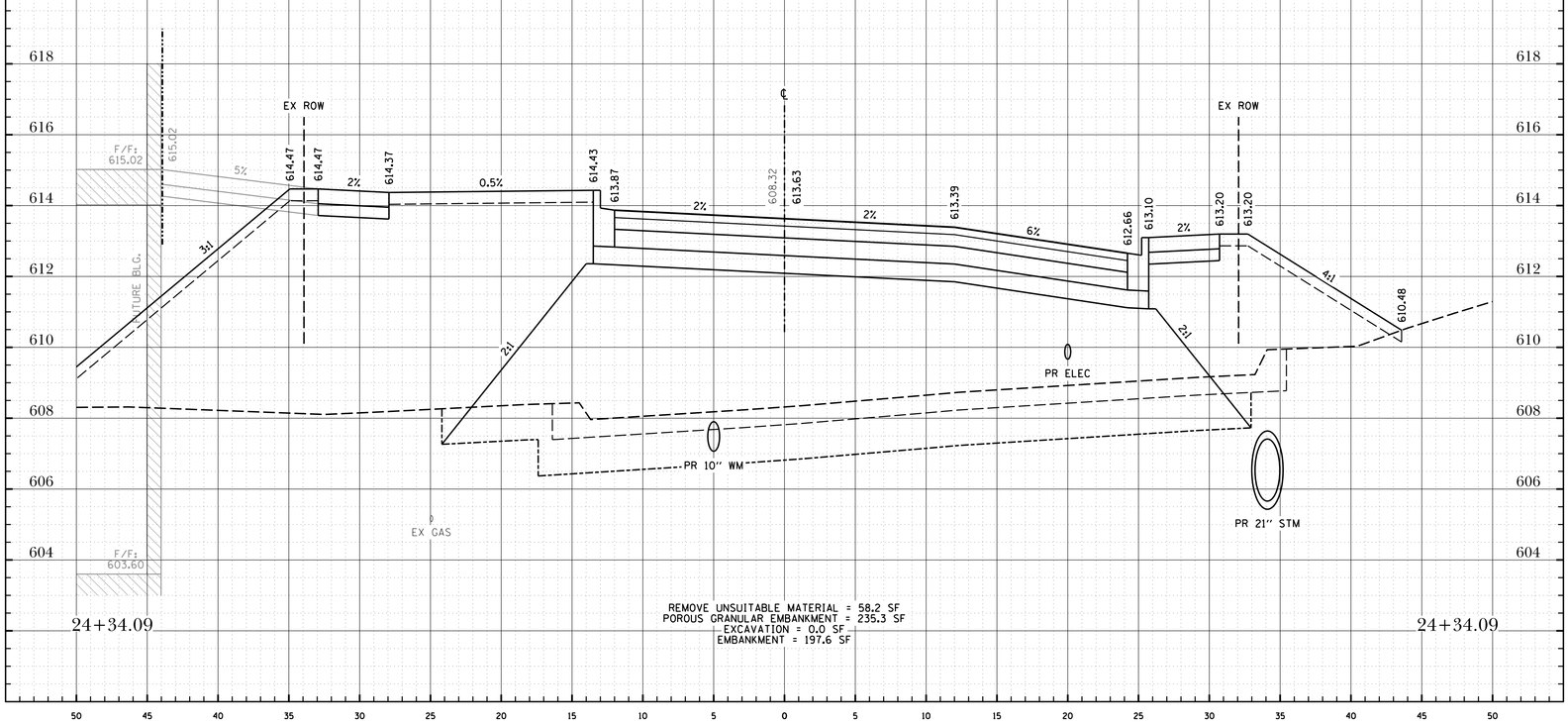

Project No.: SH0002

File Name: XS_ADAMS.dgn

Issue Date: 02/21/2019

Scale: HORZ: 1" = 5' VERT: 1" = 2'

Sheet Number 112

The Reserve at Hudson Crossing - Roadway Improvements

Cross Sections - Adams Street

Oswego, Kendall County, Illinois

TROTTER and ASSOCIATES, INC.
ENGINEERS AND SURVEYORS
40W201 Wasco Road, Suite D
St. Charles, IL 60175
Ph.: 630-587-0470 • Fax: 630-587-0475

PROJECT STAFF	ISSUE	REVISIONS	DATE
PROJECT MANAGER:			
ENGINEER:			
ENGINEER:			
ENGINEER:	5.	ISSUED FOR BIDDING	2/21/19
TECHNICIAN:	4.	PER VILLAGE OF OSWEGO, IDOT, FOX METRO	2/15/19
TECHNICIAN:	3.	REVISIONS PER VILLAGE OF OSWEGO REVIEW	1/11/19
	2.	REVISIONS PER VILLAGE OF OSWEGO REVIEW	12/4/18
	1.	REVISIONS PER VILLAGE OF OSWEGO REVIEW	11/21/18

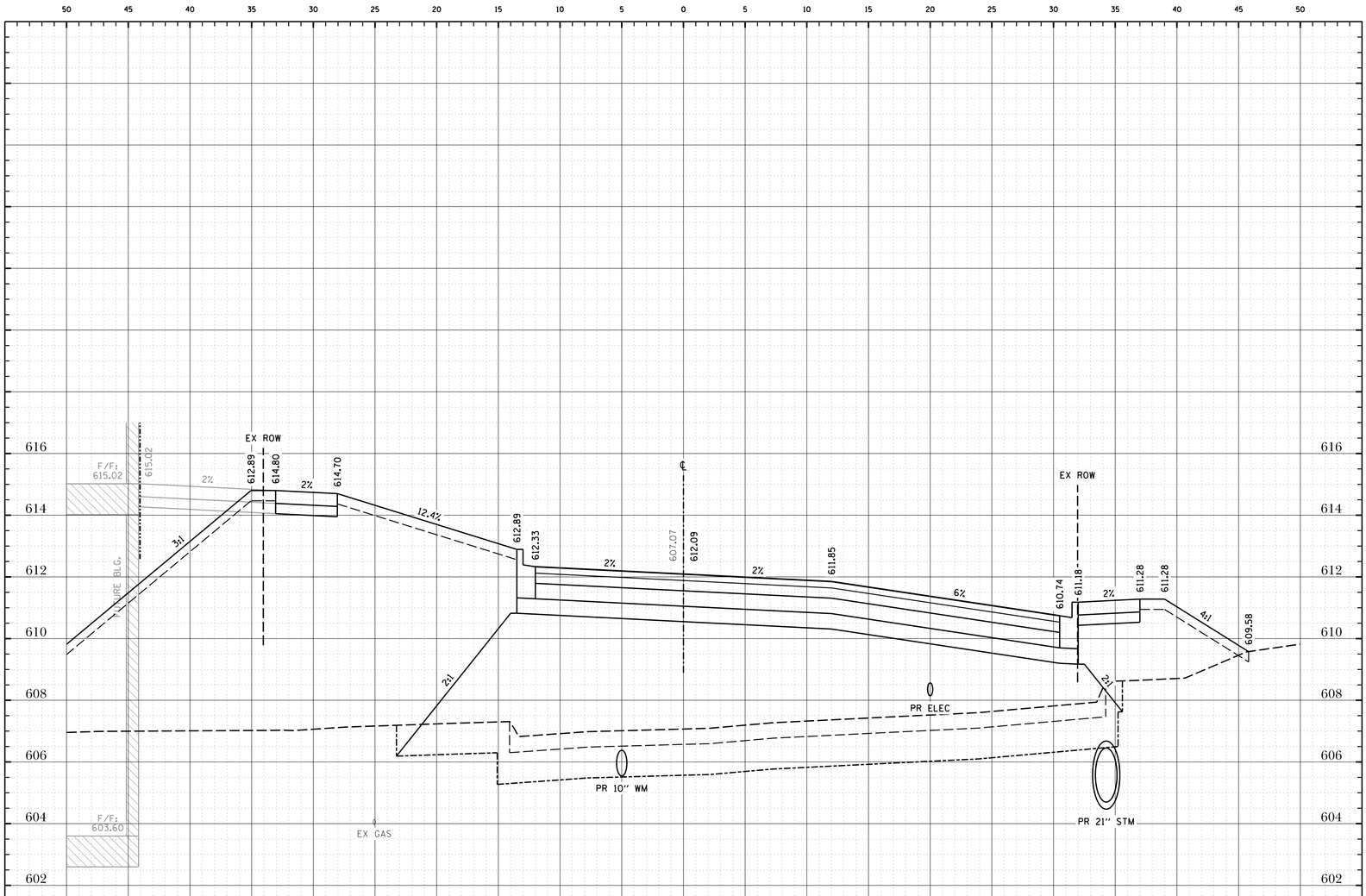

REMOVE UNSUITABLE MATERIAL = 61.0 SF
POROUS GRANULAR EMBANKMENT = 231.1 SF
EXCAVATION = 0.0 SF
EMBANKMENT = 234.5 SF

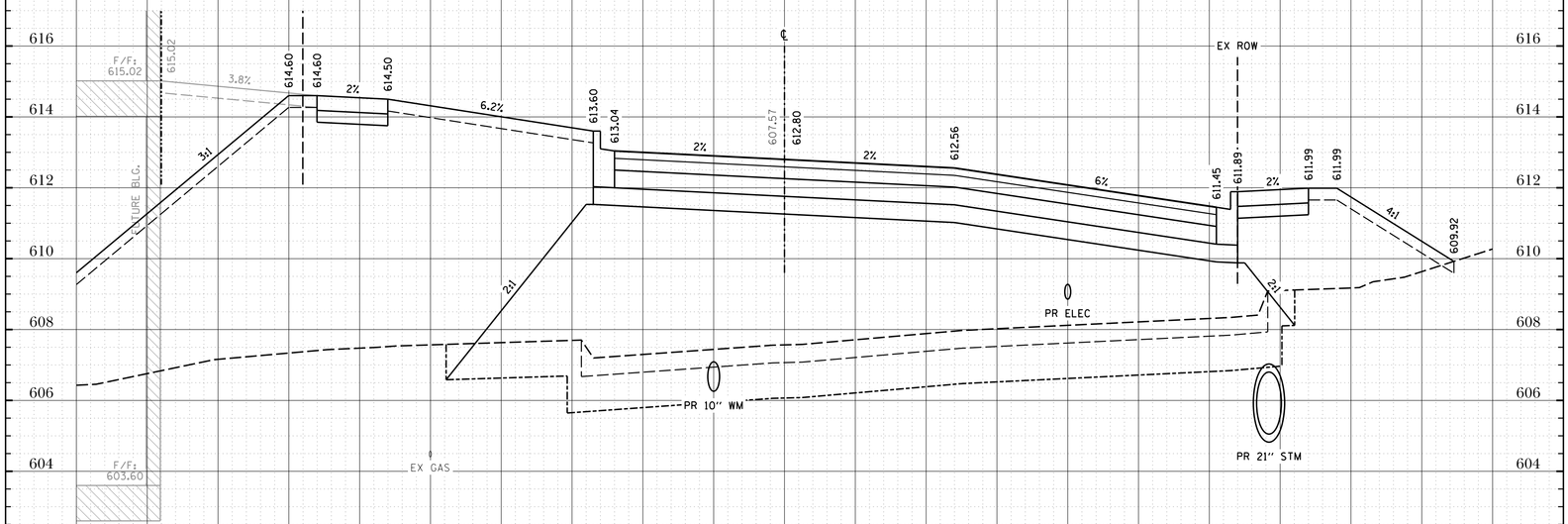

REMOVE UNSUITABLE MATERIAL = 62.1 SF
POROUS GRANULAR EMBANKMENT = 244.2 SF
EXCAVATION = 0.0 SF
EMBANKMENT = 229.1 SF

Sheet Number 113

Issue Date: 10/22/2019
Scale: HORZ: 1" = 5' VERT: 1" = 2'

File Name: XS_ADAMS.dgn

Project No.: SH0002

The Reserve at Hudson Crossing - Roadway Improvements

Cross Sections - Adams Street

Oswego, Kendall County, Illinois

TROTTER and ASSOCIATES, INC.
ENGINEERS AND SURVEYORS
40W201 Wasco Road, Suite D
St. Charles, IL 60175
Ph.: 630-587-0470 • Fax: 630-587-0475

PROJECT STAFF	ISSUE	REVISIONS	DATE
PROJECT MANAGER:			
ENGINEER:			
ENGINEER:			
ENGINEER:	5.	ISSUED FOR BIDDING	2/21/19
TECHNICIAN:	4.	PER VILLAGE OF OSWEGO, IDOT, FOX METRO	2/15/19
TECHNICIAN:	3.	REVISIONS PER VILLAGE OF OSWEGO REVIEW	1/11/19
	2.	REVISIONS PER VILLAGE OF OSWEGO REVIEW	12/4/18
	1.	REVISIONS PER VILLAGE OF OSWEGO REVIEW	11/21/18

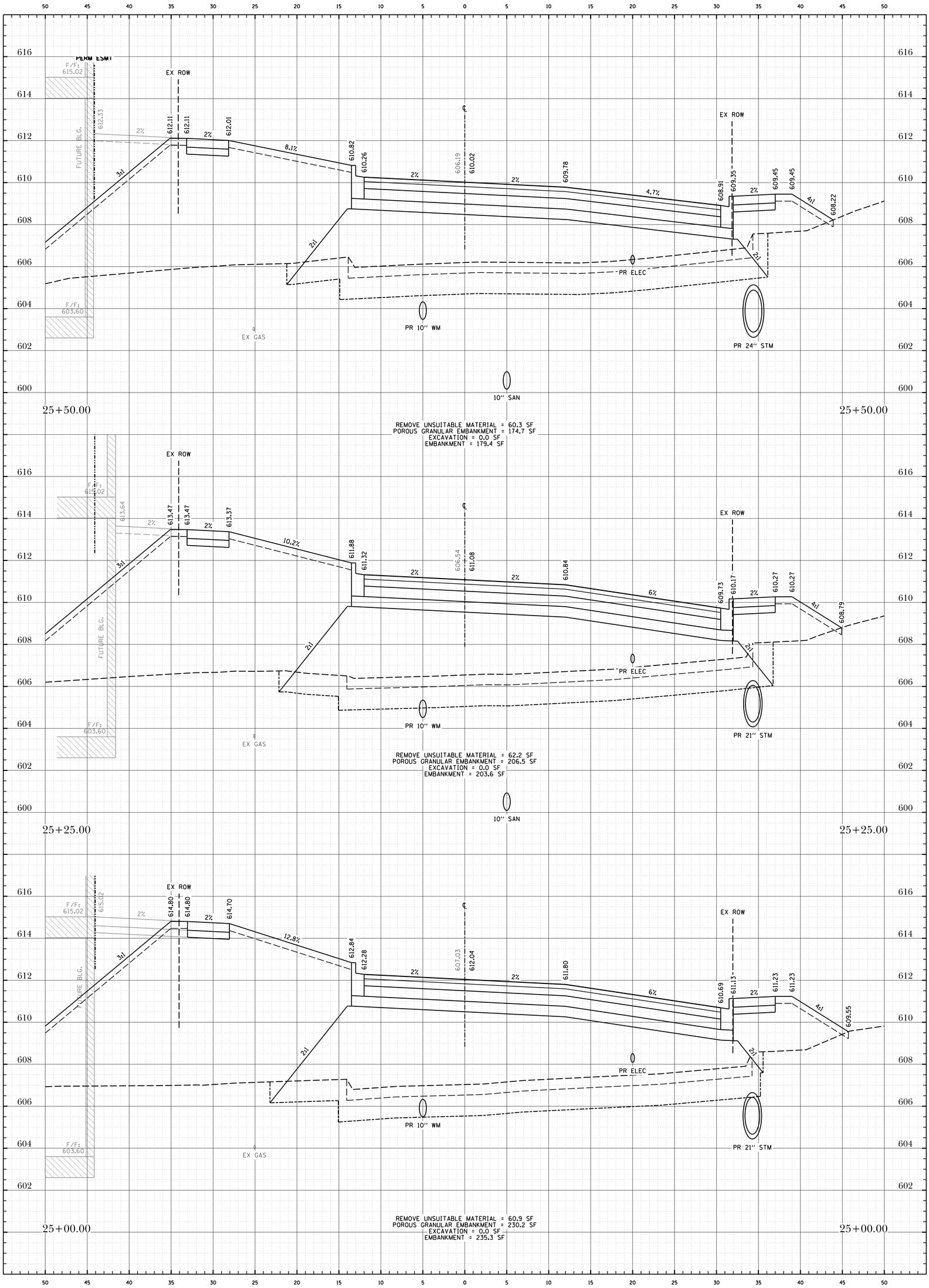

The Reserve at Hudson Crossing - Roadway Improvements

Cross Sections - Adams Street

Oswego, Kendall County, Illinois

Project No.: SH0002

File Name: XS_ADAMS.dgn

Issue Date: 02/21/2019

Scale: HORZ: 1" = 5' VERT: 1" = 2'

Sheet Number 114

TROTTER and ASSOCIATES, INC.
ENGINEERS AND SURVEYORS
40W201 Wasco Road, Suite D
St. Charles, IL 60175
Ph.: 630-587-0470 • Fax: 630-587-0475

PROJECT STAFF	ISSUE	REVISIONS	DATE
PROJECT MANAGER:			
ENGINEER:			
ENGINEER:			
ENGINEER:	5.	ISSUED FOR BIDDING	2/21/19
TECHNICIAN:	4.	PER VILLAGE OF OSWEGO, IDOT, FOX METRO	2/15/19
TECHNICIAN:	3.	REVISIONS PER VILLAGE OF OSWEGO REVIEW	1/11/19
	2.	REVISIONS PER VILLAGE OF OSWEGO REVIEW	12/4/18
	1.	REVISIONS PER VILLAGE OF OSWEGO REVIEW	11/21/18

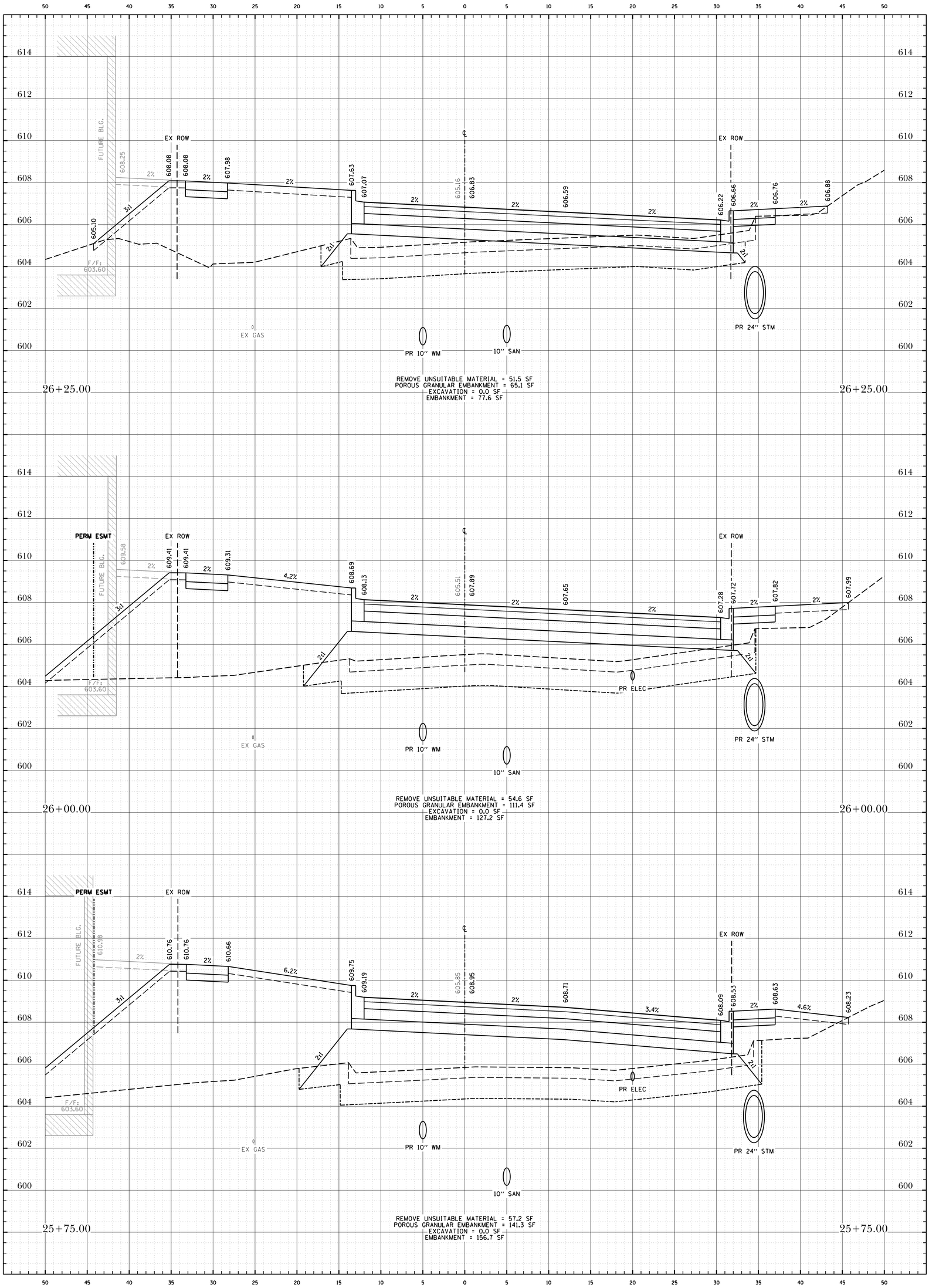

The Reserve at Hudson Crossing - Roadway Improvements

Cross Sections - Adams Street

Oswego, Kendall County, Illinois

TROTTER and ASSOCIATES, INC.
ENGINEERS AND SURVEYORS
40W201 Wasco Road, Suite D
St. Charles, IL 60175
Ph.: 630-587-0470 • Fax: 630-587-0475

PROJECT STAFF	ISSUE	REVISIONS	DATE
PROJECT MANAGER:			
ENGINEER:			
ENGINEER:			
ENGINEER:	5.	ISSUED FOR BIDDING	2/21/19
TECHNICIAN:	4.	PER VILLAGE OF OSWEGO, IDOT, FOX METRO	2/15/19
TECHNICIAN:	3.	REVISIONS PER VILLAGE OF OSWEGO REVIEW	1/11/19
	2.	REVISIONS PER VILLAGE OF OSWEGO REVIEW	12/4/18
	1.	REVISIONS PER VILLAGE OF OSWEGO REVIEW	11/21/18

Project No.: SH0002

File Name: XS_ADAMS.dgn

Issue Date: 02/21/2019

Scale: HORZ: 1" = 5' VERT: 1" = 2'

Sheet Number

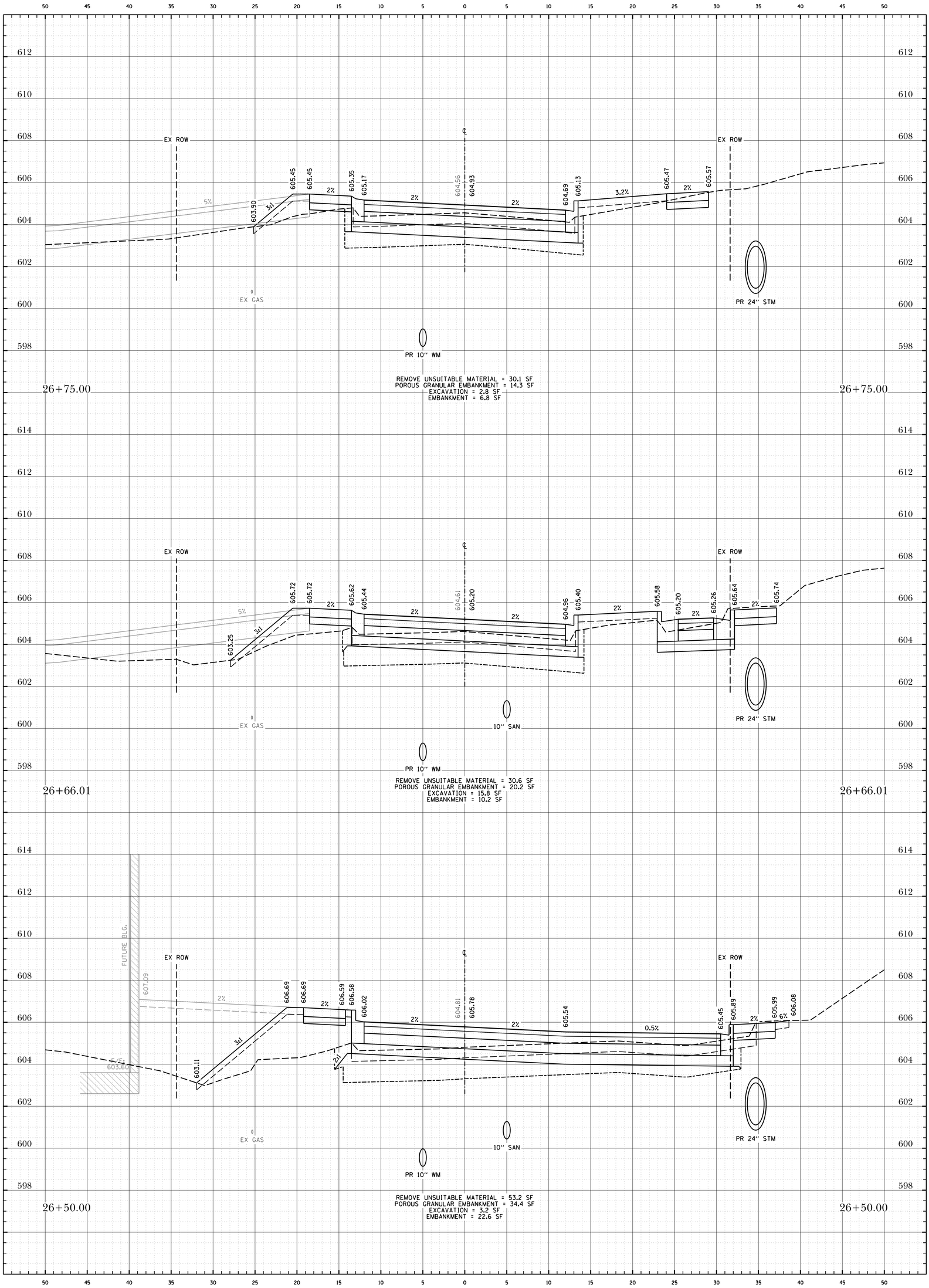

Project No.: SH0002

File Name: XS_ADAMS.dgn

Issue Date: 02/21/2019

Scale: HORZ: 1" = 5' VERT: 1" = 2'

Sheet Number 116

The Reserve at Hudson Crossing - Roadway Improvements

Cross Sections - Adams Street

Oswego, Kendall County, Illinois

TROTTER and ASSOCIATES, INC.
ENGINEERS AND SURVEYORS
40W201 Wasco Road, Suite D
St. Charles, IL 60175
Ph.: 630-587-0470 • Fax: 630-587-0475

PROJECT STAFF	ISSUE	REVISIONS	DATE
PROJECT MANAGER:			
ENGINEER:			
ENGINEER:			
ENGINEER:	5.	ISSUED FOR BIDDING	2/21/19
TECHNICIAN:	4.	PER VILLAGE OF OSWEGO, IDOT, FOX METRO	2/15/19
TECHNICIAN:	3.	REVISIONS PER VILLAGE OF OSWEGO REVIEW	1/11/19
	2.	REVISIONS PER VILLAGE OF OSWEGO REVIEW	12/4/18
	1.	REVISIONS PER VILLAGE OF OSWEGO REVIEW	11/21/18

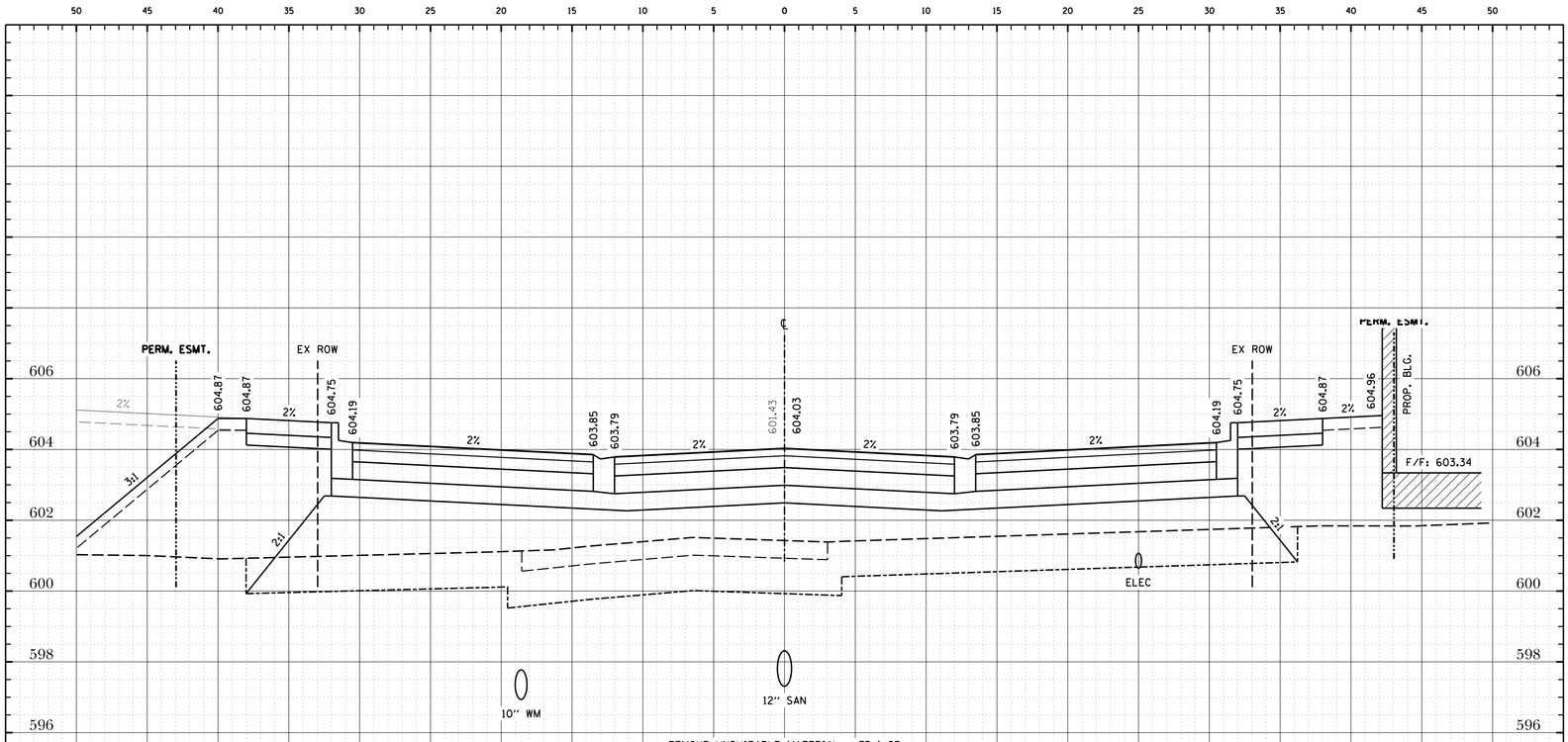

REMOVE UNSUITABLE MATERIAL = 75.4 SF
POROUS GRANULAR EMBANKMENT = 156.1 SF
EXCAVATION = 0.0 SF
EMBANKMENT = 66.9 SF

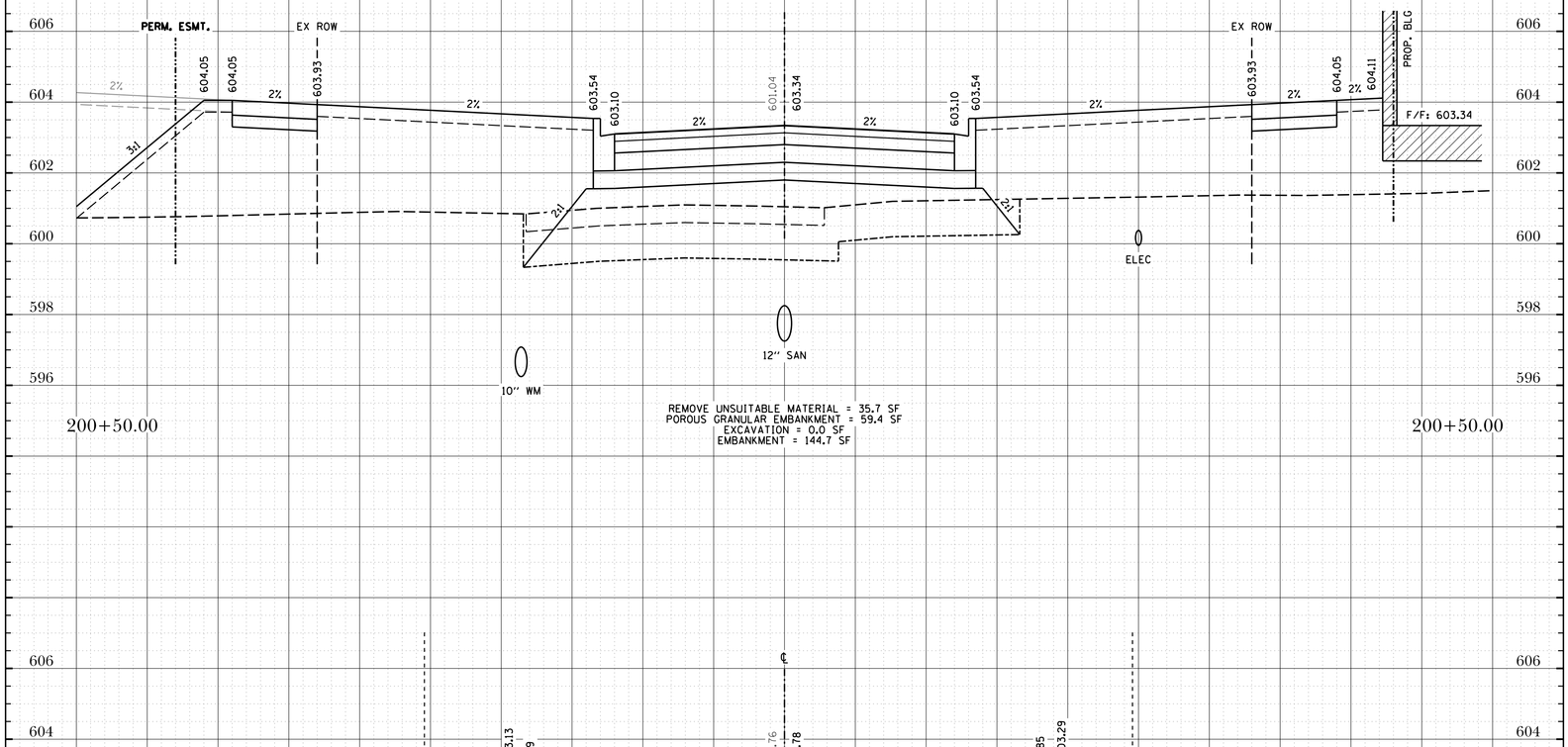

REMOVE UNSUITABLE MATERIAL = 35.7 SF
POROUS GRANULAR EMBANKMENT = 59.4 SF
EXCAVATION = 0.0 SF
EMBANKMENT = 144.7 SF

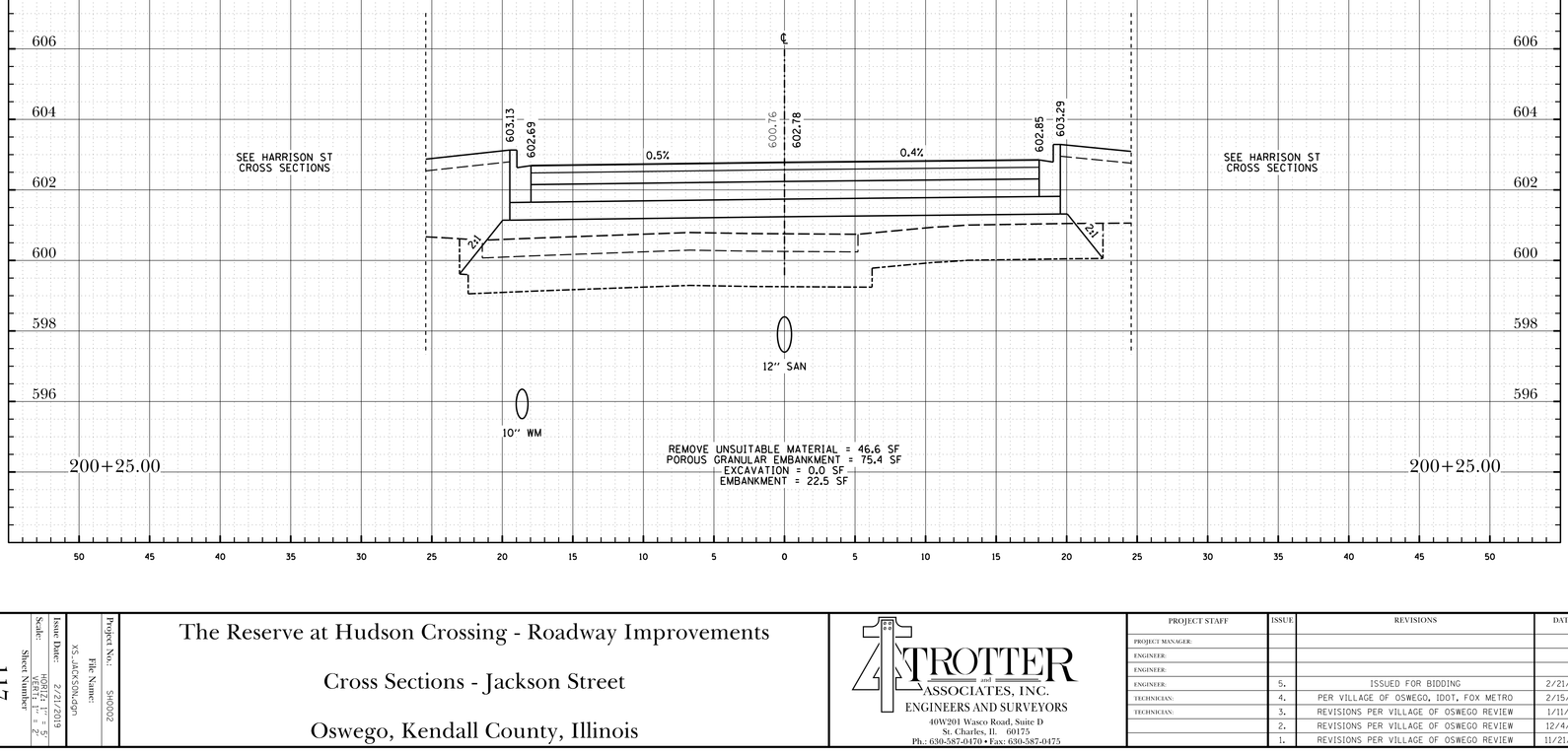

REMOVE UNSUITABLE MATERIAL = 46.6 SF
POROUS GRANULAR EMBANKMENT = 75.4 SF
EXCAVATION = 0.0 SF
EMBANKMENT = 22.5 SF

Project No.: SH0002

File Name: VS_JACKSON.dgn

Issue Date: 02/21/2019

Scale: HORZ: 1" = 5' VERT: 1" = 2'

Sheet Number 117

The Reserve at Hudson Crossing - Roadway Improvements

Cross Sections - Jackson Street

Oswego, Kendall County, Illinois

TROTTER and ASSOCIATES, INC.
ENGINEERS AND SURVEYORS
40W201 Wasco Road, Suite D
St. Charles, IL 60175
Ph.: 630-587-0470 • Fax: 630-587-0475

PROJECT STAFF	ISSUE	REVISIONS	DATE
PROJECT MANAGER:			
ENGINEER:			
ENGINEER:			
ENGINEER:	5.	ISSUED FOR BIDDING	2/21/19
TECHNICIAN:	4.	PER VILLAGE OF OSWEGO, IDOT, FOX METRO	2/15/19
TECHNICIAN:	3.	REVISIONS PER VILLAGE OF OSWEGO REVIEW	1/11/19
	2.	REVISIONS PER VILLAGE OF OSWEGO REVIEW	12/4/18
	1.	REVISIONS PER VILLAGE OF OSWEGO REVIEW	11/21/18

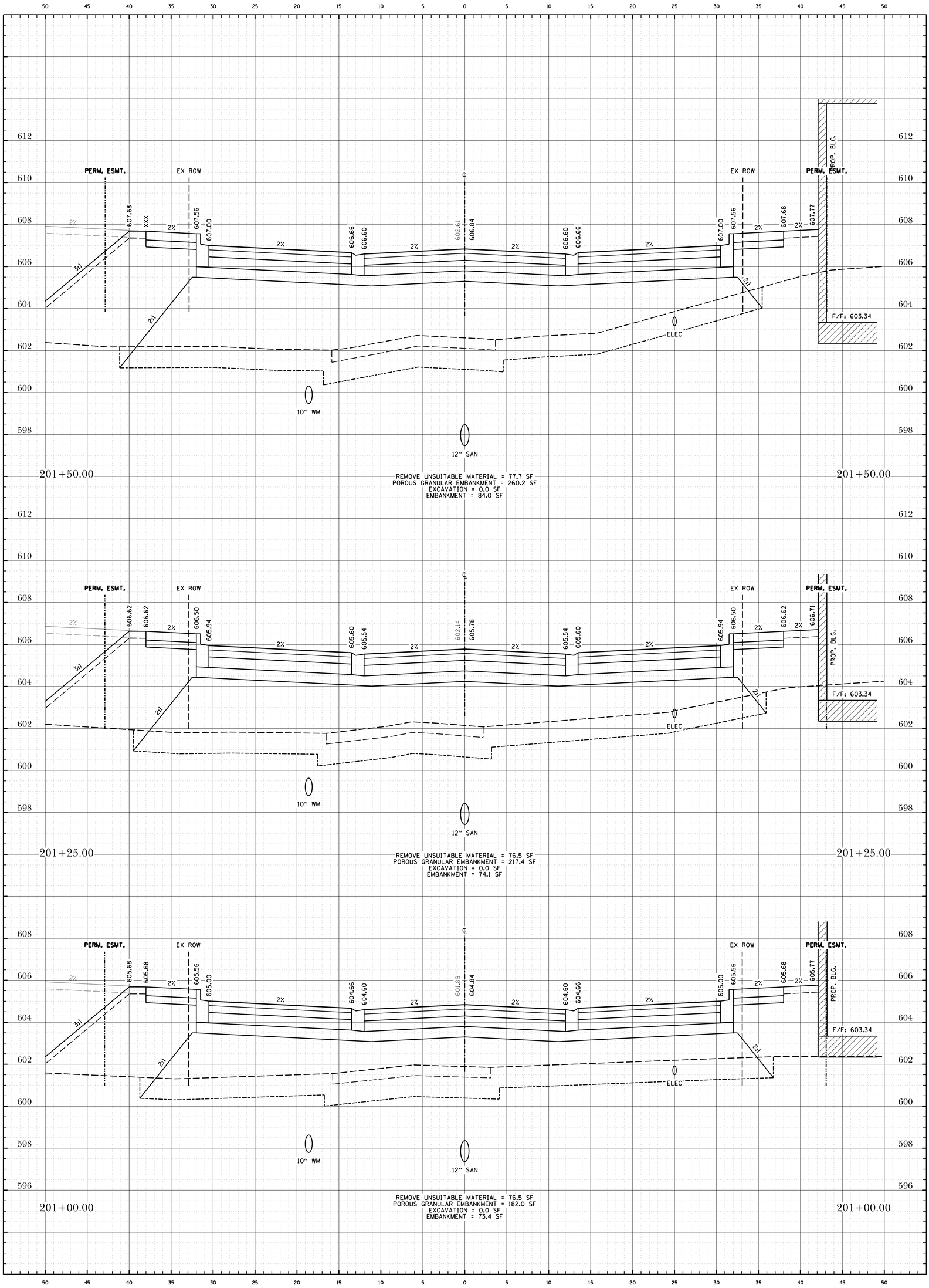

Sheet Number 118

Scale: HORZ: 1" = 5' VERT: 1" = 2'

Issue Date: 10/22/2019

File Name: VS_JACKSON.dgn

Project No.: SH0002

The Reserve at Hudson Crossing - Roadway Improvements

Cross Sections - Jackson Street

Oswego, Kendall County, Illinois

TROTTER and ASSOCIATES, INC.
ENGINEERS AND SURVEYORS
40W201 Wasco Road, Suite D
St. Charles, IL 60175
Ph.: 630-587-0470 • Fax: 630-587-0475

PROJECT STAFF	ISSUE	REVISIONS	DATE
PROJECT MANAGER:			
ENGINEER:			
ENGINEER:			
ENGINEER:	5.	ISSUED FOR BIDDING	2/21/19
TECHNICIAN:	4.	PER VILLAGE OF OSWEGO, IDOT, FOX METRO	2/15/19
TECHNICIAN:	3.	REVISIONS PER VILLAGE OF OSWEGO REVIEW	1/11/19
	2.	REVISIONS PER VILLAGE OF OSWEGO REVIEW	12/4/18
	1.	REVISIONS PER VILLAGE OF OSWEGO REVIEW	11/21/18

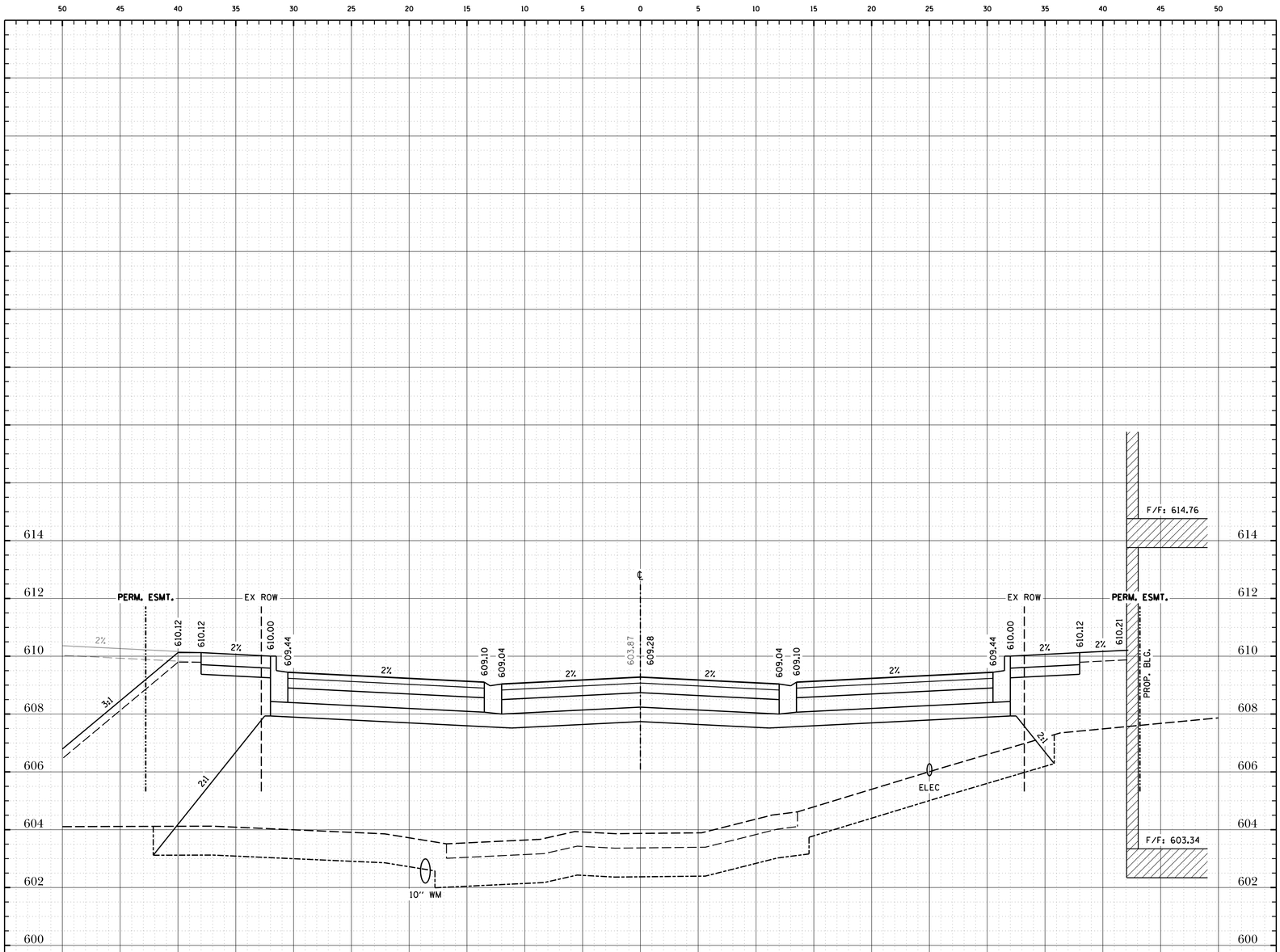

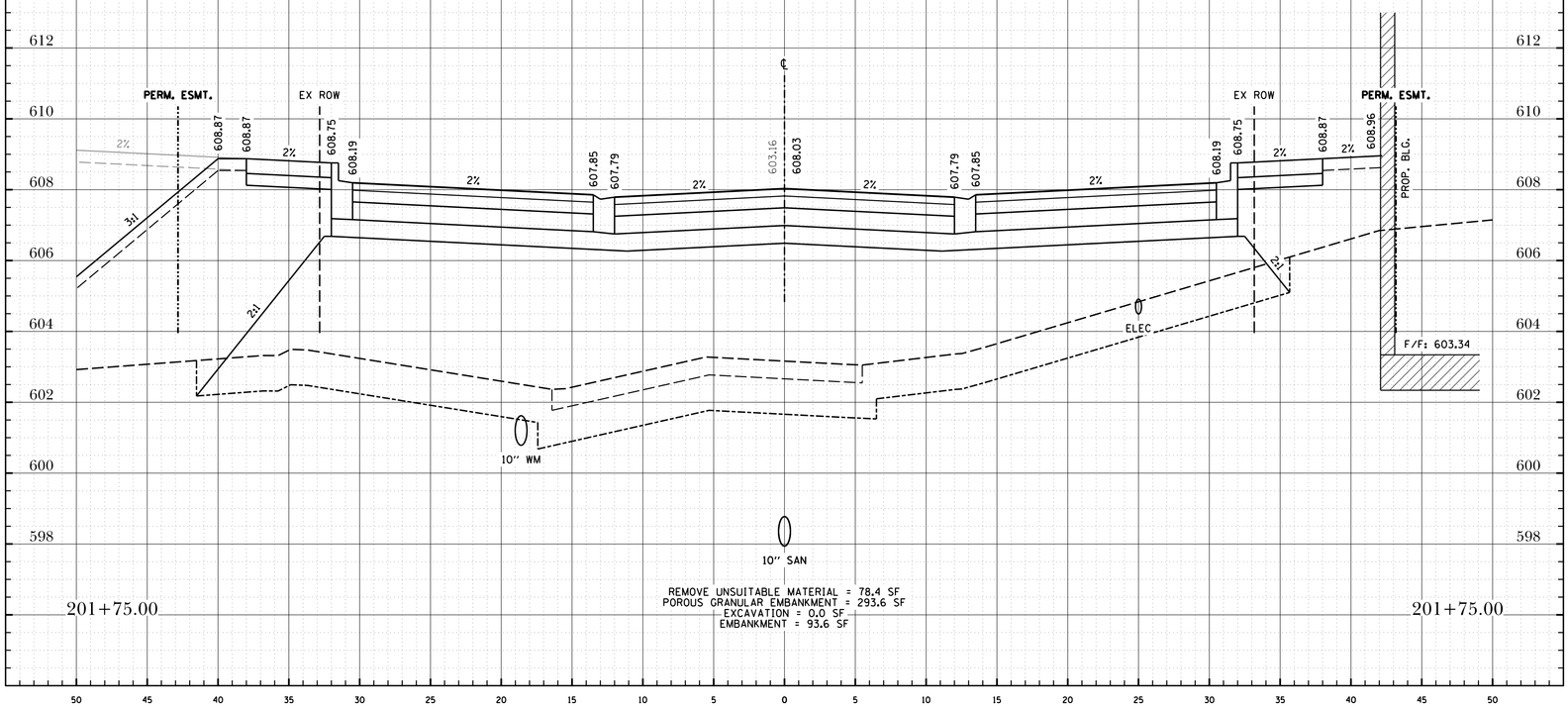

Project No.: SH0002

File Name: VS_JACKSON.dgn

Issue Date: 02/21/2019

Scale: HORZ: 1" = 5' VERT: 1" = 2'

Sheet Number 119

The Reserve at Hudson Crossing - Roadway Improvements

Cross Sections - Jackson Street

Oswego, Kendall County, Illinois

TROTTER and ASSOCIATES, INC.
ENGINEERS AND SURVEYORS
40W201 Wasco Road, Suite D
St. Charles, IL 60175
Ph.: 630-587-0470 • Fax: 630-587-0475

PROJECT STAFF	ISSUE	REVISIONS	DATE
PROJECT MANAGER:			
ENGINEER:			
ENGINEER:			
ENGINEER:	5.	ISSUED FOR BIDDING	2/21/19
TECHNICIAN:	4.	PER VILLAGE OF OSWEGO, IDOT, FOX METRO	2/15/19
TECHNICIAN:	3.	REVISIONS PER VILLAGE OF OSWEGO REVIEW	1/11/19
	2.	REVISIONS PER VILLAGE OF OSWEGO REVIEW	12/4/18
	1.	REVISIONS PER VILLAGE OF OSWEGO REVIEW	11/21/18

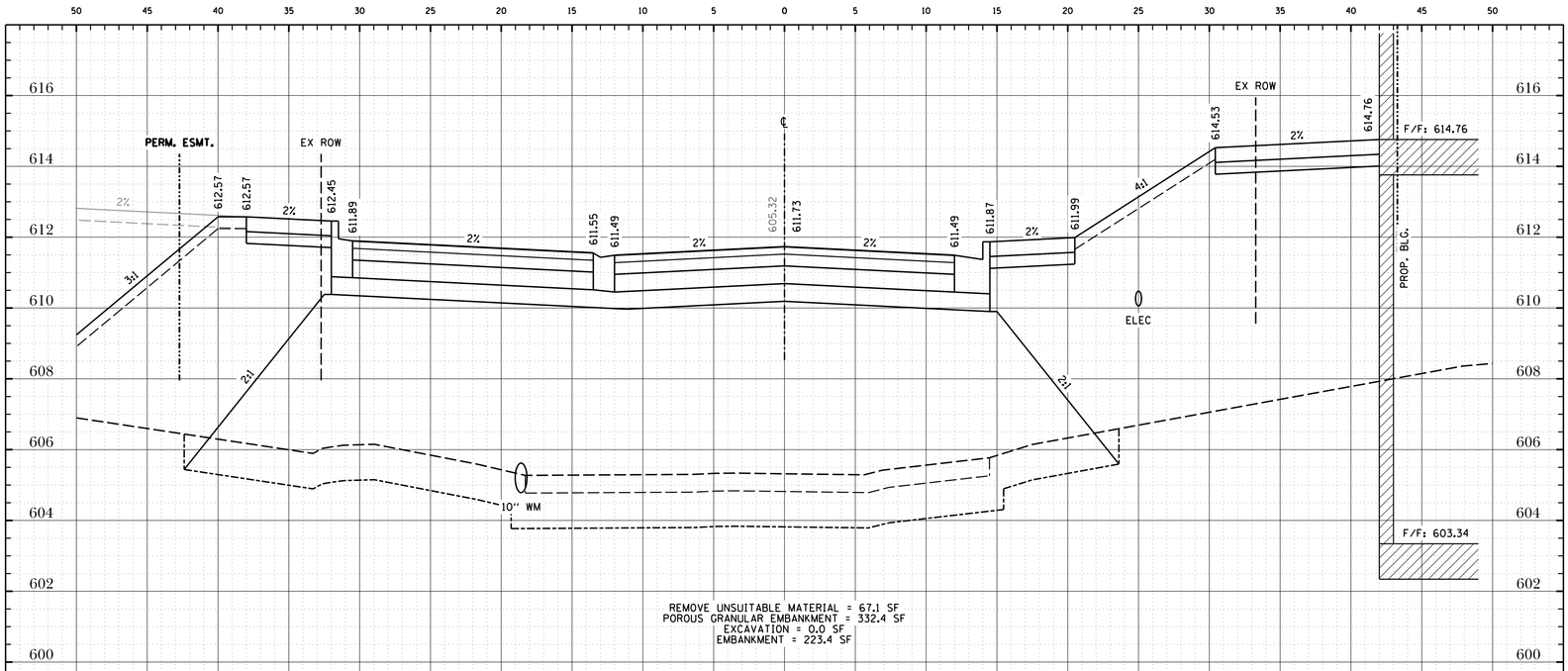

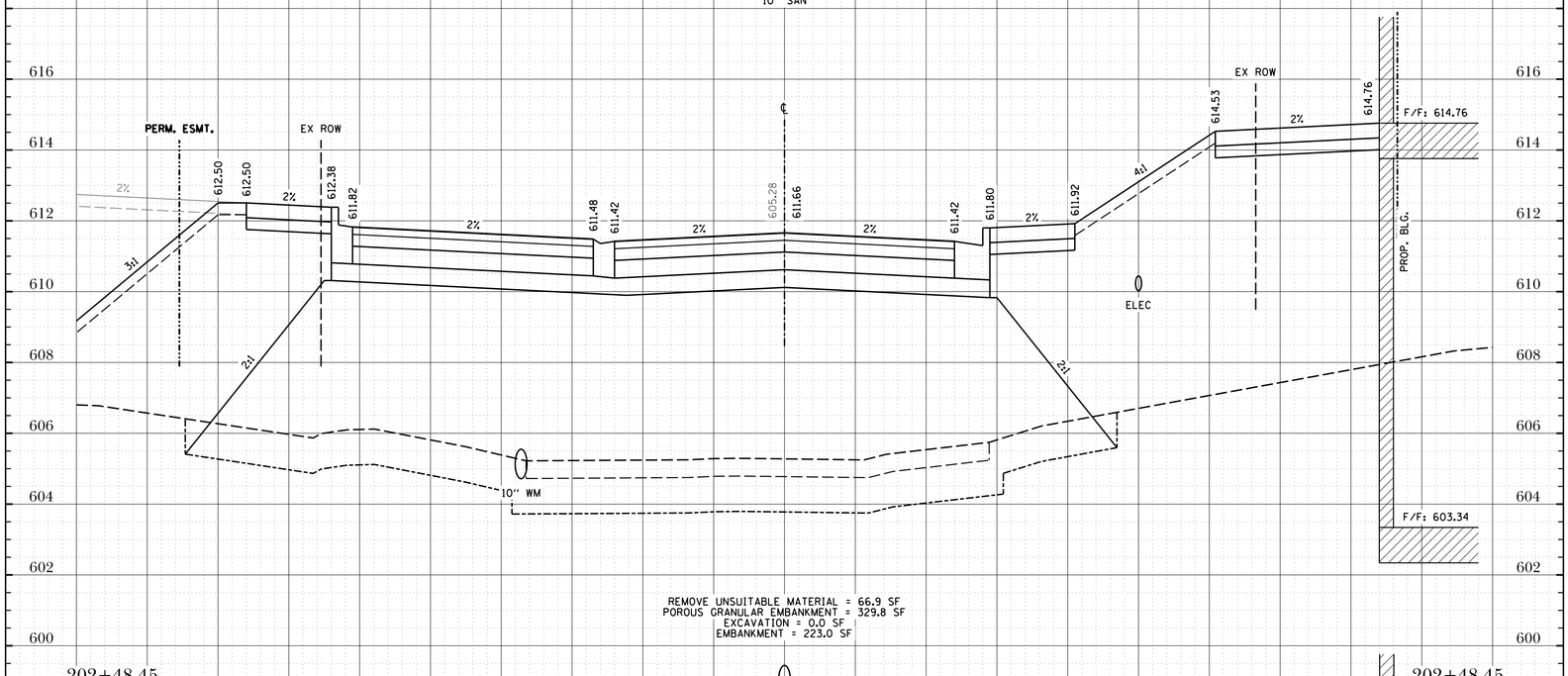

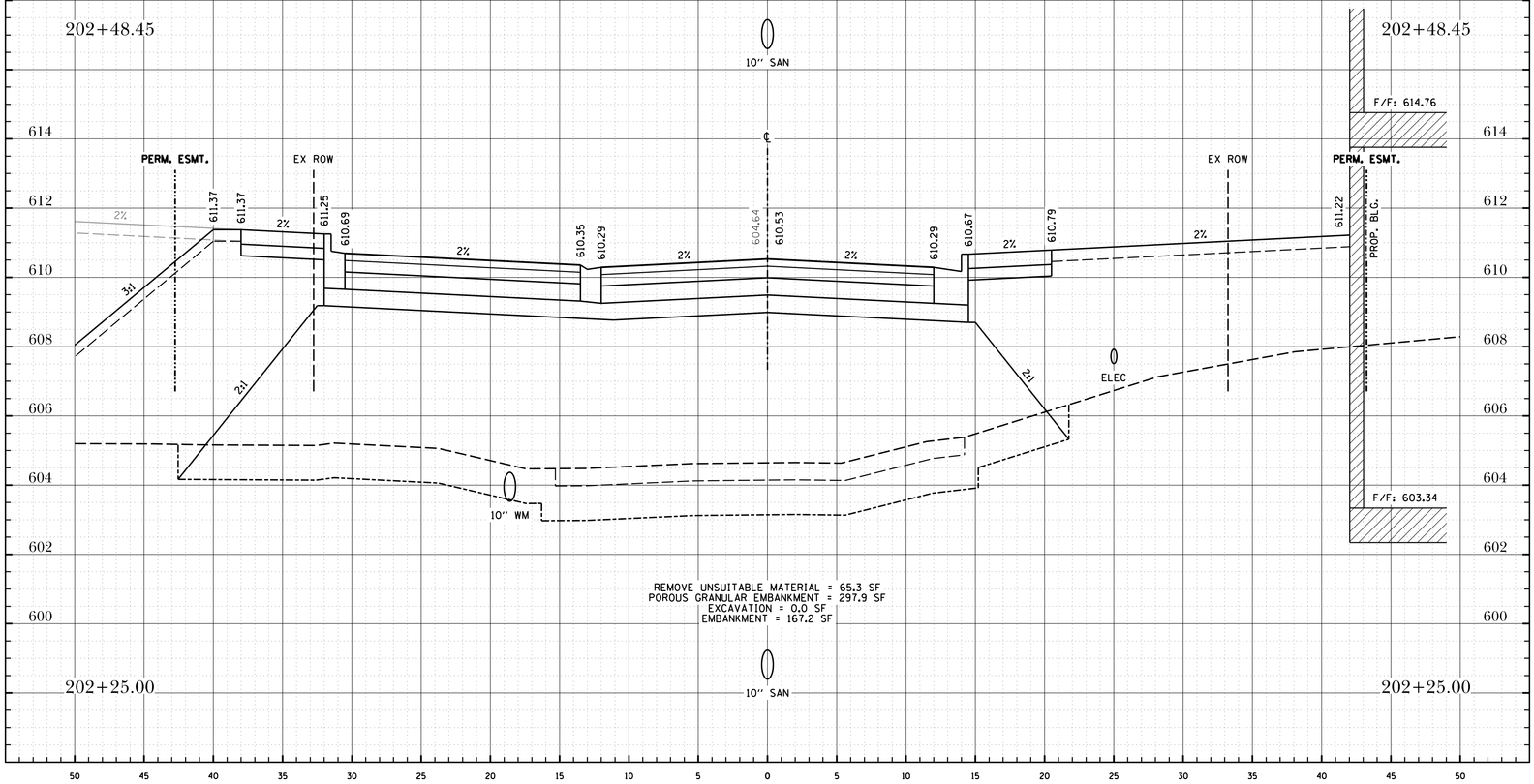

Project No.: SH0002

File Name: VS_JACKSON.dgn

Issue Date: 02/21/2019
VERT: 1" = 5'
HORZ: 1" = 5'
Scale:

Sheet Number 120

The Reserve at Hudson Crossing - Roadway Improvements

Cross Sections - Jackson Street

Oswego, Kendall County, Illinois

TROTTER and ASSOCIATES, INC.
ENGINEERS AND SURVEYORS
40W201 Wasco Road, Suite D
St. Charles, IL 60175
Ph.: 630-587-0470 • Fax: 630-587-0475

PROJECT STAFF	ISSUE	REVISIONS	DATE
PROJECT MANAGER:			
ENGINEER:			
ENGINEER:			
ENGINEER:	5.	ISSUED FOR BIDDING	2/21/19
TECHNICIAN:	4.	PER VILLAGE OF OSWEGO, IDOT, FOX METRO	2/15/19
TECHNICIAN:	3.	REVISIONS PER VILLAGE OF OSWEGO REVIEW	1/11/19
	2.	REVISIONS PER VILLAGE OF OSWEGO REVIEW	12/4/18
	1.	REVISIONS PER VILLAGE OF OSWEGO REVIEW	11/21/18

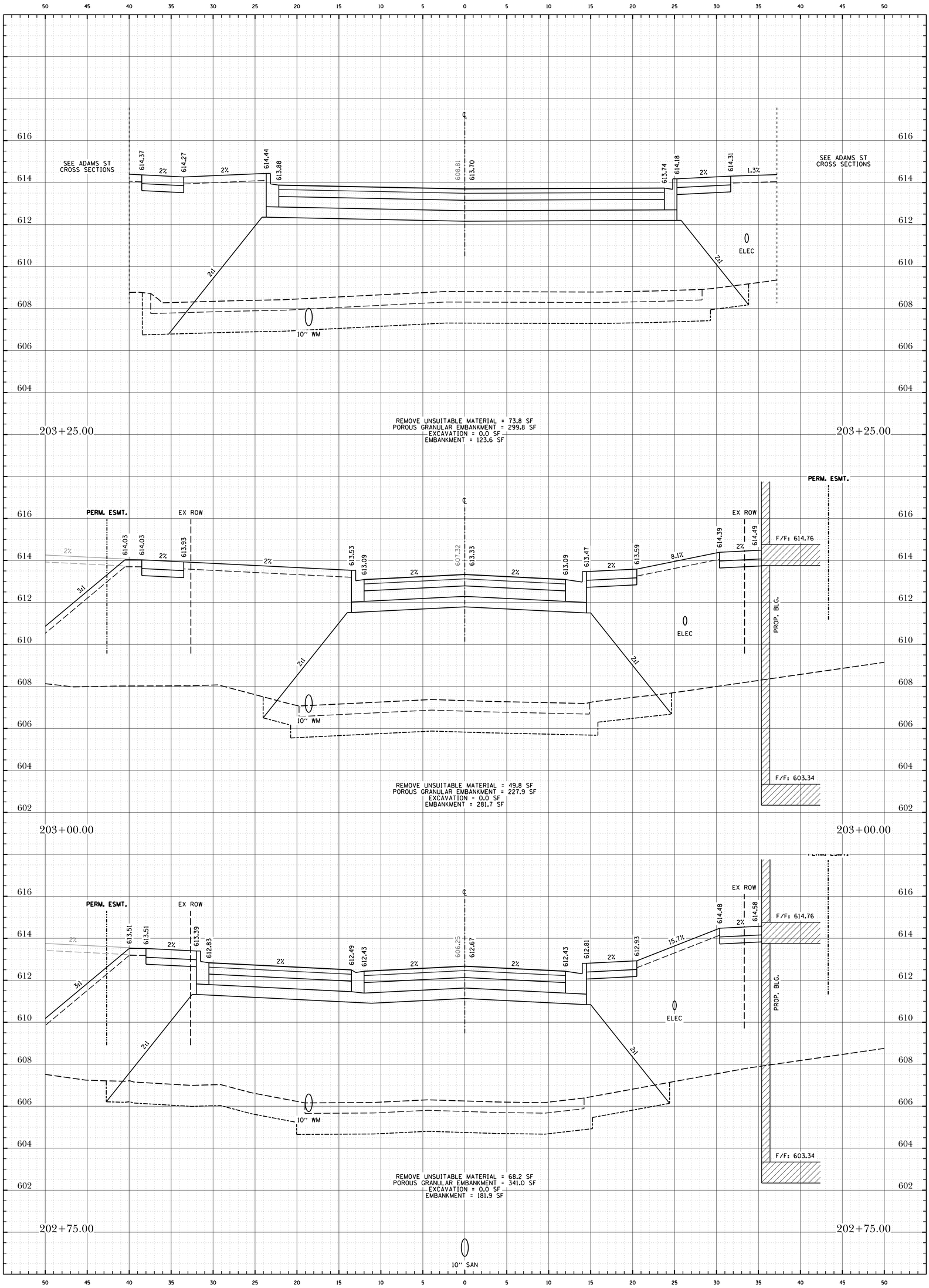

Project No.:	5H0002
File Name:	VS_JACKSON.dgn
Issue Date:	10/27/2019
Scale:	VERT: 1" = 5' HORZ: 1" = 5'
Sheet Number	121

The Reserve at Hudson Crossing - Roadway Improvements

Cross Sections - Jackson Street

Oswego, Kendall County, Illinois

TROTTER and ASSOCIATES, INC.
ENGINEERS AND SURVEYORS
40W201 Wasco Road, Suite D
St. Charles, IL 60175
Ph.: 630-587-0470 • Fax: 630-587-0475

PROJECT STAFF	ISSUE	REVISIONS	DATE
PROJECT MANAGER:			
ENGINEER:			
ENGINEER:			
ENGINEER:	5.	ISSUED FOR BIDDING	2/21/19
TECHNICIAN:	4.	PER VILLAGE OF OSWEGO, IDOT, FOX METRO	2/15/19
TECHNICIAN:	3.	REVISIONS PER VILLAGE OF OSWEGO REVIEW	1/11/19
	2.	REVISIONS PER VILLAGE OF OSWEGO REVIEW	12/4/18
	1.	REVISIONS PER VILLAGE OF OSWEGO REVIEW	11/21/18

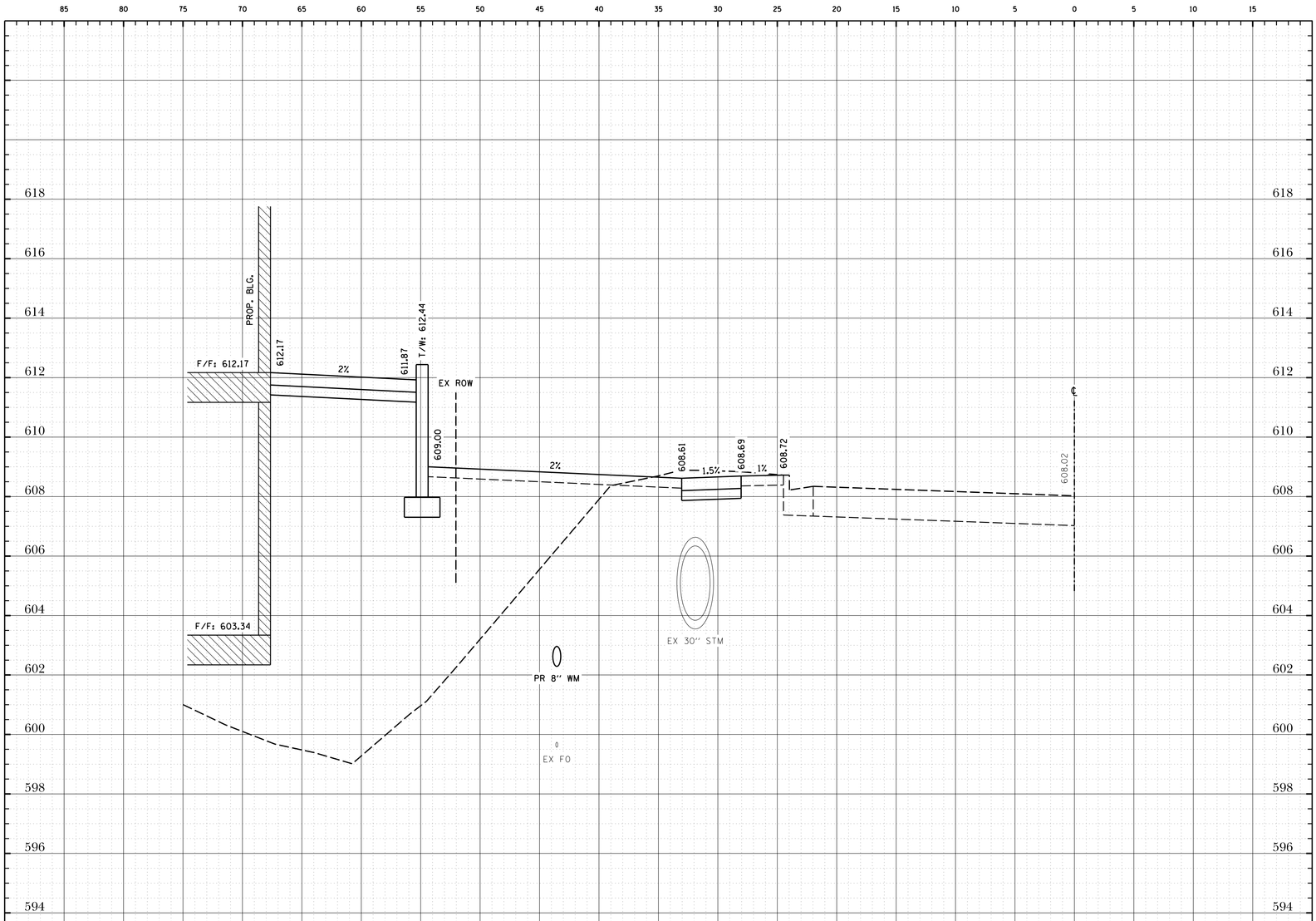

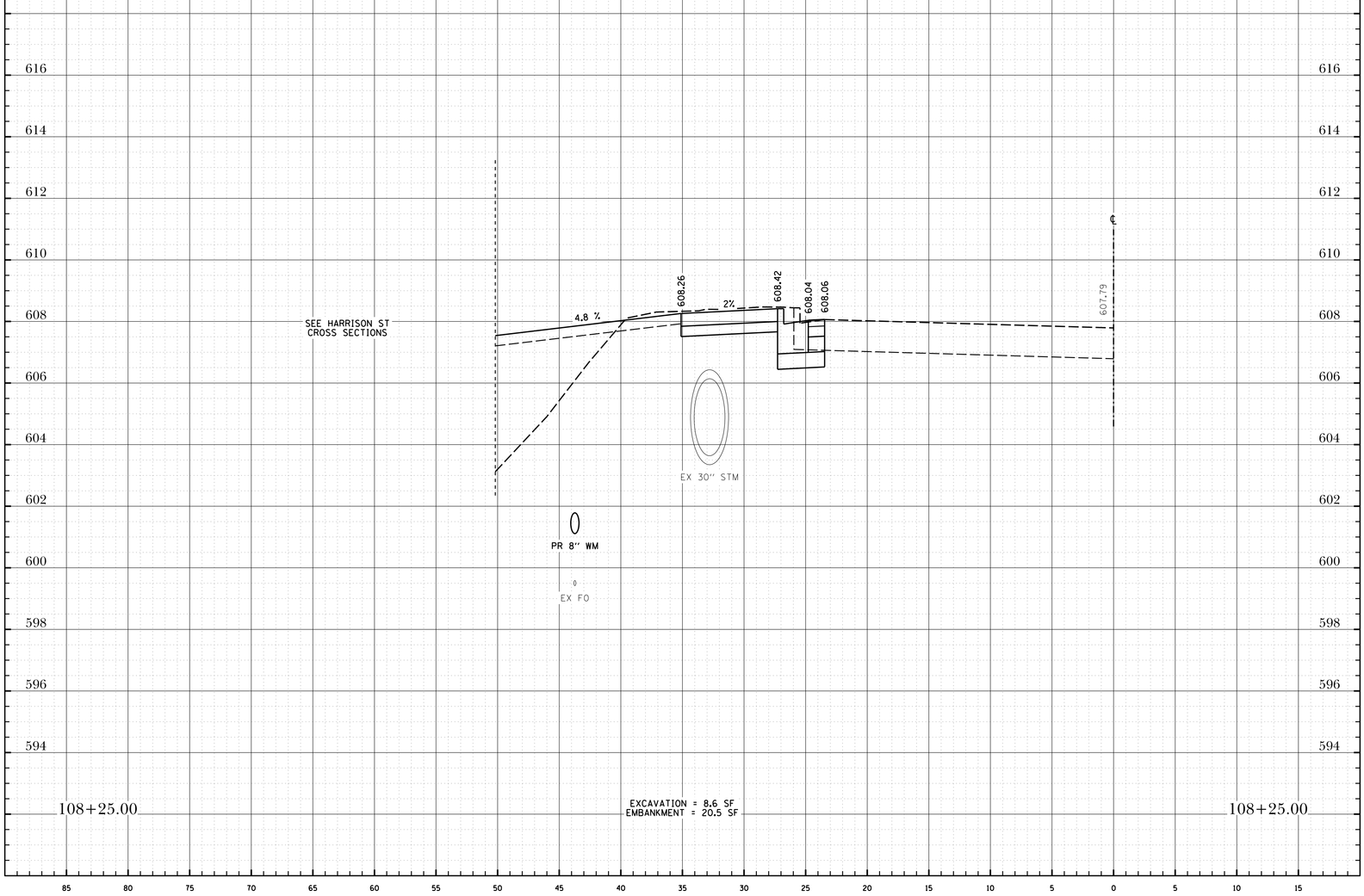

Project No.: SH0002

File Name: YS_MASHINGTON.dgn

Issue Date: 02/21/2019

Scale: HORZ: 1" = 5' VERT: 1" = 2'

Sheet Number 122

The Reserve at Hudson Crossing - Roadway Improvements

Cross Sections - Washington Street

Oswego, Kendall County, Illinois

TROTTER and ASSOCIATES, INC.
ENGINEERS AND SURVEYORS
40W201 Wasco Road, Suite D
St. Charles, IL 60175
Ph.: 630-587-0470 • Fax: 630-587-0475

PROJECT STAFF	ISSUE	REVISIONS	DATE
PROJECT MANAGER:			
ENGINEER:			
ENGINEER:			
ENGINEER:	5.	ISSUED FOR BIDDING	2/21/19
TECHNICIAN:	4.	PER VILLAGE OF OSWEGO, IDOT, FOX METRO	2/15/19
TECHNICIAN:	3.	REVISIONS PER VILLAGE OF OSWEGO REVIEW	1/11/19
	2.	REVISIONS PER VILLAGE OF OSWEGO REVIEW	12/4/18
	1.	REVISIONS PER VILLAGE OF OSWEGO REVIEW	11/21/18

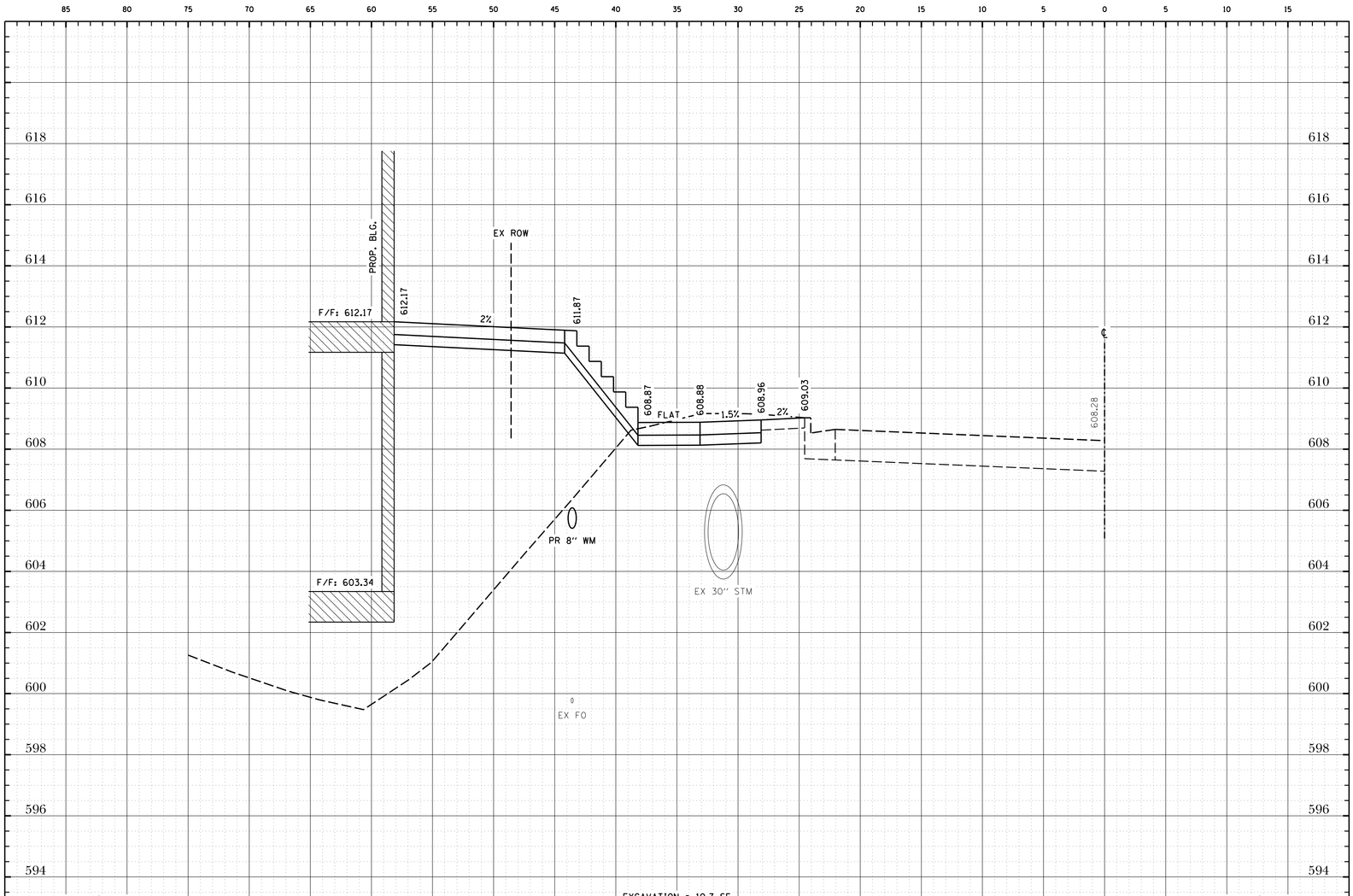

108+75.00

EXCAVATION = 10.7 SF
EMBANKMENT = 130.0 SF

108+75.00

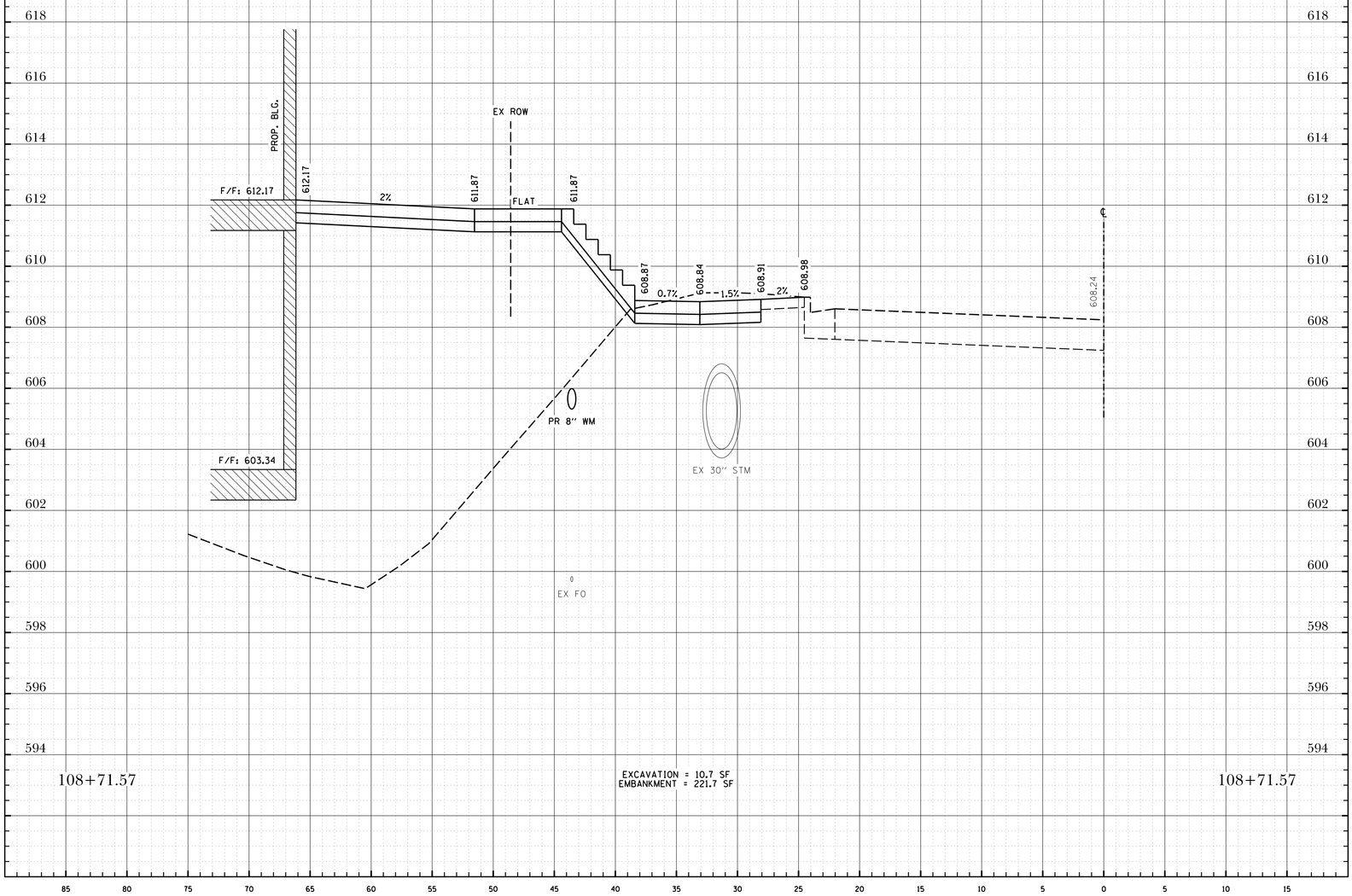

108+71.57

EXCAVATION = 10.7 SF
EMBANKMENT = 221.7 SF

108+71.57

Project No.: SH0002

File Name: YS_WASHINGTON.dgn

Issue Date: 02/21/2019

Scale: HORZ: 1" = 5' VERT: 1" = 2'

Sheet Number 123

The Reserve at Hudson Crossing - Roadway Improvements

Cross Sections - Washington Street

Oswego, Kendall County, Illinois

TROTTER and ASSOCIATES, INC.
ENGINEERS AND SURVEYORS
40W201 Wasco Road, Suite D
St. Charles, IL 60175
Ph.: 630-587-0470 • Fax: 630-587-0475

PROJECT STAFF	ISSUE	REVISIONS	DATE
PROJECT MANAGER:			
ENGINEER:			
ENGINEER:			
ENGINEER:	5.	ISSUED FOR BIDDING	2/21/19
TECHNICIAN:	4.	PER VILLAGE OF OSWEGO, IDOT, FOX METRO	2/15/19
TECHNICIAN:	3.	REVISIONS PER VILLAGE OF OSWEGO REVIEW	1/11/19
	2.	REVISIONS PER VILLAGE OF OSWEGO REVIEW	12/4/18
	1.	REVISIONS PER VILLAGE OF OSWEGO REVIEW	11/21/18

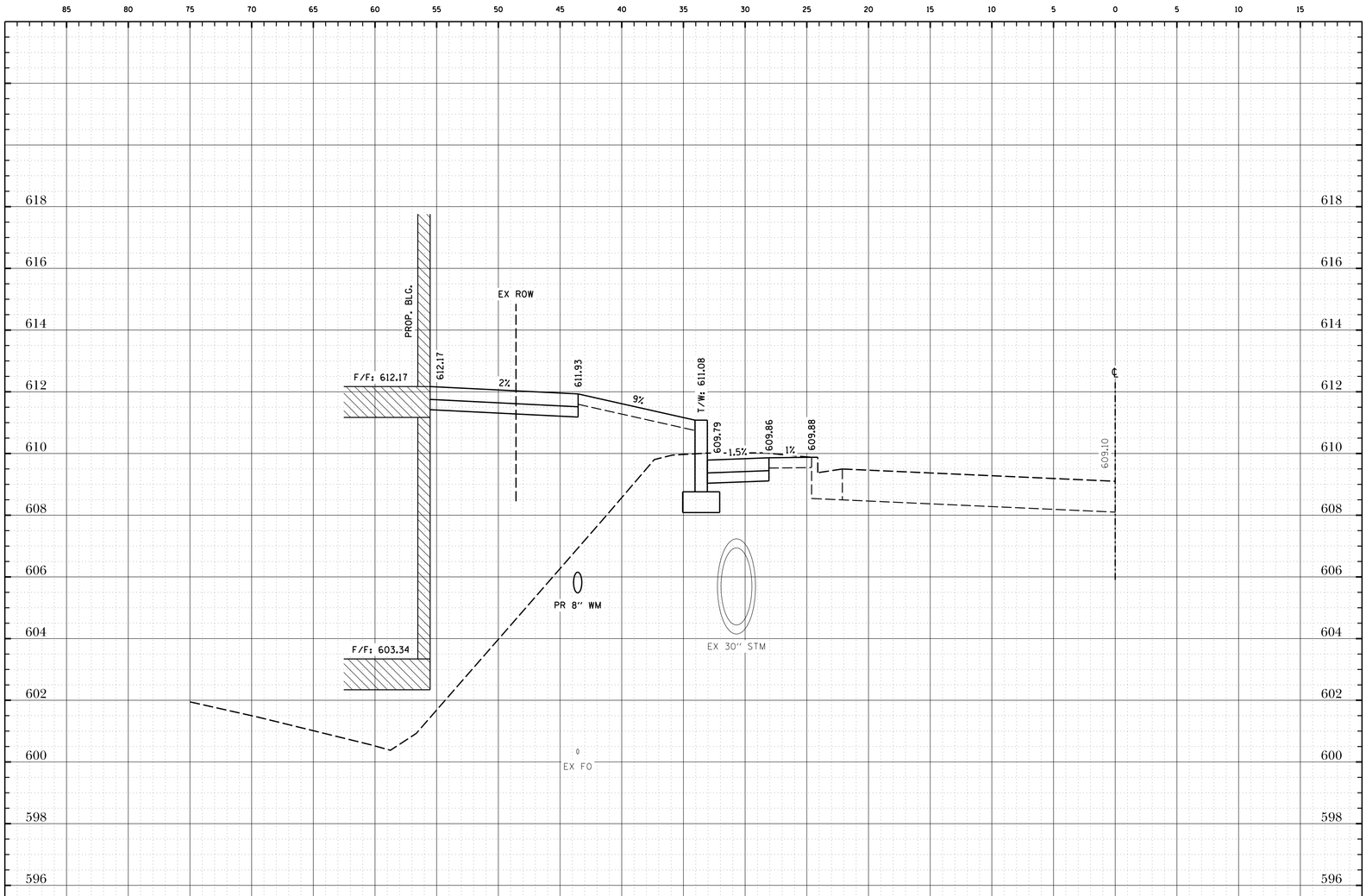

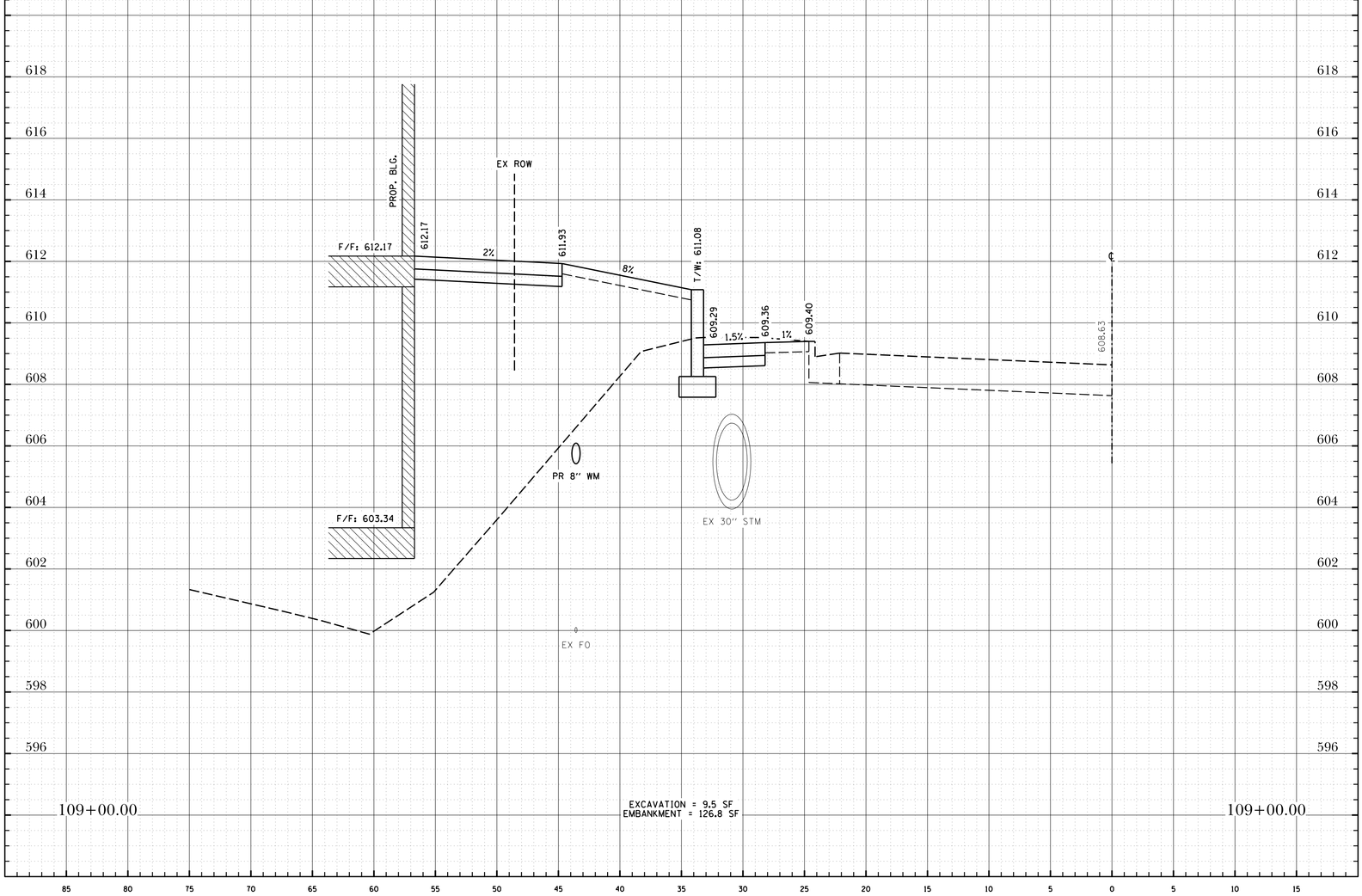

Project No.:	SH0002
File Name:	YS_WASHINGTON.dgn
Issue Date:	02/21/2019
Scale:	HORZ: 1" = 5' VERT: 1" = 2'
Sheet Number	124

The Reserve at Hudson Crossing - Roadway Improvements

Cross Sections - Washington Street

Oswego, Kendall County, Illinois

TROTTER and ASSOCIATES, INC.
ENGINEERS AND SURVEYORS
40W201 Wasco Road, Suite D
St. Charles, IL 60175
Ph.: 630-587-0470 • Fax: 630-587-0475

PROJECT STAFF	ISSUE	REVISIONS	DATE
PROJECT MANAGER:			
ENGINEER:			
ENGINEER:			
ENGINEER:	5.	ISSUED FOR BIDDING	2/21/19
TECHNICIAN:	4.	PER VILLAGE OF OSWEGO, IDOT, FOX METRO	2/15/19
TECHNICIAN:	3.	REVISIONS PER VILLAGE OF OSWEGO REVIEW	1/11/19
	2.	REVISIONS PER VILLAGE OF OSWEGO REVIEW	12/4/18
	1.	REVISIONS PER VILLAGE OF OSWEGO REVIEW	11/21/18

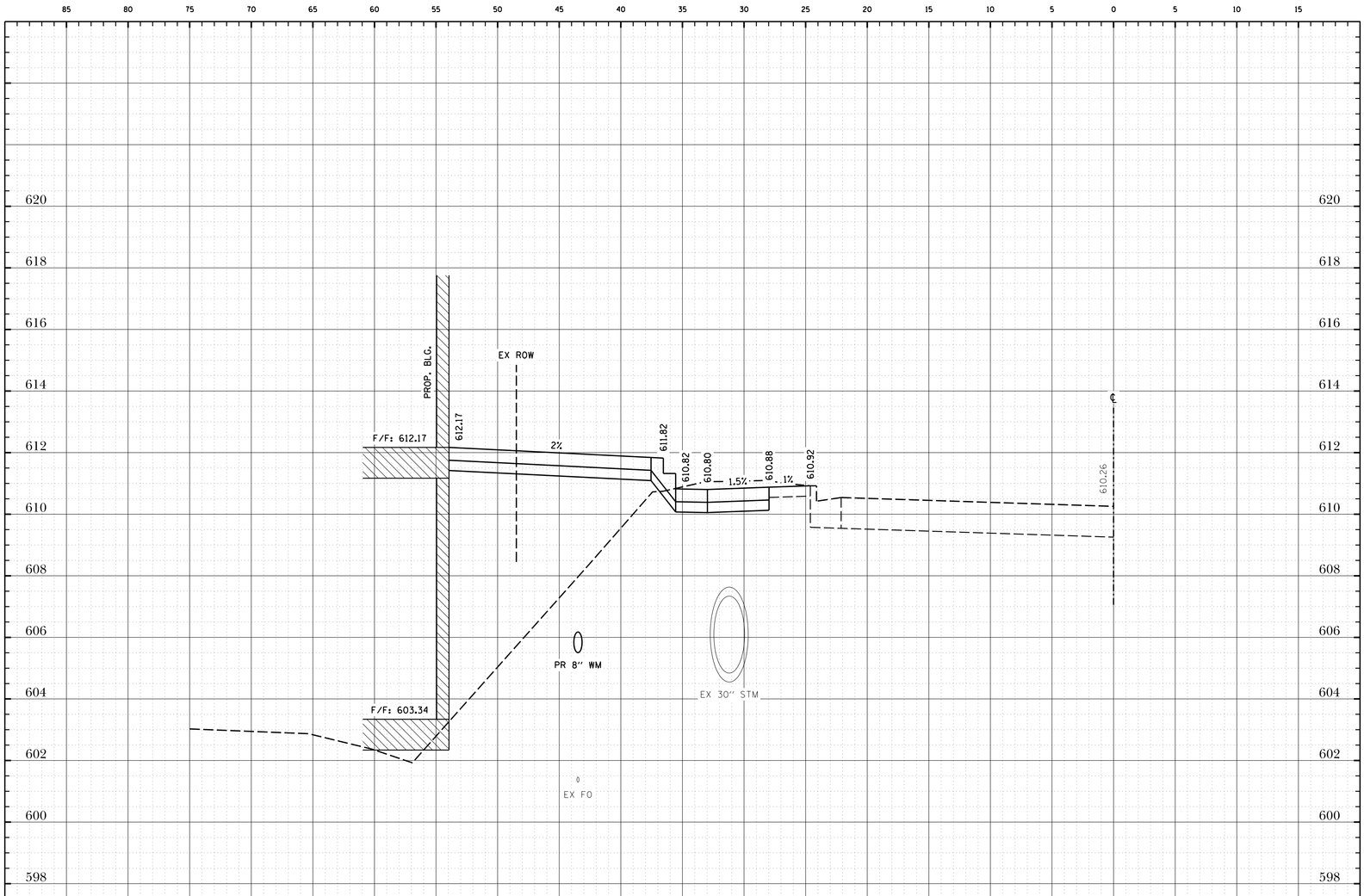

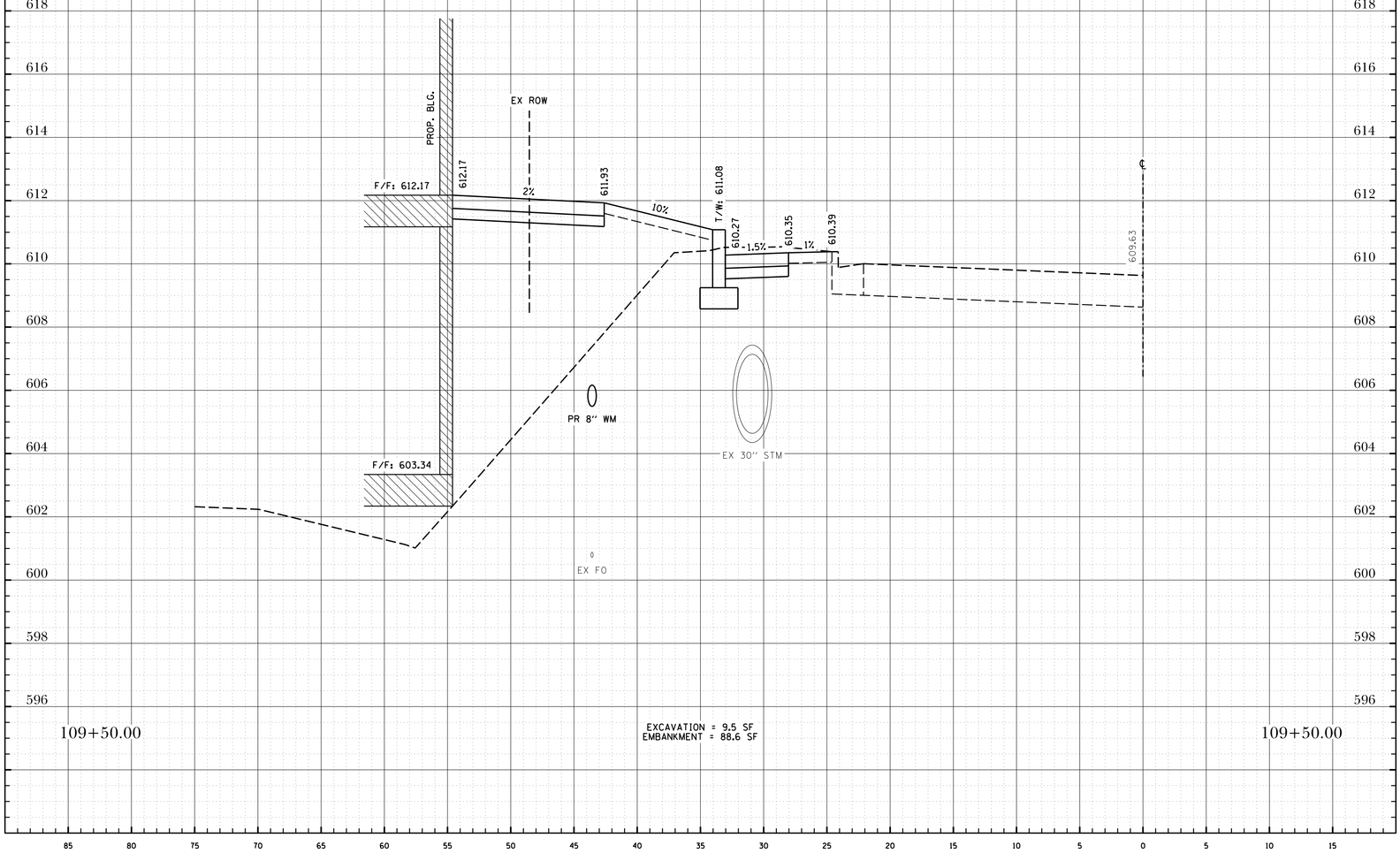

Project No.: SH0002

File Name: YS_MASHINGTON.dgn

Issue Date: 02/21/2019

Scale: HORZ: 1" = 5' VERT: 1" = 2'

Sheet Number 125

The Reserve at Hudson Crossing - Roadway Improvements

Cross Sections - Washington Street

Oswego, Kendall County, Illinois

TROTTER and ASSOCIATES, INC.
ENGINEERS AND SURVEYORS
40W201 Wasco Road, Suite D
St. Charles, IL 60175
Ph.: 630-587-0470 • Fax: 630-587-0475

PROJECT STAFF	ISSUE	REVISIONS	DATE
PROJECT MANAGER:			
ENGINEER:			
ENGINEER:			
ENGINEER:	5.	ISSUED FOR BIDDING	2/21/19
TECHNICIAN:	4.	PER VILLAGE OF OSWEGO, IDOT, FOX METRO	2/15/19
TECHNICIAN:	3.	REVISIONS PER VILLAGE OF OSWEGO REVIEW	1/11/19
	2.	REVISIONS PER VILLAGE OF OSWEGO REVIEW	12/4/18
	1.	REVISIONS PER VILLAGE OF OSWEGO REVIEW	11/21/18

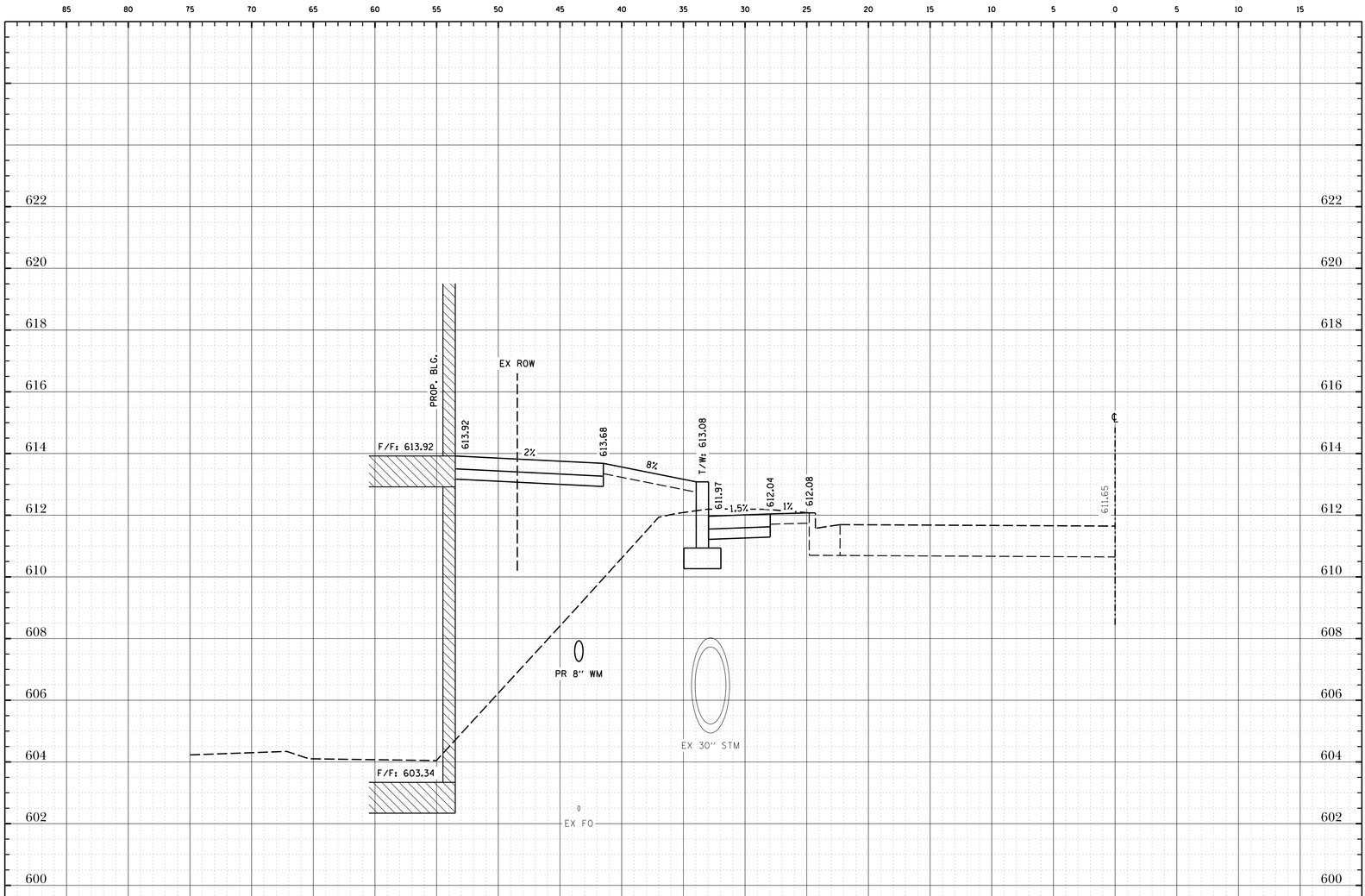

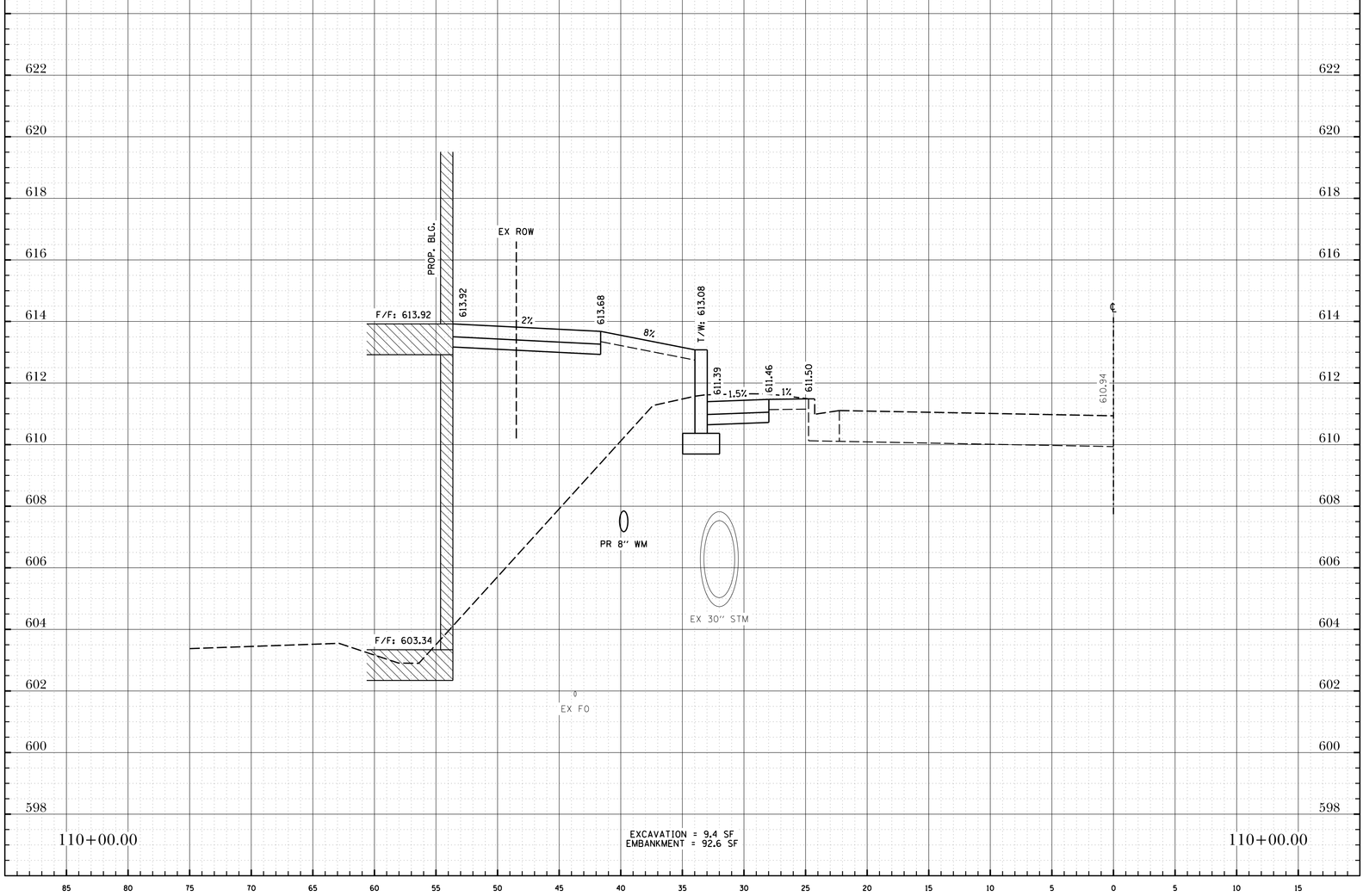

Issue Date: 02/21/2019
Scale: HORZ: 1" = 5' VERT: 1" = 2'
Sheet Number 126

Project No.: SH0002
File Name: YS_MASHINGTON.dgn

The Reserve at Hudson Crossing - Roadway Improvements

Cross Sections - Washington Street

Oswego, Kendall County, Illinois

TROTTER and ASSOCIATES, INC.
ENGINEERS AND SURVEYORS
40W201 Wasco Road, Suite D
St. Charles, IL 60175
Ph.: 630-587-0470 • Fax: 630-587-0475

PROJECT STAFF	ISSUE	REVISIONS	DATE
PROJECT MANAGER:			
ENGINEER:			
ENGINEER:			
ENGINEER:	5.	ISSUED FOR BIDDING	2/21/19
TECHNICIAN:	4.	PER VILLAGE OF OSWEGO, IDOT, FOX METRO	2/15/19
TECHNICIAN:	3.	REVISIONS PER VILLAGE OF OSWEGO REVIEW	1/11/19
	2.	REVISIONS PER VILLAGE OF OSWEGO REVIEW	12/4/18
	1.	REVISIONS PER VILLAGE OF OSWEGO REVIEW	11/21/18

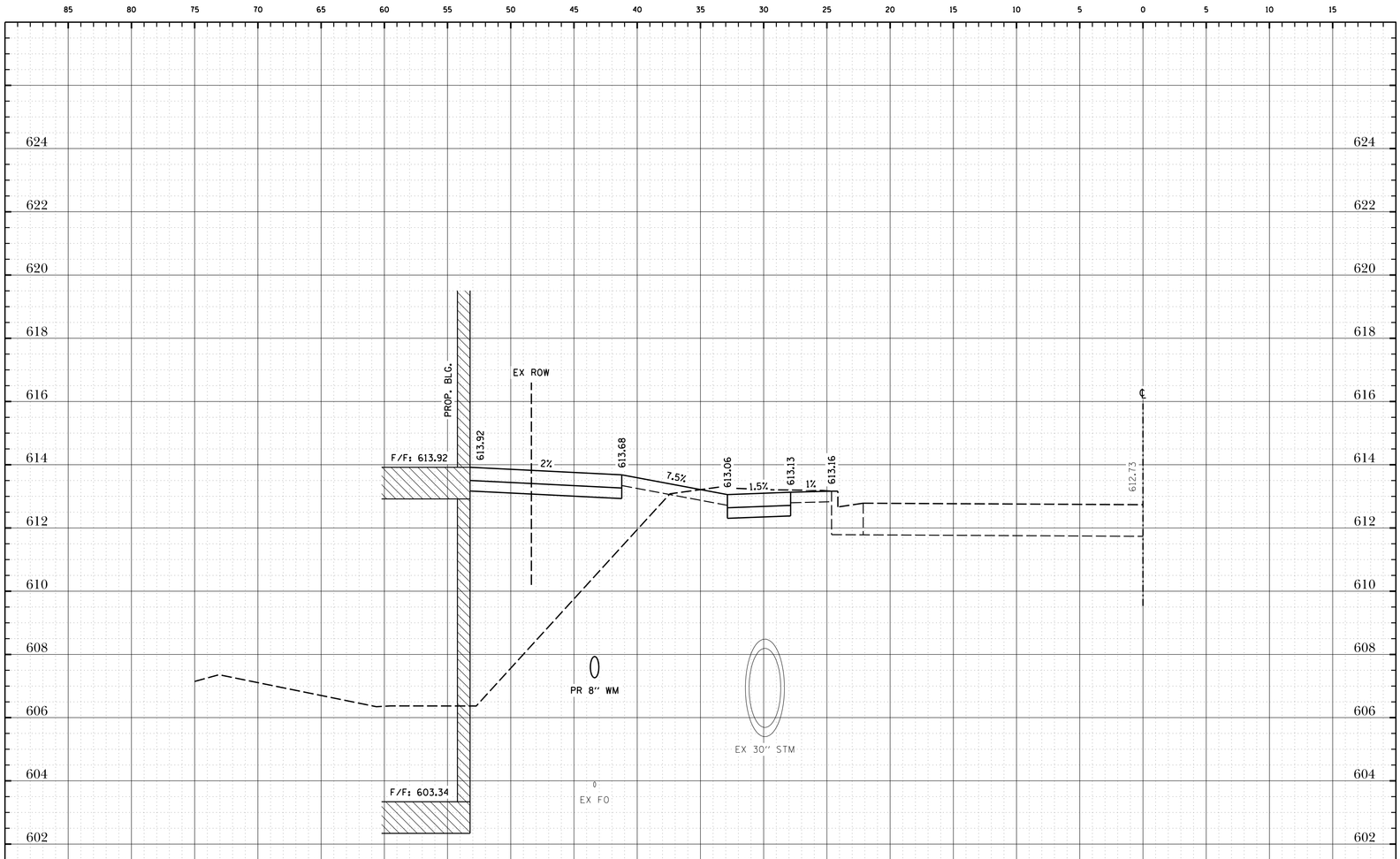

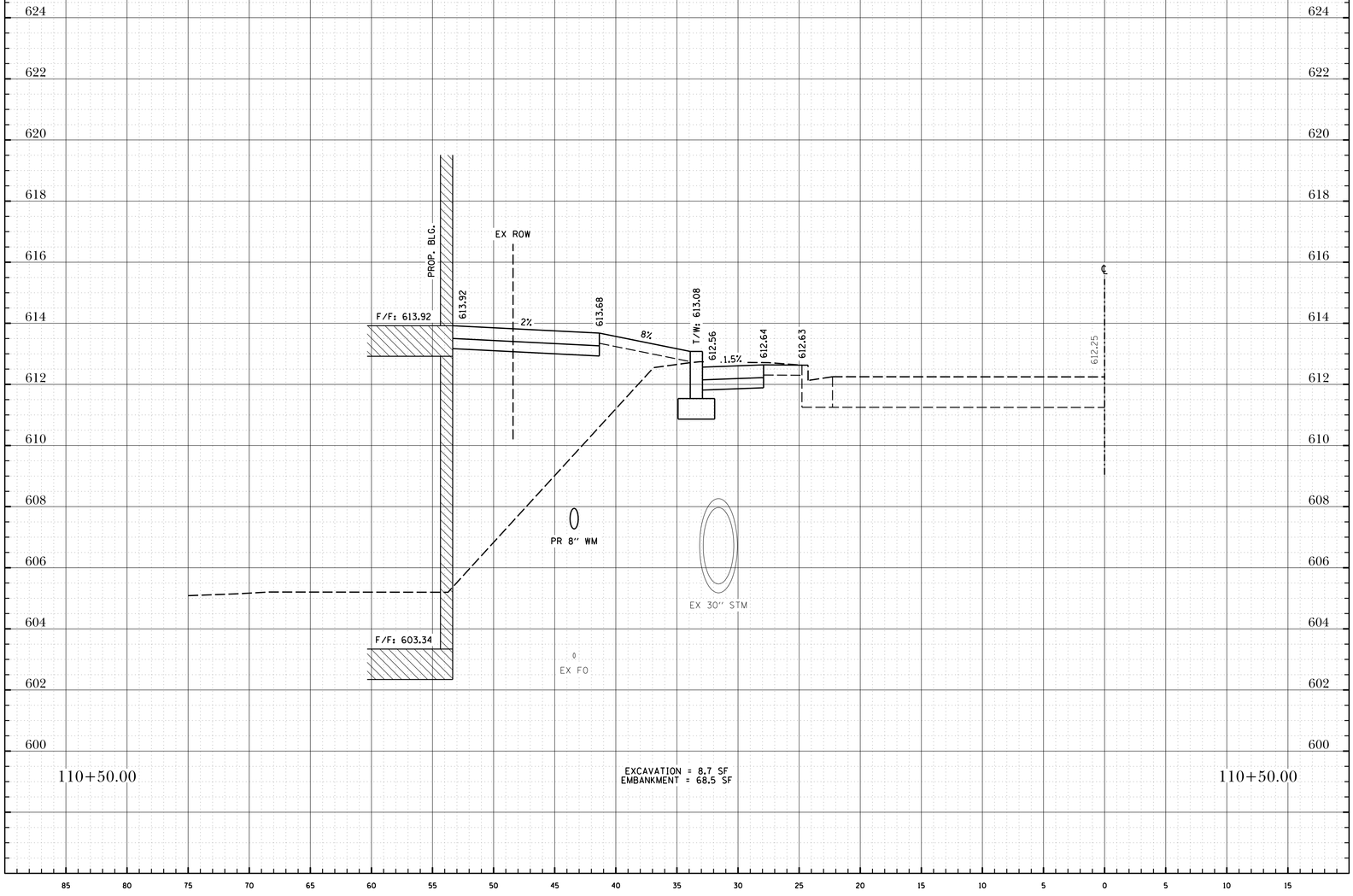

Project No.: SH0002

File Name: YS_MASHINGTON.dgn

Issue Date: 02/21/2019

Scale: HORZ: 1" = 5' VERT: 1" = 2'

Sheet Number 127

The Reserve at Hudson Crossing - Roadway Improvements

Cross Sections - Washington Street

Oswego, Kendall County, Illinois

TROTTER and ASSOCIATES, INC.
ENGINEERS AND SURVEYORS
40W201 Wasco Road, Suite D
St. Charles, IL 60175
Ph.: 630-587-0470 • Fax: 630-587-0475

PROJECT STAFF	ISSUE	REVISIONS	DATE
PROJECT MANAGER:			
ENGINEER:			
ENGINEER:			
ENGINEER:	5.	ISSUED FOR BIDDING	2/21/19
TECHNICIAN:	4.	PER VILLAGE OF OSWEGO, IDOT, FOX METRO	2/15/19
TECHNICIAN:	3.	REVISIONS PER VILLAGE OF OSWEGO REVIEW	1/11/19
	2.	REVISIONS PER VILLAGE OF OSWEGO REVIEW	12/4/18
	1.	REVISIONS PER VILLAGE OF OSWEGO REVIEW	11/21/18

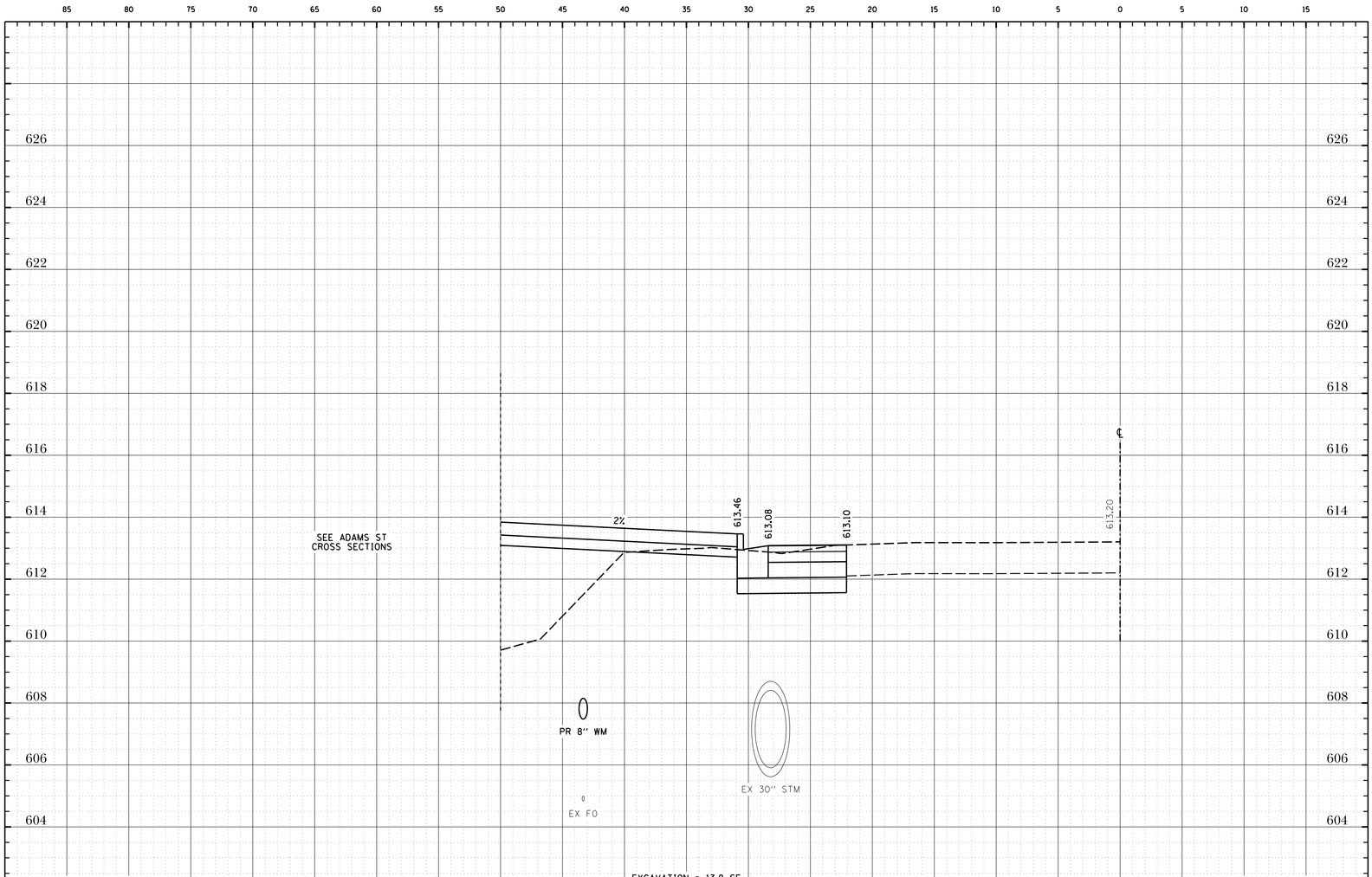

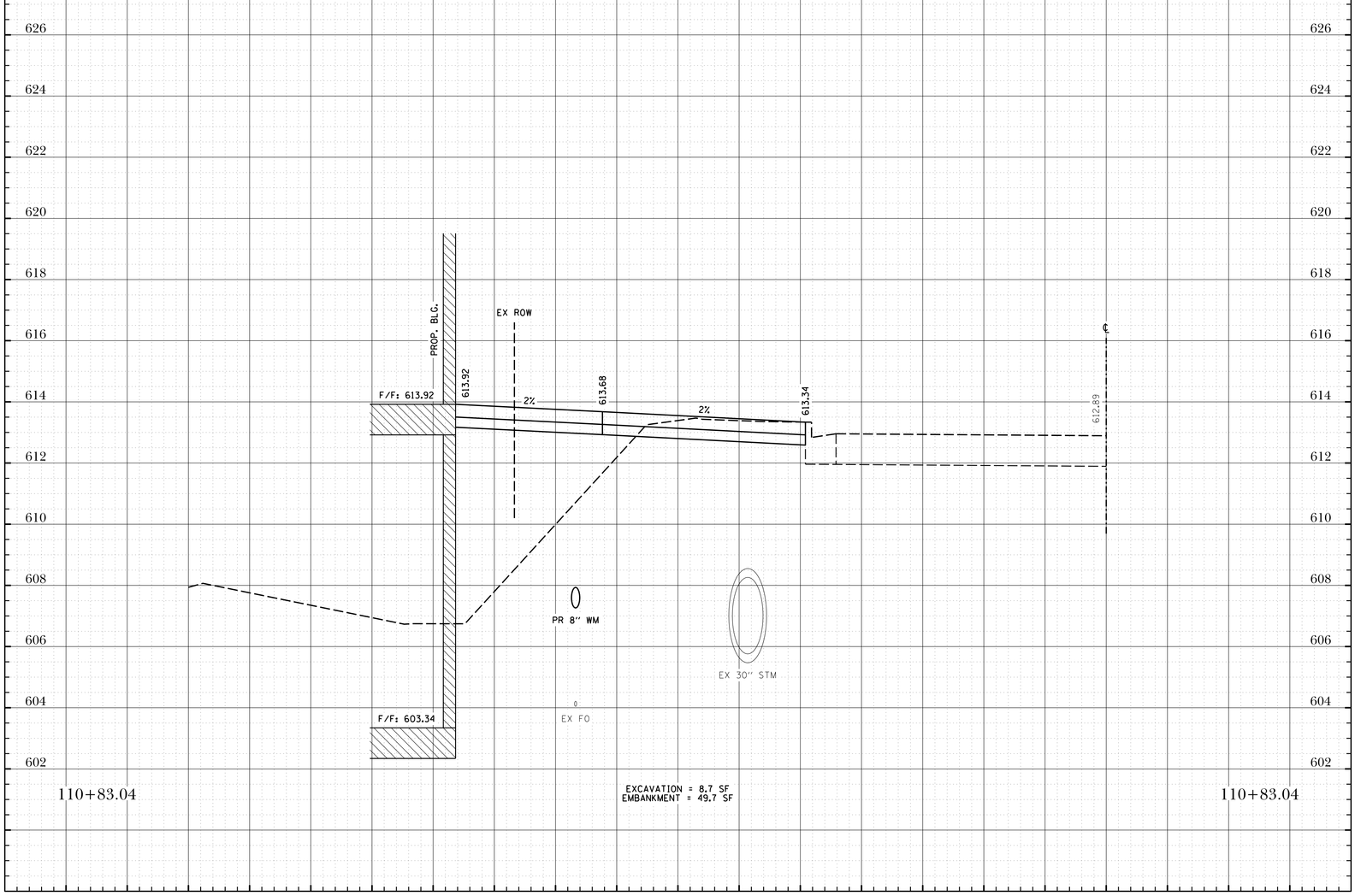

Project No.: SH0002

File Name: YS_MASHINGTON.dgn

Issue Date: 02/21/2019

Scale: HORZ: 1" = 5' VERT: 1" = 2'

Sheet Number 128

The Reserve at Hudson Crossing - Roadway Improvements

Cross Sections - Washington Street

Oswego, Kendall County, Illinois

TROTTER and ASSOCIATES, INC.
ENGINEERS AND SURVEYORS
40W201 Wasco Road, Suite D
St. Charles, IL 60175
Ph.: 630-587-0470 • Fax: 630-587-0475

PROJECT STAFF	ISSUE	REVISIONS	DATE
PROJECT MANAGER:			
ENGINEER:			
ENGINEER:			
ENGINEER:	5.	ISSUED FOR BIDDING	2/21/19
TECHNICIAN:	4.	PER VILLAGE OF OSWEGO, IDOT, FOX METRO	2/15/19
TECHNICIAN:	3.	REVISIONS PER VILLAGE OF OSWEGO REVIEW	1/11/19
	2.	REVISIONS PER VILLAGE OF OSWEGO REVIEW	12/4/18
	1.	REVISIONS PER VILLAGE OF OSWEGO REVIEW	11/21/18