INVITATION TO BID RESERVE AT HUDSON CROSSING PUBLIC IMPROVEMENTS– ADDENDUM #1
March 1, 2019

1. IMPORTANT INSTRUCTIONS TO BIDDERS

   This addendum must be read, signed and dated by the bidder and included with the bid documents submitted by the bidder on or before the bid closing date and time. Failure to include this addendum with the bid documents may result in bid rejection.

   Bidder will carefully note the inclusion of this addendum on the bid form.

2. ATTACHMENTS TO THIS ADDENDUM:

Schedule of Prices – BLR 12200a	4 pages
Index of Special Provision	3 pages
Plan Sheet (48 pages):	
- Sheet No. 1 – Cover Sheet	1 pages
- Sheet No. 4-8 – Summary of Quantities	5 pages
- Sheet No. 16, 18, & 19 – Removal Plans	3 pages
- Sheet No. 22-28 – Roadway Plan and Profile	7 pages
- Sheet No. 29-34 – Grading Plan and Profile	6 pages
- Sheet No. 40-45 – Drainage Plan and Profile	6 pages
- Sheet No. 46 – Erosion Control Plan	1 pages
- Sheet No. 50-55 – Sanitary Plan and Profile	6 pages
- Sheet No. 56-61 – Water Main Plan and Profile	6 pages
- Sheet No. 62-64 – Underground Electrical Plan	3 pages
- Sheet No. 83 – Landscape Plan	1 pages
- Sheet No. 84 – Landscape Details, Notes, and Plant List	1 pages
- Sheet No. 88 – Village of Oswego Standard Details	1 pages
- Sheet No. 91 – Miscellaneous Details	1 pages

3. MODIFICATIONS to PROJECT SPECIFICATIONS:

   1. Schedule of Prices - BLR 12200a - (Pages 5-1 – 5-4)
      A. Revised Schedule (Item, Units, and Quantities). Replace in its entirety.

   2. Index of Special Provisions (Pages 1-3)
      A. Revised and added index titles. Replace in its entirety.

   3. Special Provisions – Fire Hydrant Complete (Pages 21)
      A. Under Basis of Payment section - Removed: "*Water main tee for hydrant lead will be paid for under WATER MAIN TEE of size specified*."

   4. Special Provisions – Sanitary Sewer (Pages 35)

A. Under Construction Methods section: - Removed: "*Sanitary sewers shall be constructed sufficiently deep so as to prevent freezing. For all locations of sanitary sewers placed less than 4 feet deep (to top of pipe), insulation shall be provided as detailed on the plans*."

5. Special Provisions – Grease Interceptor-1500 Gal (Pages 35)
   A. Removed "Construction Requirements:" and "Materials:" sections in their entirety and replace with the following:

      Materials and Construction Requirements:
      The grease interceptor material and installation shall be in accordance with the contract plan drawings and manufacture requirements.

6. Special Provisions – Sanitary Service (Pages 38)
   A. Under Construction Methods section: - Removed: "*Sanitary sewers shall be constructed sufficiently deep so as to prevent freezing. For all locations of sanitary sewers placed less than 4 feet deep (to top of pipe), insulation shall be provided as detailed on the plans*."

7. Special Provisions – Remove & Relocate Sign (Pages 47)
   A. Revised title description to: "*Remove & Relocate Decorative Pole and Signs."*
   B. Removed "Description of Work:", "Method of Measurement:", and "Basis of Payment:" sections in their entirety and replace with the following:

      Description of Work:
      The work under this pay item includes removing and relocating existing decorative pole and signs at locations shown on the contract drawings. The relocations of signs shall be in accordance to Section 724 of the Standard Specifications. New sign supports shall be provided when relocating to new sign pole.

      The new concrete foundation for the relocated poles shall be constructed and installed per the details in the Contract Drawings, and in conformance with Section 836 of the Standard Specifications. Where soil conditions require support to prevent caving in of the shaft sidewall, the contractor shall be responsible for furnishing and installing a full depth form liner at no additional cost.

      Method of Measurement:
      This work shall be measured per Each for REMOVE & RELOCATE DECORATIVE POLE AND SIGNS.

<u>Basis of Payment:</u>
This work shall be paid for at the contract unit price per Each for REMOVE & RELOCATE DECORATIVE POLE AND SIGNS, which shall be payment in full for all labor and materials necessary to complete the work (including pole foundation) according to the contract drawings.

8. Special Provisions – Decorative Sign Pole (Pages 48)
   A. Removed "Method of Measurement:" and "Basis of Payment:" sections in their entirety and replace with the following:

      <u>Method of Measurement:</u>
      This work shall be measured per Each for DECORATIVE SIGN POLE installed.

      <u>Basis of Payment:</u>
      This work shall be paid for at the contract unit price per Each for DECORATIVE SIGN POLE installed, which shall be payment in full for all labor and materials necessary to complete the work (including pole foundation) according to the contract drawings.

9. Special Provisions – Electric Splice Box (Pages 49)

   A. Removed "Method of Measurement:" and "Basis of Payment:" sections in their entirety and replace with the following:

      <u>Method of Measurement:</u>
      This work shall be measured per Each for ELECTRIC SPLICE BOX installed.

      <u>Basis of Payment:</u>
      This work shall be paid for at the contract unit price per Each for ELECTRIC SPLICE BOX installed, which shall be payment in full for all labor and materials necessary to complete the work according to the contract drawings.

10. Special Provisions – Trash Receptacle (Pages 62)

    A. Added "Trash Receptacle" special provision and shall read the following:

       <u>TRASH RECEPTACLE</u>

       <u>Description of Work:</u>

This work shall consist of furnishing and installing a trash receptacle as shown on the contract drawings.

<u>Materials and Construction Requirements:</u>
The trash receptacle material and installation shall be in accordance with the contract plan drawings and manufacture requirements.

<u>Method of Measurement:</u>
This work shall be measured per Each for TRASH RECEPTACLE installed.

<u>Basis of Payment:</u>
This work shall be paid for at the contract unit price per Each for TRASH RECEPTACLE installed, which shall be payment in full for all labor and materials necessary to complete the work according to the contract drawings.

11. Special Provisions – Recycling Receptacle (Pages 62)

A. Added "Recycling Receptacle" special provision and shall read the following:

<u>RECYCLING RECEPTACLE</u>

<u>Description of Work:</u>
This work shall consist of furnishing and installing a recycling receptacle as shown on the contract drawings.

<u>Materials and Construction Requirements:</u>
The recycling receptacle material and installation shall be in accordance with the contract plan drawings and manufacture requirements.

<u>Method of Measurement:</u>
This work shall be measured per Each for RECYCLING RECEPTACLE installed.

<u>Basis of Payment:</u>
This work shall be paid for at the contract unit price per Each for RECYCLING RECEPTACLE installed, which shall be payment in full for all labor and materials necessary to complete the work according to the contract drawings.

12. Special Provisions – Planter (Pages 62)

A. Added "Planter" special provision and shall read the following:

PLANTER

Description of Work:
This work shall consist of furnishing and installing a planter as shown on the contract drawings.

Materials and Construction Requirements:
The planter material and installation shall be in accordance with the contract plan drawings and manufacture requirements.

Method of Measurement:
This work shall be measured per Each for PLANTER installed.

Basis of Payment:
This work shall be paid for at the contract unit price per Each for PLANTER installed, which shall be payment in full for all labor and materials necessary to complete the work according to the contract drawings.

13. Special Provisions – Bench (Pages 62)

A. Added "Bench" special provision and shall read the following:

BENCH

Description of Work:
This work shall consist of furnishing and installing a bench as shown on the contract drawings.

Materials and Construction Requirements:
The bench material and installation shall be in accordance with the contract plan drawings and manufacture requirements.

Method of Measurement:
This work shall be measured per Each for BENCH installed.

Basis of Payment:
This work shall be paid for at the contract unit price per Each for BENCH installed, which shall be payment in full for all labor and materials necessary to complete the work according to the contract drawings.

14. Special Provisions – Bike Rack (Pages 62)

    A. Added "Bike Rack" special provision and shall read the following:

    <u>BIKE RACK</u>

    <u>Description of Work:</u>
    This work shall consist of furnishing and installing a bike rack as shown on the contract drawings.

    <u>Materials and Construction Requirements:</u>
    The bike rack material and installation shall be in accordance with the contract plan drawings and manufacture requirements.

    <u>Method of Measurement:</u>
    This work shall be measured per Each for BIKE RACK installed.

    <u>Basis of Payment:</u>
    This work shall be paid for at the contract unit price per Each for BIKE RACK installed, which shall be payment in full for all labor and materials necessary to complete the work according to the contract drawings.

4. MODIFICATIONS to PROJECT DRAWINGS:

    1. Sheet No. 1 – Cover Sheet
        A. Added Addendum #1 date.

    2. Sheet No. 4 – Summary of Quantities
        A. Removing Manholes – quantity revised from 3 EA to 4 EA.
        B. Changed pay item description "Remove and Relocate Decorative Pole and Signs".
        C. Class D Patch, Special, 3" – quantity revised from 532 SY to 543 SY.
        D. Decorative Sign Pole – revised unit and quantity from 24 FEET to 2 EACH.
        E. Sanitary Manhole, Type A, 4' Diameter, Type 1 Frame, Closed Lid – quantity revised from 13 EA to 12 EA.
        F. Added "Sanitary Drop Manhole, Type A, 4' Diameter, Type 1 Frame, Closed Lid" (1 EA).
        G. Precast Concrete Transformer Pad – quantity revised from 2 EACH to 4 EACH.
        H. Connection to Utility Pole – quantity revised from 5 EA to 7 EA.

I. Electric Cable in Conduit, 500 CU – 400 Amp Secondary Cable – quantity revised from 85 FT to 100 FT.
J. Underground Conduit, PVC, 4" Dia – quantity revised from 73 LF to 467 LF.
K. Underground Conduit, PVC, 6" Dia – quantity revised from 1,948 FT to 2,073 FT.
L. Removed "Trench Backfill" from Lighting (60 CY).
M. Added "Trash Receptacle" (13 EA) to Landscaping.
N. Added "Recycling Receptacle" (2 EA) to Landscaping.
O. Added "Planter" (27 EA) to Landscaping.
P. Added "Bench" (16 EA) to Landscaping.
Q. Added "Bike Rack" (2 EA) to Landscaping.
R. Topsoil Furnish and Place, 4" – quantity revised from 3,829 SY to 3,824 SY.
S. Seeding, Class 1A – quantity revised from 0.489 ACRE to 0.486 ACRE.
T. Temporary Erosion Control Blanket – quantity revised from 2,358 SY to 2,353 SY.
U. Added "Trash Receptacle" (2 EA) to Alternate 2.
V. Added "Recycling Receptacle" (2 EA) to Alternate 2.
W. Added "Bike Rack" (2 EA) to Alternate 2.

3. Sheet No. 5 – Schedule of Quantities
   A. Revised Schedule: Manhole Removal.

4. Sheet No. 6 – Schedule of Quantities
   A. Revised Schedule: Class D Patch, Special, 3".

5. Sheet No. 7 – Schedule of Quantities
   A. Revised Schedule: 4" Topsoil, Seeding Cl 1A, and Erosion Control Blanket.

6. Sheet No. 8 – Schedule of Quantities
   A. Removed SNMH-2 from Schedule: Sanitary Manhole, Type A-1-C, 4' Dia, revised total quantity to 12.
   B. Added SNMH-2 to Schedule: Sanitary Drop Manhole, Type A-1-C, 4' Dia.
   C. Revised Schedule: Precast Concrete Transformer Pad.
   D. Revised Schedule: Electric Cable in Conduit, 500 CU – 400 Amp Secondary Cable.
   E. Revised Schedule: Underground Conduit, PVC, 4" Dia.
   F. Revised Schedule: Underground Conduit, PVC, 6" Dia.
   G. Revised Schedule: Connection to Utility Pole.

7. Sheet No. 16 – Removal Plan – Harrison Street
   A. Changed callout "Remove and Relocate Decorative Pole and Signs".

8. Sheet No. 18-19 – Removal Plan – Adams Street

A. Changed callout "Remove and Relocate Decorative Pole and Signs".

9. Sheet No. 22-28 – Roadway Plan and Profile
   A. Revised approximate bedrock profile.

10. Sheet No. 23– Roadway Plan and Profile
    A. Added 2 Precast Concrete Transformer Pads.
    B. Relocated 2 Precast Concrete Transformer Pads.

11. Sheet No. 29– Grading Plan and Profile
    A. Added 2 Precast Concrete Transformer Pads.
    B. Relocated 2 Precast Concrete Transformer Pads.

12. Sheet No. 29-34 – Grading Plan and Profile
    A. Revised approximate bedrock profile.

13. Sheet No. 40-45 – Drainage Plan and Profile
    A. Revised approximate bedrock profile.

14. Sheet No. 46 – Erosion Control Plan – Harrison Street
    A. 4" Topsoil, Seeding (Cl 1) and Erosion Control Blanket quantity revised from 342 SY to 337 SY per new transformer pads.

15. Sheet No. 50 – Sanitary Sewer Plan and Profile
    A. Revised approximate bedrock profile.
    B. Added additional information at Pump Station including existing buildings, abandoned tank.
    C. Added Note 2 re: abandonment of existing sanitary sewer.
    D. Added Note 3 re: removal of existing tank as necessary for construction of proposed sewer.
    E. Revised existing sewer sizes from 24" to 18".
    F. Added Sanitary Manhole to be removed at 3+83.55, 22.62' LT.
    G. Added note to abandon existing sewer between 8' dia manhole and manhole to be removed.
    H. Added callouts for plugging of existing sewer to be abandoned.
    I. Added callouts for abandonment of sewer to be included in contract.
    J. Added Class D Patch, Special, 3" at manhole to be removed.
    K. Revised proposed 12" sewer invert at connection to existing manhole to elevation 588.14
    L. Revised slope of proposed 12" sewer (SN-1) to 3.49%.

16. Sheet No. 51 – Sanitary Sewer Plan and Profile
    A. Revised approximate bedrock profile.
    B. Revised SNMH-2 to Sanitary DROP Manhole, Type A-1-C.
    C. Added notes re: monolithic drop connection required, and provided proposed drop invert elevation.

17. Sheet No. 52 – Sanitary Sewer Plan and Profile
    A. Revised approximate bedrock profile.
    B. Removed Legend showing proposed pipe insulation.
    C. Added notes re: 6" PVC (SE): 602.51 at SNMH-3 and installation of vertical 45-degree bends outside manhole to make connection to manhole at invert: 593.89.
    D. Revised Utility Crossing #34 per revision to underground electric location.
    E. Added rim elevation to proposed cleanout at 14+29.47, 34.97' LT.

18. Sheet No. 53-55 – Sanitary Sewer Plan and Profile
    A. Revised approximate bedrock profile.

19. Sheet No. 56-61 – Water Main Plan and Profile
    A. Revised approximate bedrock profile.

20. Sheet No. 57 – Water Main Plan and Profile
    A. Revised Utility Crossing #55 per revision to underground electric location.

21. Sheet No. 62 – Underground Electrical Plan- Harrison Street
    A. Added proposed utility pole to be installed by Comed at 11+68.93, 74.13' LT.
    B. Underground Conduit, 6" SCH 40 PVC quantity revised from 346 LF to 388 LF.
    C. Relocated Precast Concrete Transformer Pad from 11+20.09, 35.50' RT to 11+15.67, 35.50' RT.
    D. Added Precast Concrete Transformer Pad at 11+23.67, 35.50' RT.
    E. Underground Conduit, 6" SCH 40 PVC quantity revised from 198 LF to 193 LF.
    F. Added Underground Conduit, 6" SCH 40 PVC (8 LF).
    G. Underground Conduit, 6" SCH 40 PVC quantity revised from 303 LF to 297 LF.
    H. Added Precast Concrete Transformer Pad at 14+17.57, 25.00' RT.
    I. Relocated Precast Concrete Transformer Pad from 14+17.57, 23.49' RT TO 14+25.57, 25.00' RT.
    J. Added Underground Conduit, 6" SCH 40 PVC (8 LF).
    K. Underground Conduit, 4" SCH 40 PVC quantity revised from 73 LF to 88 LF.
    L. 500 cu – 400 Amp Secondary Cable quantity revised from 85 LF to 100 LF.

22. Sheet No. 63 – Underground Electrical Plan- Jackson Street
    A. Added Connection to Utility Pole at 23+46.6, 3475' RT for AT&T.

23. Sheet No. 64 – Underground Electrical Plan- Adams Street
    A. Revised connection to utility pole to 111+11.28, 101.83' RT.
    B. Underground Conduit, 6" SCH 40 PVC revised quantity from 397 LF to 467 LF.
    C. Relocated conduit from east side to west side of Adams Street.
    D. Underground Conduit, 6" SCH 40 PVC revised quantity from 347 LF to 355 LF.
    E. Added Underground Conduit, 4" SCH 40 PVC (382 LF) for AT&T.

24. Sheet No. 83 – Landscape Plan
    A. Added Note # re: final location of all landscape items to be coordinated with Village of Oswego.
    B. Added Bike Rack symbol to legend and plan.

25. Sheet No. 84 – Landscape Details, Notes, and Plant List
    A. Schedules Added: Trash Receptacle, Recycling Receptacle, Planter, Bench, and Bike Rack.
    B. Details Added: Recycling Receptacle and Planter.

26. Sheet No. 88 – Village of Oswego Standard Details
    A. Added Decorative Pole and Sign detail.

27. Sheet No. 91 – Miscellaneous Details
    A. Removed Pipe Insulation detail.
    B. Added Cast Iron Cleanout Enclosure detail.
    C. Revised Sanitary Cleanout detail to reference Cast Iron Cleanout Enclosure detail for lid embedded in concrete collar.

5. ACKNOWLEDGMENT

   The Bidder acknowledges receipt of this Addendum and understands its content to the Bid Documents.

6. SIGNATURE AND DATE

Authorized Signature Date

RETURN WITH BID

Illinois Department of Transportation

SCHEDULE OF PRICES

County Kendall
Local Public Agency Village of Oswego
Section 18-00053-00-FP
Route N/A

Schedule for Multiple Bids

Combination Letter		Sections Included in Combinations	Total

Schedule for Single Bid

(For complete information covering these items, see plans and specifications)

Bidder's Proposal for making Entire Improvements				

SP	Item No.	Items	Unit	Quantity	Unit Price	Total
		BASE BID				
	20100110	TREE REMOVAL (6 TO 15 UNITS DIAMETER)	UNIT	197		
	20100210	TREE REMOVAL (OVER 15 UNITS DIAMETER)	UNIT	344		
	44000100	PAVEMENT REMOVAL	SQ YD	7,055		
	44000200	DRIVEWAY PAVEMENT REMOVAL	SQ YD	81		
	44000300	CURB REMOVAL	FOOT	31		
	44000500	COMBINATION CURB AND GUTTER REMOVAL	FOOT	1,997		
	44000600	SIDEWALK REMOVAL	SQ FT	5,559		
	55100300	STORM SEWER REMOVAL 8"	FOOT	58		
	55100500	STORM SEWER REMOVAL 12"	FOOT	604		
	55100700	STORM SEWER REMOVAL 15"	FOOT	370		
	55101200	STORM SEWER REMOVAL 24"	FOOT	37		
	60500040	REMOVING MANHOLES	EACH	4		
	60500050	REMOVING CATCH BASINS	EACH	7		
	60500060	REMOVING INLETS	EACH	2		
	72400100	REMOVE SIGN PANEL ASSEMBLY - TYPE A	EACH	12		
*	X0120014	WATER MAIN ABANDONMENT	EACH	3		
*	X0322936	REMOVE EXISTING FLARED END SECTION	EACH	3		
*	X0326864	BRICK SIDEWALK REMOVAL	SQ FT	2,635		
*	X0840000	SANITARY SEWER REMOVAL 8"	FOOT	343		
*	X6026622	VALVE VAULTS TO BE REMOVED	EACH	5		
*	Z0022800	FENCE REMOVAL	FOOT	266		
*		FIRE HYDRANT TO BE REMOVED	EACH	3		
*		REMOVE AND RELOCATE DECORATIVE POLE AND SIGNS	EACH	4		
*		ABANDON AND FILL EXISTING STORM SEWER	FOOT	45		
	20200100	EARTH EXCAVATION	CU YD	2,042		
	20201200	REMOVAL AND DISPOSAL OF UNSUITABLE MATERIAL	CU YD	3,012		
*	20400800	FURNISHED EXCAVATION	CU YD	4,336		
	20700220	POROUS GRANULAR EMBANKMENT	CU YD	6,900		
*	21001000	GEOTECHNICAL FABRIC FOR GROUND STABILIZATION	SQ YD	7,491		
	21301048	EXPLORATION TRENCH 48" DEPTH	FOOT	100		
	35101500	AGGREGATE BASE COURSE, TYPE B	CU YD	1,103		
	35501308	HOT-MIX ASPHALT BASE COURSE, 6"	SQ YD	6,391		
	40600275	BITUMINOUS MATERIALS (PRIME COAT)	POUND	14,380		
	40600290	BITUMINOUS MATERIALS (TACK COAT)	POUND	2,876		
	40603085	HOT-MIX ASPHALT BINDER COURSE, IL-19.0, N50	TON	1,432		
	40603340	HOT-MIX ASPHALT SURFACE COURSE, MIX "D", N50	TON	895		
	42000201	PORTLAND CEMENT CONCRETE PAVEMENT 7" (JOINTED)	SQ YD	228		
	42300400	PORTLAND CEMENT CONCRETE DRIVEWAY PAVEMENT, 8 INCH	SQ YD	74		
	42400200	PORTLAND CEMENT CONCRETE SIDEWALK 5 INCH	SQ FT	19,768		
	42400800	DETECTABLE WARNINGS	SQ FT	308		
	60603800	COMBINATION CONCRETE CURB AND GUTTER, TYPE B-6.12	FOOT	4,030		
	60605000	COMBINATION CONCRETE CURB AND GUTTER, TYPE B-6.24	FOOT	189		
	72000100	SIGN PANEL - TYPE 1	SQ FT	60		
	72800100	TELESCOPING STEEL SIGN SUPPORT	FOOT	150		
	78008200	POLYUREA PAVEMENT MARKING TYPE I - LETTERS AND SYMBOLS	SQ FT	86		
	78008210	POLYUREA PAVEMENT MARKING TYPE I - LINE 4"	FOOT	2,689		
	78008270	POLYUREA PAVEMENT MARKING TYPE I - LINE 24"	FOOT	91		
*	X0326863	BRICK SIDEWALK	SQ FT	4,003		

RETURN WITH BID

	Bidder's Proposal for making Entire Improvements					

SP	Item No.	Items	Unit	Quantity	Unit Price	Total
*	Z0004510	HOT-MIX ASPHALT DRIVEWAY PAVEMENT, 3"	SQ YD	87		
*		REINSTALL SALVAGED BRICK SIDEWALK	SQ FT	415		
*		BRICK PAVEMENT	SQ YD	191		
*		CLASS D PATCH, SPECIAL, 3"	SQ YD	543		
*		CLASS D PATCH, SPECIAL, 12.5"	SQ YD	204		
*		HOT-MIX ASPHALT BIKE PATH	SQ YD	91		
*		DECORATIVE SIGN POLE	EACH	2		
*		SANITARY MANHOLE, TYPE A, 4' DIAMETER, TYPE 1 FRAME, CLOSED LID	EACH	12		
*		SANITARY MANHOLE, TYPE C, 4' DIAMETER, TYPE 1 FRAME, CLOSED LID	EACH	1		
*		SANITARY DROP MANHOLE, TYPE A, 4' DIAMETER, TYPE 1 FRAME, CLOSED LID	EACH	1		
*		SANITARY SEWER, PVC, SDR-26, 8"	FOOT	42		
*		SANITARY SEWER, PVC, SDR-26, 10"	FOOT	662		
*		SANITARY SEWER, PVC, SDR-26, 12"	FOOT	1,348		
*		STEEL CASING, JACK AND BORE, 30"	FOOT	105		
*		GREASE INTERCEPTOR - 1,500 GALLON	EACH	1		
*		SANITARY SERVICE, PVC, 6"	FOOT	92		
	54213657	PRECAST REINFORCED CONCRETE FLARED END SECTIONS 12"	EACH	1		
	54213663	PRECAST REINFORCED CONCRETE FLARED END SECTIONS 18"	EACH	1		
	54213669	PRECAST REINFORCED CONCRETE FLARED END SECTIONS 24"	EACH	1		
	60200205	CATCH BASINS, TYPE A, 4'-DIAMETER, TYPE 1 FRAME, CLOSED LID	EACH	2		
	60200805	CATCH BASINS, TYPE A, 4'-DIAMETER, TYPE 8 GRATE	EACH	2		
	60201005	CATCH BASINS, TYPE A, 4'-DIAMETER, TYPE 10 FRAME AND GRATE	EACH	4		
	60201105	CATCH BASINS, TYPE A, 4'-DIAMETER, TYPE 11 FRAME AND GRATE	EACH	9		
	60207605	CATCH BASINS, TYPE C, TYPE 8 GRATE	EACH	1		
	60207805	CATCH BASINS, TYPE C, TYPE 10 FRAME AND GRATE	EACH	4		
	60207905	CATCH BASINS, TYPE C, TYPE 11 FRAME AND GRATE	EACH	5		
	60218400	MANHOLES, TYPE A, 4'-DIAMETER, TYPE 1 FRAME, CLOSED LID	EACH	6		
	550A0050	STORM SEWERS, CLASS A, TYPE 1 12"	FOOT	190		
	550A0070	STORM SEWERS, CLASS A, TYPE 1 15"	FOOT	68		
	550A0340	STORM SEWERS, CLASS A, TYPE 2 12"	FOOT	655		
	550A0360	STORM SEWERS, CLASS A, TYPE 2 15"	FOOT	121		
	550A0380	STORM SEWERS, CLASS A, TYPE 2 18"	FOOT	196		
	550A0400	STORM SEWERS, CLASS A, TYPE 2 21"	FOOT	191		
	550A0410	STORM SEWERS, CLASS A, TYPE 2 24"	FOOT	153		
	550B0340	STORM SEWERS, CLASS B, TYPE 2 12"	FOOT	18		
*		TRENCH DRAIN - PATIO	FOOT	42		
*		TRENCH DRAIN - PAVEMENT	FOOT	20		
*	X5630706	CONNECTION TO EXISTING WATER MAIN 6"	EACH	1		
*	X5630710	CONNECTION TO EXISTING WATER MAIN 10"	EACH	2		
*	X5640175	FIRE HYDRANT COMPLETE	EACH	7		
*	Z0067700	STEEL CASINGS 20"	FOOT	196		
*	Z0067900	STEEL CASINGS 30"	FOOT	21		
*		WATER MAIN, 8", DUCTILE IRON	FOOT	320		
*		WATER MAIN, 10", DUCTILE IRON	FOOT	1,520		
*		ADJUSTING WATER MAIN, SPECIAL, 12"	FOOT	36		
*		WATER SERVICE LINE, SPECIAL, 1"	FOOT	90		
*		VALVE VAULT, TYPE A, 5'-DIAMETER, TYPE 1 FRAME, CLOSED LID, 8" GATE VALVE	EACH	1		
*		VALVE VAULT, TYPE A, 5'-DIAMETER, TYPE 1 FRAME, CLOSED LID, 10" GATE VALVE	EACH	6		
*		VALVE VAULT, TYPE A, 5'-DIAMETER, TYPE 1 FRAME, CLOSED LID, 12" GATE VALVE	EACH	1		
*		VALVE BOX, 10" GATE VALVE	EACH	2		
*		PRECAST CONCRETE TRANSFORMER PAD	EACH	4		
*		PRECAST CONCRETE SWITCHGEAR PAD	EACH	1		
*		ELECTRIC SPLICE BOX	EACH	1		
*		CONNECTION TO UTILITY POLE	EACH	7		
*		ELECTRIC CABLE IN CONDUIT, 500 CU - 400 AMP SECONDARY CABLE	FOOT	100		
*	81028390	UNDERGROUND CONDUIT, PVC, 4" DIA	FOOT	467		
*	81028410	UNDERGROUND CONDUIT, PVC, 6" DIA	FOOT	2,073		
	81028210	UNDERGROUND CONDUIT, GALVANIZED STEEL, 2 1/2" DIA.	FOOT	300		
	81028240	UNDERGROUND CONDUIT, GALVANIZED STEEL, 4" DIA.	FOOT	110		
	81028710	UNDERGROUND CONDUIT, COILABLE NONMETALLIC CONDUIT, 3/4" DIA.	FOOT	350		
	81028730	UNDERGROUND CONDUIT, COILABLE NONMETALLIC CONDUIT, 1 1/4" DIA.	FOOT	4,000		
	81028740	UNDERGROUND CONDUIT, COILABLE NONMETALLIC CONDUIT, 1 1/2" DIA.	FOOT	700		
	81028750	UNDERGROUND CONDUIT, COILABLE NONMETALLIC CONDUIT, 2" DIA.	FOOT	525		
	81028790	UNDERGROUND CONDUIT, COILABLE NONMETALLIC CONDUIT, 4" DIA.	FOOT	100		
	83600200	LIGHT POLE FOUNDATION, 24" DIAMETER	FOOT	350		
	84200500	REMOVAL OF LIGHTING UNIT, SALVAGE	EACH	17		
	84200804	REMOVAL OF POLE FOUNDATION	EACH	11		
*	84500110	REMOVAL OF LIGHTING CONTROLLER	EACH	1		

RETURN WITH BID

Bidder's Proposal for making Entire Improvements				

SP	Item No.	Items	Unit	Quantity	Unit Price	Total
*	84500120	REMOVAL OF ELECTRIC SERVICE INSTALLATION	EACH	1		
*	84500130	REMOVAL OF LIGHTING CONTROLLER FOUNDATION	EACH	1		
*	89502380	REMOVE EXISTING HANDHOLE	EACH	1		
*	X0325815	REMOVE EXISTING CABLE	FOOT	1,000		
*	X1200139	REMOVAL OF LIGHTING LUMINAIRE, SALVAGE	EACH	2		
*	X8140230	HANDHOLE, COMPOSITE CONCRETE (SPECIAL)	EACH	10		
*	X8360215	LIGHT POLE FOUNDATION, 24" DIAMETER, OFFSET	FOOT	60		
*	XX008195	EXPLORATION EXCAVATION (UTILITY)	FOOT	120		
*	Z0033028	MAINTENANCE OF LIGHTING SYSTEM	CAL MO	9		
	21101615	TOPSOIL FURNISH AND PLACE, 4"	SQ YD	3,824		
	25000110	SEEDING, CLASS 1A	ACRE	0.486		
	25000314	SEEDING, CLASS 4B	ACRE	0.304		
	25200110	SODDING, SALT TOLERANT	SQ YD	2,814		
	28000400	PERIMETER EROSION BARRIER	FOOT	1,787		
	28000510	INLET FILTERS	EACH	32		
	28001100	TEMPORARY EROSION CONTROL BLANKET	SQ YD	2,353		
		TREE, ACER SACCHARUM 'CRESCENDO' (CRESCENDO SUGAR MAPLE), 3" CALIPER, BALLED AND BURLAPPED	EACH	2		
*		TREE, GINKGO BILOBA 'AUTUMN GOLD' (AUTUMN GOLD GINKGO), 3" CALIPER, BALLED AND BURLAPPED	EACH	4		
*		TREE, GYMNOCLADUS DIOICUS 'ESPRESSO' (ESPRESSO KENTUCKY COFFEE TREE), 4" CALIPER, BALLED AND BURLAPPED	EACH	2		
*		TREE, PLATANUS ACERIFOLIA 'MORTON CIRCLE' (EXCLAMATION LONDON PLANETREE), 3" CALIPER, TREE FORM, BALLED AND BURLAPPED	EACH	3		
*		TREE, TILIA CORDATA 'GREENSPIRE' (GREENSPIRE LINDEN), 3" CALIPER, BALLED AND BURLAPPED	EACH	2		
*		TREE, HEPTACODIUM MICNOIDES (SEVEN SON FLOWER), 8' HEIGHT, CLUMP FORM, BALLED AND BURLAPPED	EACH	4		
*		TREE, OSTRYA VIRGINIANA (AMERICAN HOPHORNBEAM), 3" CALIPER, BALLED AND BURLAPPED	EACH	5		
*		EVERGREEN, TAXUS X MEDIA 'TAUNTONII' (TAUNTON YEW), 24", BALLED AND BURLAPPED	EACH	21		
*		SHRUB, CORNUS STOLONIFERA 'ARCTIC FIRE' (ARCTIC FIRE DOGWOOD), CONTAINER GROWN, 7-GALLON	EACH	7		
*		SHRUB, DIERVILLA LONICERA (DWARF BUSH HONEY SUCKLE), 5-GALLON	EACH	30		
*		SHRUB, FOTHERGILLA GARDENII (DWARF FOTHERGILLA), 3-GALLON	EACH	5		
*		SHRUB, HYDRANGEA ARBORESCENS 'INCREDIBALL' (INCREDIBALL HYDRANGEA), 5-GALLON	EACH	21		
*		SHRUB, SYRINGA PATULA 'MISS KIM' (MISS KIM LILAC), 3' HEIGHT, BALLED AND BURLAPPED	EACH	7		
*		SHRUB, VIBURNUM PRUNIFOLIUM (BLACKHAW VIBURNUM), 5' HEIGHT, BALLED AND BURLAPPED	EACH	3		
*		SHRUB, VIBURNUM DENTATUM (ARROWWOOD VIBURNUM), 4' HEIGHT, BALLED AND BURLAPPED	EACH	15		
*		PERENNIAL PLANTS, ALLIUM 'SUMMER BEAUTY' (SUMMER BEAUTY ONION), 1-GALLON	EACH	51		
*		PERENNIAL PLANTS, CALAMAGROSTIS X ACUTIFLORA 'KARL FORESTER' (FEATHER REED GRASS), 3-GALLON	EACH	6		
*		PERENNIAL PLANTS, CHASMANTHIUM LATIFOLIUM (NORTHERN SEA OATS), 1-GALLON	EACH	83		
*		PERENNIAL PLANTS, CAREX MUSKINGUMENSIS 'OEHME' (OEHME PALM SEDGE), 1-GALLON	EACH	31		
*		PERENNIAL PLANTS, HEMEROCALIS 'HAPPY RETURNS' (HAPPY RETURNS DAYLILY), 1-GALLON	EACH	166		
*		PERENNIAL PLANTS, PANICUM VIRGATUM 'HEAVY METAL' (HEAVY METAL SWITCHGRASS), 3-GALLON	EACH	18		
*		PERENNIAL PLANTS, SESLERIA AUTUMNALIS (AUTUMN MORE GRASS), 1-GALLON	EACH	128		
*		PERENNIAL PLANTS, SPOROBOLUS HETEROLEPIS (PRAIRIE DROPSEED), 1-GALLON	EACH	12		
*		MULCH PLACEMENT 3"	SQ YD	1,013		
*		TRASH RECEPTACLE	EACH	13		
*		RECYCLING RECEPTACLE	EACH	2		
*		PLANTER	EACH	27		
*		BENCH	EACH	16		
*		BIKE RACK	EACH	2		
	50901760	PIPE HANDRAIL	FOOT	284		
	67100100	MOBILIZATION	L SUM	1		

RETURN WITH BID

Bidder's Proposal for making Entire Improvements				

SP	Item No.	Items	Unit	Quantity	Unit Price	Total
*		REMOVE AND RESET MAILBOX	EACH	2		
*		STREET LIGHT TO BE PAINTED	EACH	4		
*		PORTLAND CEMENT CONCRETE STEPS	CU YD	5		
*		ORNAMENTAL FENCE	FOOT	112		
*		STONE FENCE COLUMN	EACH	4		
*		STONE ARCH COLUMN	EACH	2		
*		INTEGRAL BARRIER WALL AND SIDEWALK	SQ FT	686		
*		SEGMENTAL CONCRETE BLOCK RETAINING WALL	SQ FT	936		
*		BOLLARD	EACH	4		
*		TRAFFIC CONTROL AND PROTECTION, SPECIAL	L SUM	1		
		RAILROAD PROTECTIVE LIABILITY INSURANCE	L SUM	1		
		ALTERNATE 1 - LIGHTING CABLE AND FIXTURES				
	81702110	ELECTRIC CABLE IN CONDUIT, 600V (XLP-TYPE USE) 1/C NO. 10	FOOT	3,850		
	81702120	ELECTRIC CABLE IN CONDUIT, 600V (XLP-TYPE USE) 1/C NO. 8	FOOT	4,200		
	81702130	ELECTRIC CABLE IN CONDUIT, 600V (XLP-TYPE USE) 1/C NO. 6	FOOT	15,150		
	81702140	ELECTRIC CABLE IN CONDUIT, 600V (XLP-TYPE USE) 1/C NO. 4	FOOT	2,750		
	81702180	ELECTRIC CABLE IN CONDUIT, 600V (XLP-TYPE USE) 1/C NO. 3/0	FOOT	630		
	82500370	LIGHTING CONTROLLER, BASE MOUNTED, 240 VOLT, 200 AMP	EACH	2		
*	X0324058	OUTLET SPECIAL	EACH	3		
*	X0326498	GFCI 20 AMP DUPLEX RECEPTACLE	EACH	4		
*	X0327141	LIGHTING STANDARD, TYPE 1	EACH	29		
*	X0327142	LIGHTING STANDARD, TYPE 2	EACH	6		
*	X1400238	LUMINAIRE, LED, SPECIAL	EACH	37		
		ALTERNATE 2 - HUDSON CROSSING PARK				
*	Z0022800	FENCE REMOVAL	FOOT	103		
*		COLUMN REMOVAL	EACH	8		
	42400800	DETECTABLE WARNINGS	SQ FT	156		
*	X0326864	BRICK SIDEWALK (PARK)	SQ FT	3,980		
*		REINSTALL SALVAGED BRICK SIDEWALK	SQ FT	824		
*	84400105	RELOCATE EXISTING LIGHTING UNIT	EACH	3		
*		TREE, TAXODIUM DISTICHUM (BALD CYPRESS), 4" CALIPER, BALLED AND BURLAPPED	EACH	2		
*		TREE, CERCIDIPHYLLYM JAPONICUM (KATSURA TREE), 3" CALIPER, BALLED AND BURLAPPED	EACH	4		
*		SHRUB, ILEX GLABRA 'SHAMROCK (SHAMROCK INKBERRY), 18" HEIGHT, BALLED AND BURLAPPED	EACH	8		
*		MULCH PLACEMENT 3"	SQ YD	37		
*		TRASH RECEPTACLE	EACH	2		
*		RECYCLING RECEPTACLE	EACH	2		
*		BIKE RACK	EACH	2		
	50901760	PIPE HANDRAIL	FOOT	188		
*		ORNAMENTAL FENCE	FOOT	112		
*		STONE FENCE COLUMN	EACH	4		
*		STONE ARCH COLUMN	EACH	2		
*		INTEGRAL BARRIER WALL AND SIDEWALK	SQ FT	686		
*		SEGMENTAL CONCRETE BLOCK RETAINING WALL	SQ FT	158		

	TOTAL
BASE BID	
ALTERNATE 1 - LIGHTING CABLE AND FIXTURES	
ALTERNATE 2 - HUDSON CROSSING PARK	

VILLAGE OF OSWEGO

THE RESERVE AT HUDSON CROSSING – ROADWAY IMPROVEMENTS

INDEX OF SPECIAL PROVISIONS

SECTION 18-00053-00-FP

PROJECT SPECIAL PROVISIONS 5
DESCRIPTION OF WORK 5
LOCATION OF WORK 5
COMPLETION DATE 5
CONSTRUCTION SEQUENCE 5
WORK HOURS 5
CHANGE OF QUANTITIES 6
APPLICATION FOR PAYMENT 6
PREVAILING WAGE REQUIREMENTS 6
PROTECTION AND RESTORATION OF PROPERTY 7
CONSTRUCTION ACCESS, NOTIFICATIONS, PHASING 7
ILLINOIS DEPARTMENT OF TRANSPORTATION PERMIT 8
WORK WITHIN FLOODPLAIN AND FLOODWAY 8
BENCHMARKS 8
MAINTAINING ACCESS TO HUDSON CROSSING PARK 8
MAINTENANCE OF ROADWAYS 8
STREET SWEEPING & PREPARATION 8
SAW CUTTING 9
TRENCH BACKFILL 9
ROCK EXCAVATION 9
FURNISHED EXCAVATION 9
PORTLAND CEMENT CONCRETE CURING AND PROTECTION 10
CONNECTION TO EXISTING UTILITY STRUCTURES, EXCLUDING WATER MAIN 10
SEWER LINE STUBS 10
RAILROAD PROTECTIVE LIABILITY INSURANCE 10
HYDROSTATIC TESTS AND DISINFECTION OF THE WATER MAIN 11

WATER MAIN ABANDONMENT 12
REMOVE EXISTING FLARED END SECTION 13
BRICK SIDEWALK REMOVAL 14
REINSTALL SALVAGED BRICK SIDEWALK 14
BRICK PAVEMENT 15
BRICK SIDEWALK 15
POLYUREA PAVEMENT MARKINGS 16
SANITARY SEWER REMOVAL 16
SANITARY SEWER, JACK AND BORE 16
CONNECTION TO EXISTING WATER MAIN 19
TYPE 1 FRAMES WITH CLOSED LIDS (FOR STORM SEWER MANHOLES, SANITARY SEWER MANHOLES AND VALVE VAULTS) 20
FIRE HYDRANT COMPLETE 20
VALVE VAULTS TO BE REMOVED 21
HOT-MIX ASPHALT DRIVEWAY PAVEMENT 22
FENCE REMOVAL 22
COLUMN REMOVAL 23
ORNAMENTAL FENCE 23
STONE FENCE COLUMN 24
STONE ARCH COLUMN 24
STEEL CASINGS 25
WATER MAIN 26
ADJUSTING WATER MAIN, SPECIAL 27
WATER SERVICE LINE, SPECIAL 28
VALVE VAULT 29
VALVE BOX 30
FIRE HYDRANT TO BE REMOVED 30
REMOVE & RESET MAILBOX 31
STREET LIGHT TO BE PAINTED 31
SANITARY SEWER 32
GREASE INTERCEPTOR – 1500 GAL 35
SANITARY SERVICE 35
TRENCH DRAIN - PATIO 38
TRENCH DRAIN - PAVEMENT 39
PORTLAND CEMENT CONCRETE STEPS 39

INTERGRAL BARRIER WALL AND SIDEWALK 41
SEGMENTAL CONCRETE BLOCK RETAINING WALL 42
ABANDON AND FILL EXISTING STORM SEWER 45
CLASS “D” PATCH, SPECIAL 45
HOT-MIX ASPHALT BIKE PATH 46
BOLLARD 47
REMOVE & RELOCATE DECORATIVE POLE AND SIGNS 47
DECORATIVE SIGN POLE 48
PRECAST CONCRET TRANSFORMER PAD 48
PRECAST CONCRETE SWITCHGEAR PAD 49
ELECTRIC SPLICE BOX 49
CONNECTION TO EXISTING UTILITY POLE 49
TRAFFIC CONTROL AND PROTECTION, SPECIAL 50
EXPLORATION EXCAVATION (UTILITY) 52
GFCI, 20 AMP, DUPLEX RECEPTACLE 52
OUTLET SPECIAL 53
HANDHOLE, COMPOSITE CONCRETE (SPECIAL) 54
LIGHT POLE FOUNDATION, 24” DIAMETER, OFFSET 54
LIGHTING STANDARD, TYPE 1 55
LIGHTING STANDARD, TYPE 2 55
LUMINAIRE, LED, SPECIAL 56
MAINTENANCE OF LIGHTING SYSTEM 56
RELOCATE EXISTING LIGHTING UNIT 59
REMOVE EXISTING CABLE 60
REMOVAL OF LIGHTING CONTROLLER FOUNDATION 61
REMOVAL OF LIGHTING CONTROLLER 61
REMOVAL OF ELECTRIC SERVICE INSTALLATION 62
REMOVAL OF LIGHTING LUMINAIRE, SALVAGE 62
TRASH RECEPTACLE 63
RECYCLING RECEPTACLE 63
PLANTER 63
BENCH 64
BIKE RACK 64

Engineering Plans
for
the Village of Oswego

The Reserve at Hudson Crossing - Roadway Improvements

Located in Section 17, Township 37 North, Range 8 East
Oswego, Kendall County, Illinois

Index of Sheets

SHEET NO.	DESCRIPTION
1	COVER SHEET
2-3	GENERAL NOTES AND LEGEND
4	SUMMARY OF QUANTITIES
5-9	SCHEDULE OF QUANTITIES
10-12	TYPICAL SECTIONS
13	ALIGNMENTS, TIES AND BENCHMARKS
14	OVERALL SITE PLAN
15-21	REMOVAL PLANS
22-28	ROADWAY PLAN AND PROFILES
29-34	GRADING PLAN AND PROFILES
35-36	INTERSECTION GRADING PLANS
37	COMPENSATORY STORAGE GRADING PLAN
38-39	DETOUR PLANS
40-45	DRAINAGE PLAN AND PROFILES
46-49	EROSION CONTROL PLANS
50-55	SANITARY SEWER PLAN AND PROFILES
56-61	WATER MAIN PLAN AND PROFILES
62-64	UNDERGROUND ELECTRIC PLANS
65-78	LIGHTING PLANS
79	HUDSON CROSSING PARK LIGHTING PLAN
80-82	PAVEMENT MARKING AND SIGNAGE PLANS
83-84	LANDSCAPE PLANS
85	HUDSON CROSSING PARK ENTRANCE PLAN
86-92	DETAILS
93-128	CROSS SECTIONS

Traffic Data

STREET	CURRENT ADT	FUTURE ADT
HARRISON	1,800	2,000
ADAMS	1,800	2,000
JACKSON	1,800	2,000
WASHINGTON	1,800	2,000

Design / Posted Speed

STREET	DESIGN SPEED	POSTED SPEED
HARRISON	25	25
ADAMS	25	25
JACKSON	25	25
WASHINGTON	25	25

Design Functional Classification

STREET	DESIGN FUNCTIONAL CLASSIFICATION
HARRISON	LOCAL (URBAN CBD)
ADAMS	LOCAL (URBAN CBD)
JACKSON	LOCAL (URBAN CBD)
WASHINGTON	LOCAL (URBAN CBD)

Highway Standards

STANDARD NO.	DESCRIPTION
000001-07	STANDARD SYMBOLS, ABBREVIATIONS AND PATTERNS
424001-11	PERPENDICULAR CURB RAMPS FOR SIDEWALKS
424006-04	DIAGONAL CURB RAMPS FOR SIDEWALKS
424011-04	CORNER PARALLEL CURB RAMPS FOR SIDEWALKS
424021-05	DEPRESSED CORNER FOR SIDEWALKS
442201-03	CLASS C AND D PATCHES
604001-04	FRAME AND LIDS TYPE 1
542301-03	PRECAST REINFORCED CONCRETE FLARED END SECTION
604036-03	GRATE TYPE 8
604046-03	FRAME AND GRATE TYPE 10
604051-04	FRAME AND GRATE TYPE 11
701606-10	URBAN SINGLE LANE CLOSURE, MULTILANE, 2W WITH MOUNTABLE MEDIAN
701901-08	TRAFFIC CONTROL DEVICES
720006-04	SIGN PANEL ERECTION DETAILS
720016-04	MAST ARM MOUNTED STREET NAME SIGNS
728001-01	TELESCOPING STEEL SIGN SUPPORT
B.L.R. 10-7	PCC PAVEMENT SPECIAL
B.L.R. 14-12	PORTLAND CEMENT CONCRETE PAVEMENT (NONREINFORCED)
B.L.R. 22-7	TYPICAL APPLICATION OF TRAFFIC CONTROL DEVICES FOR CONSTRUCTION ON RURAL LOCAL HIGHWAYS

IDOT District 3 Standards

STANDARD NO.	DESCRIPTION
251-1	EROSION CONTROL BLANKET AT MEDIAN INLET STD. 604101 RO STA. 604106
251-2	DETAIL OF EROSION CONTROL BLANKET LINING AROUND END SECTION
251-4	EXCELSIOR BLANKET (SPECIAL) DETAILS
280-1	EROSION CONTROL DETAILS FOR SILT FENCE
406-9	BUTT JOINT
423-1	PCC URBAN ENTRANCES
720-10	TEMPORARY INFORMATION SIGN - ROAD CLOSED
780-3	TYPICAL SPACING DETAIL FOR CROSSWALK AND STOP BARS
780-9	TYPICAL DETAIL FOR PAINTING HANDICAP MARKINGS

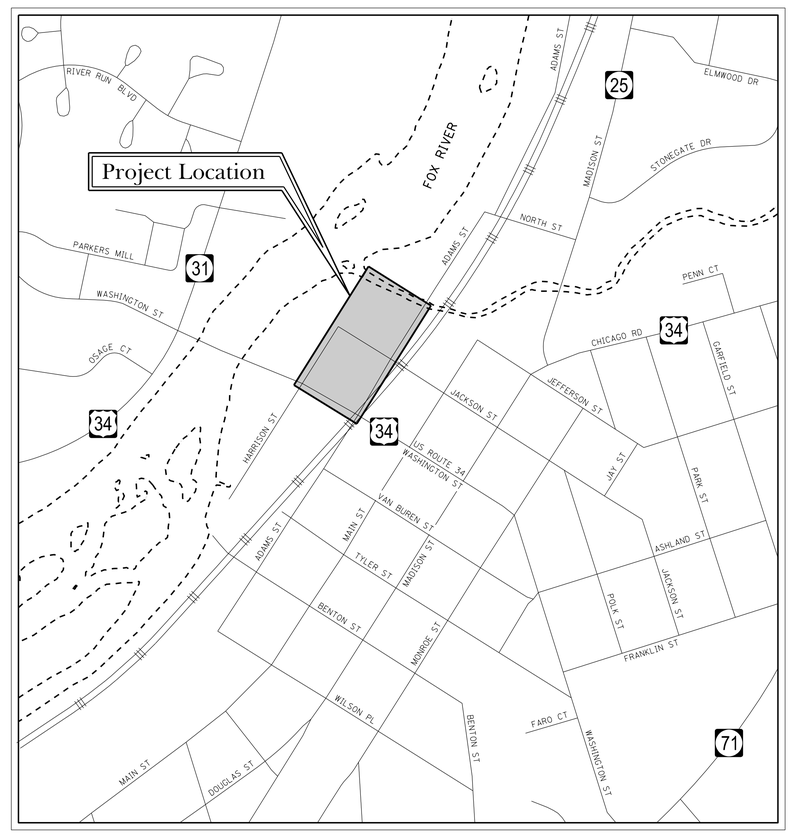

Location Map

N.T.S.

Harrison Street = 1,200 Feet (0.227 Miles)
Adams Street = 700 Feet (0.133 Miles)
Jackson Street = 400 Feet (0.076 Miles)
Washington Street = 340 Feet (0.064 Miles)

Net Project Length = 2,640 Feet (0.500 Miles)

Village of Oswego

100 Parkers Mill
Oswego, IL 60543

ISSUED FOR BIDDING
NOT FOR CONSTRUCTION

STATE OF ILLINOIS
DEPARTMENT OF TRANSPORTATION
DIVISION OF HIGHWAYS

APPROVED _____

JENNIFER HUGHES
PUBLIC WORKS DIRECTOR /VILLAGE ENGINEER
VILLAGE OF OSWEGO

PASSED _____

DISTRICT 3 ENGINEER OF LOCAL ROAD & STREETS

RELEASED FOR BID BASED ON LIMITED REVIEW _____

REGION 2 ENGINEER

811 Know what's below. Call before you dig.

NOTE:

THE CONTRACTOR SHALL BE RESPONSIBLE FOR DISTRIBUTING COMPLETE SETS OF THESE PLANS AND PROJECT SPECIFICATIONS TO ALL SUBCONTRACTORS INVOLVED IN THIS PROJECT. A COMPLETE COPY OF THESE PLANS AND PROJECT SPECIFICATIONS SHALL BE IN THE POSSESSION OF THE CONTRACTOR AND ALL SUB CONTRACTORS ON THE PROJECT AT ALL TIMES.

PLANS PREPARED BY:

TROTTER and ASSOCIATES, INC.
ENGINEERS AND SURVEYORS
40W201 Wasco Road, Suite D
St. Charles, IL 60175
Ph.: 630-587-0470 Fax: 630-587-0475

I HEREBY CERTIFY THAT THESE PLANS WERE PREPARED UNDER MY DIRECT SUPERVISION.
DATED AT ST. CHARLES, ILLINOIS, THIS 1st DAY OF March, 2019

TERRY HEITKAMP, P.E., TROTTER AND ASSOCIATES, INC.
ILLINOIS REGISTERED PROFESSIONAL ENGINEER No. 062-058718 / EXPIRATION DATE 11-30-2019
ILLINOIS DEPARTMENT OF PROFESSIONAL REGULATION FIRM NUMBER 184-002148

TERRY M. HEITKAMP 58718 LICENSED PROFESSIONAL ENGINEER OF ILLINOIS
SEAL

Addendum #1: March 1, 2019
Issued for Bidding: February 21, 2019

Summary of Quantities

DEMOLITION / REMOVAL / ABANDONMENT

SP	CODE NO	ITEM	UNIT	TOTAL QUANTITY
	20100110	TREE REMOVAL (6 TO 15 UNITS DIAMETER)	UNIT	197
	20100210	TREE REMOVAL (OVER 15 UNITS DIAMETER)	UNIT	344
	44000100	PAVEMENT REMOVAL	SQ YD	7,055
	44000200	DRIVEWAY PAVEMENT REMOVAL	SQ YD	81
	44000300	CURB REMOVAL	FOOT	31
	44000500	COMBINATION CURB AND GUTTER REMOVAL	FOOT	1,997
	44000600	SIDEWALK REMOVAL	SQ FT	5,559
	55100300	STORM SEWER REMOVAL 8"	FOOT	58
	55100500	STORM SEWER REMOVAL 12"	FOOT	604
	55100700	STORM SEWER REMOVAL 15"	FOOT	370
	55101200	STORM SEWER REMOVAL 24"	FOOT	37
	60500040	REMOVING MANHOLES	EACH	4
	60500050	REMOVING CATCH BASINS	EACH	7
	60500060	REMOVING INLETS	EACH	2
	72400100	REMOVE SIGN PANEL ASSEMBLY - TYPE A	EACH	12
*	X0120014	WATER MAIN ABANDONMENT	EACH	3
*	X0322936	REMOVE EXISTING FLARED END SECTION	EACH	3
*	X0326864	BRICK SIDEWALK REMOVAL	SQ FT	2,635
*	X0840000	SANITARY SEWER REMOVAL 8"	FOOT	343
*	X6026622	VALVE VAULTS TO BE REMOVED	EACH	5
*	Z0022800	FENCE REMOVAL	FOOT	266
*		FIRE HYDRANT TO BE REMOVED	EACH	3
*		REMOVE AND RELOCATE DECORATIVE POLE AND SIGNS	EACH	4
*		ABANDON AND FILL EXISTING STORM SEWER	FOOT	45

EARTHWORK

SP	CODE NO	ITEM	UNIT	TOTAL QUANTITY
	20200100	EARTH EXCAVATION	CU YD	2,042
	20201200	REMOVAL AND DISPOSAL OF UNSUITABLE MATERIAL	CU YD	3,012
*	20400800	FURNISHED EXCAVATION	CU YD	4,336
	20700220	POROUS GRANULAR EMBANKMENT	CU YD	6,900
*	21001000	GEOTECHNICAL FABRIC FOR GROUND STABILIZATION	SQ YD	7,491
	21301048	EXPLORATION TRENCH 48" DEPTH	FOOT	100

ROADWAY

SP	CODE NO	ITEM	UNIT	TOTAL QUANTITY
	35101500	AGGREGATE BASE COURSE, TYPE B	CU YD	1,103
	35501308	HOT-MIX ASPHALT BASE COURSE, 6"	SQ YD	6,391
	40600275	BITUMINOUS MATERIALS (PRIME COAT)	POUND	14,380
	40600290	BITUMINOUS MATERIALS (TACK COAT)	POUND	2,876
	40603085	HOT-MIX ASPHALT BINDER COURSE, IL-19.0, N50	TON	1,432
	40603340	HOT-MIX ASPHALT SURFACE COURSE, MIX "D", N50	TON	895
	42000201	PORTLAND CEMENT CONCRETE PAVEMENT 7" (JOINTED)	SQ YD	228
	42300400	PORTLAND CEMENT CONCRETE DRIVEWAY PAVEMENT, 8 INCH	SQ YD	74
	42400200	PORTLAND CEMENT CONCRETE SIDEWALK 5 INCH	SQ FT	19,768
	42400800	DETECTABLE WARNINGS	SQ FT	308
	60603800	COMBINATION CONCRETE CURB AND GUTTER, TYPE B-6.12	FOOT	4,030
	60605000	COMBINATION CONCRETE CURB AND GUTTER, TYPE B-6.24	FOOT	189
	72000100	SIGN PANEL - TYPE 1	SQ FT	60
	72800100	TELESCOPING STEEL SIGN SUPPORT	FOOT	150
	78008200	POLYUREA PAVEMENT MARKING TYPE I - LETTERS AND SYMBOLS	SQ FT	86
	78008210	POLYUREA PAVEMENT MARKING TYPE I - LINE 4"	FOOT	2,689
	78008270	POLYUREA PAVEMENT MARKING TYPE I - LINE 24"	FOOT	91
*	X0326863	BRICK SIDEWALK	SQ FT	4,003
*	X0326864	BRICK SIDEWALK (PARK)	SQ FT	3,980
*	Z0004510	HOT-MIX ASPHALT DRIVEWAY PAVEMENT, 3"	SQ YD	87
*		REINSTALL SALVAGED BRICK SIDEWALK	SQ FT	415
*		BRICK PAVEMENT	SQ YD	191
*		CLASS D PATCH, SPECIAL, 3"	SQ YD	543
*		CLASS D PATCH, SPECIAL, 12.5"	SQ YD	204
*		HOT-MIX ASPHALT BIKE PATH	SQ YD	91
*		DECORATIVE SIGN POLE	EACH	2

SANITARY SEWER

SP	CODE NO	ITEM	UNIT	TOTAL QUANTITY
*		SANITARY MANHOLE, TYPE A, 4' DIAMETER, TYPE 1 FRAME, CLOSED LID	EACH	12
*		SANITARY MANHOLE, TYPE C, 4' DIAMETER, TYPE 1 FRAME, CLOSED LID	EACH	1
*		SANITARY DROP MANHOLE, TYPE A, 4' DIAMETER, TYPE 1 FRAME, CLOSED LID	EACH	1
*		SANITARY SEWER, PVC, SDR-26, 8"	FOOT	42
*		SANITARY SEWER, PVC, SDR-26, 10"	FOOT	662
*		SANITARY SEWER, PVC, SDR-26, 12"	FOOT	1,348
*		STEEL CASING, JACK AND BORE, 30"	FOOT	105
*		GREASE INTERCEPTOR - 1,500 GALLON	EACH	1
*		SANITARY SERVICE, PVC, 6"	FOOT	92

STORM SEWER

SP	CODE NO	ITEM	UNIT	TOTAL QUANTITY
	54213657	PRECAST REINFORCED CONCRETE FLARED END SECTIONS 12"	EACH	1
	54213663	PRECAST REINFORCED CONCRETE FLARED END SECTIONS 18"	EACH	1
	54213669	PRECAST REINFORCED CONCRETE FLARED END SECTIONS 24"	EACH	1
	60200205	CATCH BASINS, TYPE A, 4'-DIAMETER, TYPE 1 FRAME, CLOSED LID	EACH	2
	60200805	CATCH BASINS, TYPE A, 4'-DIAMETER, TYPE 8 GRATE	EACH	2
	60201005	CATCH BASINS, TYPE A, 4'-DIAMETER, TYPE 10 FRAME AND GRATE	EACH	4
	60201105	CATCH BASINS, TYPE A, 4'-DIAMETER, TYPE 11 FRAME AND GRATE	EACH	9
	60207605	CATCH BASINS, TYPE C, TYPE 8 GRATE	EACH	1
	60207805	CATCH BASINS, TYPE C, TYPE 10 FRAME AND GRATE	EACH	4
	60207905	CATCH BASINS, TYPE C, TYPE 11 FRAME AND GRATE	EACH	5
	60218400	MANHOLES, TYPE A, 4'-DIAMETER, TYPE 1 FRAME, CLOSED LID	EACH	6
	550A0050	STORM SEWERS, CLASS A, TYPE 1 12"	FOOT	190
	550A0070	STORM SEWERS, CLASS A, TYPE 1 15"	FOOT	68
	550A0340	STORM SEWERS, CLASS A, TYPE 2 12"	FOOT	655
	550A0360	STORM SEWERS, CLASS A, TYPE 2 15"	FOOT	121
	550A0380	STORM SEWERS, CLASS A, TYPE 2 18"	FOOT	196
	550A0400	STORM SEWERS, CLASS A, TYPE 2 21"	FOOT	191
	550A0410	STORM SEWERS, CLASS A, TYPE 2 24"	FOOT	153
	550B0340	STORM SEWERS, CLASS B, TYPE 2 12"	FOOT	18
*		TRENCH DRAIN - PATIO	FOOT	42
*		TRENCH DRAIN - PAVEMENT	FOOT	20

WATER MAIN

SP	CODE NO	ITEM	UNIT	TOTAL QUANTITY
*	X5630706	CONNECTION TO EXISTING WATER MAIN 6"	EACH	1
*	X5630710	CONNECTION TO EXISTING WATER MAIN 10"	EACH	2
*	X5640175	FIRE HYDRANT COMPLETE	EACH	7
*	Z0067700	STEEL CASINGS 20"	FOOT	196
*	Z0067900	STEEL CASINGS 30"	FOOT	21
*		WATER MAIN, 8", DUCTILE IRON	FOOT	320
*		WATER MAIN, 10", DUCTILE IRON	FOOT	1,520
*		ADJUSTING WATER MAIN, SPECIAL, 12"	FOOT	36
*		WATER SERVICE LINE, SPECIAL, 1"	FOOT	90
*		VALVE VAULT, TYPE A, 5'-DIAMETER, TYPE 1 FRAME, CLOSED LID, 8" GATE VALVE	EACH	1
*		VALVE VAULT, TYPE A, 5'-DIAMETER, TYPE 1 FRAME, CLOSED LID, 10" GATE VALVE	EACH	6
*		VALVE VAULT, TYPE A, 5'-DIAMETER, TYPE 1 FRAME, CLOSED LID, 12" GATE VALVE	EACH	1
*		VALVE BOX, 10" GATE VALVE	EACH	2

UNDERGROUND ELECTRIC AND AT&T

SP	CODE NO	ITEM	UNIT	TOTAL QUANTITY
*		PRECAST CONCRETE TRANSFORMER PAD	EACH	4
*		PRECAST CONCRETE SWITCHGEAR PAD	EACH	1
*		ELECTRIC SPLICE BOX	EACH	1
*		CONNECTION TO UTILITY POLE	EACH	7
*		ELECTRIC CABLE IN CONDUIT, 500 CU - 400 AMP SECONDARY CABLE	FOOT	100
*		UNDERGROUND CONDUIT, PVC, 4" DIA	FOOT	467
*		UNDERGROUND CONDUIT, PVC, 6" DIA	FOOT	2,073

LIGHTING

SP	CODE NO	ITEM	UNIT	TOTAL QUANTITY
	81028210	UNDERGROUND CONDUIT, GALVANIZED STEEL, 2 1/2" DIA.	FOOT	300
	81028240	UNDERGROUND CONDUIT, GALVANIZED STEEL, 4" DIA.	FOOT	110
	81028710	UNDERGROUND CONDUIT, COILABLE NONMETALLIC CONDUIT, 3/4" DIA.	FOOT	350
	81028730	UNDERGROUND CONDUIT, COILABLE NONMETALLIC CONDUIT, 1 1/4" DIA.	FOOT	4000
	81028740	UNDERGROUND CONDUIT, COILABLE NONMETALLIC CONDUIT, 1 1/2" DIA.	FOOT	700
	81028750	UNDERGROUND CONDUIT, COILABLE NONMETALLIC CONDUIT, 2" DIA.	FOOT	525
	81028790	UNDERGROUND CONDUIT, COILABLE NONMETALLIC CONDUIT, 4" DIA.	FOOT	100
	83600200	LIGHT POLE FOUNDATION, 24" DIAMETER	FOOT	350
	84200500	REMOVAL OF LIGHTING UNIT, SALVAGE	EACH	17
	84200804	REMOVAL OF POLE FOUNDATION	EACH	11
*	84500110	REMOVAL OF LIGHTING CONTROLLER	EACH	1
*	84500120	REMOVAL OF ELECTRIC SERVICE INSTALLATION	EACH	1
*	84500130	REMOVAL OF LIGHTING CONTROLLER FOUNDATION	EACH	1
*	89502380	REMOVE EXISTING HANDHOLE	EACH	1
*	X0325815	REMOVE EXISTING CABLE	FOOT	1000
*	X1200139	REMOVAL OF LIGHTING LUMINAIRE, SALVAGE	EACH	2
*	X8140230	HANDHOLE, COMPOSITE CONCRETE (SPECIAL)	EACH	10
*	X8360215	LIGHT POLE FOUNDATION, 24" DIAMETER, OFFSET	FOOT	60
*	XX008195	EXPLORATION EXCAVATION (UTILITY)	FOOT	120
*	Z0033028	MAINTENANCE OF LIGHTING SYSTEM	CAL MO	9

LANDSCAPING

SP	CODE NO	ITEM	UNIT	TOTAL QUANTITY
*		TREE, ACER SACCHARUM 'CRESCENDO' (CRESCENDO SUGAR MAPLE), 3" CALIPER, BALLED AND BURLAPPED	EACH	2
*		TREE, GINKGO BILOBA 'AUTUMN GOLD' (AUTUMN GOLD GINKGO), 3" CALIPER, BALLED AND BURLAPPED	EACH	4
*		TREE, GYMNOCLADUS DIOICUS 'ESPRESSO' (ESPRESSO KENTUCKY COFFEE TREE), 4" CALIPER, BALLED AND BURLAPPED	EACH	2
*		TREE, PLATANUS ACERIFOLIA 'MORTON CIRCLE' (EXCLAMATION LONDON PLANETREE), 3" CALIPER, TREE FORM, BALLED AND BURLAPPED	EACH	3
*		TREE, TILIA CORDATA 'GREENSPIRE' (GREENSPIRE LINDEN), 3" CALIPER, BALLED AND BURLAPPED	EACH	2
*		TREE, HEPTACODIUM MICNOIDES (SEVEN SON FLOWER), 8' HEIGHT, CLUMP FORM, BALLED AND BURLAPPED	EACH	4
*		TREE, OSTRYA VIRGINIANA (AMERICAN HOPHORNBEAM), 3" CALIPER, BALLED AND BURLAPPED	EACH	5
*		EVERGREEN, TAXUS X MEDIA 'TAUNTONII' (TAUNTON YEW), 24", BALLED AND BURLAPPED	EACH	21
*		SHRUB, CORNUS STOLONIFERA 'ARCTIC FIRE' (ARCTIC FIRE DOGWOOD), CONTAINER GROWN, 7-GALLON	EACH	7
*		SHRUB, DIERVILLA LONICERA (DWARF BUSH HONEY SUCKLE), 5-GALLON	EACH	30
*		SHRUB, FOTHERGILLA GARDENII (DWARF FOTHERGILLA), 3-GALLON	EACH	5
*		SHRUB, HYDRANGEA ARBORESCENS 'INCREDIBALL' (INCREDIBALL HYDRANGEA), 5-GALLON	EACH	21
*		SHRUB, SYRINGA PATULA 'MISS KIM' (MISS KIM LILAC), 3' HEIGHT, BALLED AND BURLAPPED	EACH	7
*		SHRUB, VIBURNUM PRUNIFOLIUM (BLACKHAW VIBURNUM), 5' HEIGHT, BALLED AND BURLAPPED	EACH	3
*		SHRUB, VIBURNUM DENTATUM (ARROWWOOD VIBURNUM), 4' HEIGHT, BALLED AND BURLAPPED	EACH	15
*		PERENNIAL PLANTS, ALLIUM 'SUMMER BEAUTY' (SUMMER BEAUTY ONION), 1-GALLON	EACH	51
*		PERENNIAL PLANTS, CALAMAGROSTIS X ACUTIFLORA 'KARL FORESTER' (FEATHER REED GRASS), 3-GALLON	EACH	6
*		PERENNIAL PLANTS, CHASMANTHIUM LATIFOLIUM (NORTHERN SEA OATS), 1-GALLON	EACH	83
*		PERENNIAL PLANTS, CAREX MUSKINGUMENSIS 'OEHME' (OEHME PALM SEDGE), 1-GALLON	EACH	31
*		PERENNIAL PLANTS, HEMEROCALIS 'HAPPY RETURNS' (HAPPY RETURNS DAYLILY), 1-GALLON	EACH	166
*		PERENNIAL PLANTS, PANICUM VIRGATUM 'HEAVY METAL' (HEAVY METAL SWITCHGRASS), 3-GALLON	EACH	18
*		PERENNIAL PLANTS, SESLERIA AUTUMNALIS (AUTUMN MORE GRASS), 1-GALLON	EACH	128
*		PERENNIAL PLANTS, SPOROBOLUS HETEROLEPIS (PRAIRIE DROPSEED), 1-GALLON	EACH	12
*		MULCH PLACEMENT 3"	SQ YD	1,013
*		TRASH RECEPTACLE	EACH	13
*		RECYCLING RECEPTACLE	EACH	2
*		PLANTER	EACH	27
*		BENCH	EACH	16
*		BIKE RACK	EACH	2

RESTORATION

SP	CODE NO	ITEM	UNIT	TOTAL QUANTITY
	21101615	TOPSOIL FURNISH AND PLACE, 4"	SQ YD	3,824
	25000110	SEEDING, CLASS 1A	ACRE	0.486
	25000314	SEEDING, CLASS 4B	ACRE	0.304
	25200110	SODDING, SALT TOLERANT	SQ YD	2,814

EROSION / SEDIMENT CONTROL

SP	CODE NO	ITEM	UNIT	TOTAL QUANTITY
	28000400	PERIMETER EROSION BARRIER	FOOT	1,787
	28000510	INLET FILTERS	EACH	32
	28001100	TEMPORARY EROSION CONTROL BLANKET	SQ YD	2,353

MISCELLANEOUS

SP	CODE NO	ITEM	UNIT	TOTAL QUANTITY
	50901760	PIPE HANDRAIL	FOOT	96
	67100100	MOBILIZATION	L SUM	1
*		REMOVE AND RESET MAILBOX	EACH	2
*		STREET LIGHT TO BE PAINTED	EACH	4
*		PORTLAND CEMENT CONCRETE STEPS	CU YD	5
*		SEGMENTAL CONCRETE BLOCK RETAINING WALL	SQ FT	778
*		BOLLARD	EACH	4
*		TRAFFIC CONTROL AND PROTECTION, SPECIAL	L SUM	1
		RAILROAD PROTECTIVE LIABILITY INSURANCE	L SUM	1

ALTERNATE #1 - LIGHTING CABLE AND FIXTURES

SP	CODE NO	ITEM	UNIT	TOTAL QUANTITY
	80400100	ELECTRIC SERVICE INSTALLATION	EACH	2
	81702110	ELECTRIC CABLE IN CONDUIT, 600V (XLP-TYPE USE) 1/C NO. 10	FOOT	3850
	81702120	ELECTRIC CABLE IN CONDUIT, 600V (XLP-TYPE USE) 1/C NO. 8	FOOT	4200
	81702130	ELECTRIC CABLE IN CONDUIT, 600V (XLP-TYPE USE) 1/C NO. 6	FOOT	15150
	81702140	ELECTRIC CABLE IN CONDUIT, 600V (XLP-TYPE USE) 1/C NO. 4	FOOT	2750
	81702180	ELECTRIC CABLE IN CONDUIT, 600V (XLP-TYPE USE) 1/C NO. 3/0	FOOT	630
	82500370	LIGHTING CONTROLLER, BASE MOUNTED, 240 VOLT, 200 AMP	EACH	2
*	X0324058	OUTLET SPECIAL	EACH	3
*	X0326498	GFCI 20 AMP DUPLEX RECEPTACLE	EACH	4
*	X0327141	LIGHTING STANDARD, TYPE 1	EACH	29
*	X0327142	LIGHTING STANDARD, TYPE 2	EACH	6
*	X1400238	LUMINAIRE, LED, SPECIAL	EACH	37

ALTERNATE #2 - HUDSON CROSSING PARK

SP	CODE NO	ITEM	UNIT	TOTAL QUANTITY
*	Z0022800	FENCE REMOVAL	FOOT	103
*		COLUMN REMOVAL	EACH	8
	42400800	DETECTABLE WARNINGS	SQ FT	156
*	X0326864	BRICK SIDEWALK (PARK)	SQ FT	3,980
*		REINSTALL SALVAGED BRICK SIDEWALK	SQ FT	824
*	84400105	RELOCATE EXISTING LIGHTING UNIT	EACH	3
*		TREE, TAXODIUM DISTICHUM (BALD CYPRESS), 4" CALIPER, BALLED AND BURLAPPED	EACH	2
*		TREE, CERCIDIPHYLLYM JAPONICUM (KATSURA TREE), 3" CALIPER, BALLED AND BURLAPPED	EACH	4
*		SHRUB, ILEX GLABRA 'SHAMROCK (SHAMROCK INKBERRY), 18" HEIGHT, BALLED AND BURLAPPED	EACH	8
*		MULCH PLACEMENT 3"	SQ YD	37
*		TRASH RECEPTACLE	EACH	2
*		RECYCLING RECEPTACLE	EACH	2
*		BIKE RACK	EACH	2
	50901760	PIPE HANDRAIL	FOOT	188
*		ORNAMENTAL FENCE	FOOT	112
*		STONE FENCE COLUMN	EACH	4
*		STONE ARCH COLUMN	EACH	2
*		INTEGRAL BARRIER WALL AND SIDEWALK	SQ FT	686
*		SEGMENTAL CONCRETE BLOCK RETAINING WALL	SQ FT	158

DATE	REVISIONS	ISSUE
3/1/19	ADDENDUM #1	1.
2/21/19	ISSUED FOR BIDDING	

PROJECT STAFF
PROJECT MANAGER: SCOTT TROTTER, P.E.
ENGINEER: TERRY HEITKAMP, P.E.
ENGINEER:
ENGINEER:
TECHNICIAN: MIKE DAVISON
TECHNICIAN:

TROTTER and ASSOCIATES, INC.
ENGINEERS AND SURVEYORS
40W201 Wasco Road, Suite D
St. Charles, Il. 60175
Ph.: 630-587-0470 • Fax: 630-587-0475

The Reserve at Hudson Crossing - Roadway Improvements
Summary of Quantities
Oswego, Kendall County, Illinois

Project No.: SH0002
File Name: 04_S00.dgn
Issue Date: 3/1/2019
Scale: N.T.S.
Sheet Number
4

Pavement Removal

ALIGNMENT	STA. TO STA.	QUANTITY (SQ YD)
HARRISON STREET	8+06.81 TO 8+70.00	74
HARRISON STREET	10+22.03 TO 10+57.55	121
HARRISON STREET	10+57.55 TO 13+00.00	1,289
HARRISON STREET	13+00.00 TO 16+11.30	1,768
HARRISON STREET	16+11.67 TO 16+39.63	46
ADAMS STREET	20+22.06 TO 20+54.75	105
ADAMS STREET	20+54.75 TO 23+00.00	751
ADAMS STREET	23+00.00 TO 26+81.88	1,835
ADAMS STREET	26+81.88 TO 26+93.06	30
ADAMS STREET	26+93.06 TO 27+06.38	35
JACKSON STREET	200+08.60 TO 203+30.24	1,001
	TOTAL	7,055

Driveway Pavement Removal

LOCATION	STA	QUANTITY (SQ YD)
#19 ADAMS STREET	25+26.40	38
#13 AND #15 ADAMS STREET	26+02.53	43
	TOTAL	81

Sidewalk Removal

ALIGNMENT	STA. TO STA.	OFFSET	QUANTITY (SQ FT)
HARRISON STREET	4+92.44 TO 5+03.58	LT	55
HARRISON STREET	5+39.24 TO 5+49.24	LT	50
HARRISON STREET	7+06.98 TO 7+18.26	LT	55
HARRISON STREET	8+13.04 TO 8+22.81	LT	50
HARRISON STREET	8+54.62 TO 8+63.81	LT	45
HARRISON STREET	8+94.03 TO 9+00.07	LT	60
ADAMS STREET	23+09.63 TO 23+50.82	RT	413
ADAMS STREET	23+80.09 TO 26+81.34	RT	1,981
ADAMS STREET	23+86.90 TO 25+18.24	LT	653
ADAMS STREET	25+34.75 TO 26+81.99	LT	727
JACKSON STREET	202+35.55 TO 203+12.50	LT	264
WASHINGTON STREET	108+32.42 TO 110+84.55	LT	1,206
		TOTAL	5,559

Brick Sidewalk Removal

ALIGNMENT	STA. TO STA.	OFFSET	QUANTITY (SQ FT)
HARRISON STREET	10+24.59 TO 10+56.57	LT	200
HARRISON STREET	11+98.44	LT	111
HARRISON STREET	12+90.89	LT	109
HARRISON STREET	13+20.91 TO 14+12.91	LT	1,020
HARRISON STREET	14+46.11	LT	526
HARRISON STREET	15+96.81 TO 16+10.90	LT	115
ADAMS STREET	26+87.36	RT	300
WASHINGTON STREET	108+12.48 TO 108+32.42	LT	119
WASHINGTON STREET	110+84.55 TO 111+06.40	LT	135
		TOTAL	2,635

Combination Curb and Gutter Removal

ALIGNMENT	STA. TO STA.	OFFSET	QUANTITY (FOOT)
HARRISON STREET	4+92.44 TO 9+44.33	LT	516
HARRISON STREET	10+24.59 TO 103+00.00	LT	307
HARRISON STREET	10+24.31 TO 10+56.83	RT	51
HARRISON STREET	103+00.00 TO 14+29.10	LT	173
ADAMS STREET	20+24.62 TO 20+54.22	LT	49
ADAMS STREET	20+37.38 TO 20+54.62	RT	18
ADAMS STREET	22+25.43 TO 23+00.00	RT	90
ADAMS STREET	23+00.00 TO 23+50.82	RT	95
ADAMS STREET	23+78.91 TO 27+06.38	RT	385
ADAMS STREET	23+83.31 TO 26+81.99	LT	313
		TOTAL	1,997

Curb Removal

ALIGNMENT	STA. TO STA.	OFFSET	QUANTITY (FOOT)
HARRISON STREET	14+30.71 TO 14+61.66	LT	31
		TOTAL	31

Tree Removal (6 to 15 Units Diameter)

ALIGNMENT	STATION	OFFSET	QUANTITY (UNITS)
HARRISON STREET	14+15.94	15.71′ RT	9
HARRISON STREET	15+92.64	26.49′ LT	6
ADAMS STREET	24+02.47	46.06′ LT	12
ADAMS STREET	24+25.87	41.74′ LT	14
ADAMS STREET	24+58.67	21.11′ LT	6
ADAMS STREET	24+92.70	20.90′ LT	6
ADAMS STREET	25+60.20	169.50′ LT	6
ADAMS STREET	25+62.88	19.76′ LT	8
ADAMS STREET	25+63.13	169.38′ LT	2x6
ADAMS STREET	25+84.68	173.03′ LT	6
ADAMS STREET	25+88.60	169.34′ LT	8
ADAMS STREET	26+13.76	173.22′ LT	7
ADAMS STREET	26+37.70	26.33′ LT	8
ADAMS STREET	26+46.89	161.41′ LT	8
ADAMS STREET	26+53.57	32.37′ LT	8
JACKSON STREET	201+86.76	28.81′ LT	8
JACKSON STREET	202+16.85	30.99′ LT	6
JACKSON STREET	202+74.67	26.21′ LT	8
JACKSON STREET	202+94.46	26.13′ LT	7
WASHINGTON STREET	108+61.50	39.35′ LT	8
WASHINGTON STREET	109+07.00	39.37′ LT	8
WASHINGTON STREET	109+46.74	38.91′ LT	10
WASHINGTON STREET	109+89.17	39.60′ LT	10
WASHINGTON STREET	110+38.81	39.87′ LT	8
		TOTAL	197

Tree Removal (Over 15 Units Diameter)

ALIGNMENT	STATION	OFFSET	QUANTITY (UNITS)
HARRISON STREET	11+55.74	35.78′ LT	18
HARRISON STREET	11+71.36	35.83′ LT	22
HARRISON STREET	12+62.36	33.62′ LT	22
HARRISON STREET	13+56.85	67.26′ LT	16
ADAMS STREET	24+37.00	40.81′ LT	18
ADAMS STREET	24+75.66	39.23′ LT	2x20
ADAMS STREET	25+43.38	142.97′ LT	16
ADAMS STREET	25+51.00	168.69′ LT	30
ADAMS STREET	25+88.51	140.09′ LT	40
ADAMS STREET	26+21.95	156.51′ LT	20
ADAMS STREET	26+29.67	160.58′ LT	18
ADAMS STREET	26+38.40	31.69′ LT	2x18
ADAMS STREET	26+43.76	161.11′ LT	20
JACKSON STREET	202+37.73	25.16′ LT	28
		TOTAL	344

Street Light Removal

ALIGNMENT	STATION	OFFSET	QUANTITY (EACH)
HARRISON STREET	11+25.25	17.71′ RT	1
HARRISON STREET	13+41.82	20.64′ RT	1
HARRISON STREET	14+07.23	13.59′ RT	1
HARRISON STREET	15+94.18	14.73′ RT	1
ADAMS STREET	22+37.36	20.91′ RT	1
ADAMS STREET	23+19.62	22.17′ RT	1
ADAMS STREET	24+20.93	17.60′ LT	1
ADAMS STREET	24+60.16	44.49′ RT	1
ADAMS STREET	25+05.18	16.92′ LT	1
ADAMS STREET	25+37.73	45.45′ RT	1
ADAMS STREET	25+77.05	16.77′ LT	1
ADAMS STREET	26+31.36	45.31′ RT	1
ADAMS STREET	26+59.02	16.36′ LT	1
ADAMS STREET	26+66.81	40.79′ RT	1
JACKSON STREET	203+10.81	28.21′ LT	1
		TOTAL	15

Remove and Relocate Street Light

ALIGNMENT	STATION	OFFSET	QUANTITY (EACH)
HARRISON STREET	13+16.92	16.97′ LT	1
HARRISON STREET	14+08.68	26.29′ LT	1
HARRISON STREET	14+98.42	28.97′ RT	1
		TOTAL	3

Paint Existing Street Light

ALIGNMENT	STATION	OFFSET	QUANTITY (EACH)
WASHINGTON ST	108+34.17	36.09′ LT	1
WASHINGTON ST	109+26.74	35.63′ LT	1
WASHINGTON ST	110+02.64	36.04′ LT	1
WASHINGTON ST	110+99.09	36.29′ LT	1
		TOTAL	4

Sign Removal

ALIGNMENT	STATION	OFFSET	QUANTITY (EACH)
HARRISON STREET	12+41.58	34.26′ LT	1
HARRISON STREET	13+04.51	33.60′ LT	1
HARRISON STREET	14+34.71	40.16′ LT	1
HARRISON STREET	14+51.83	39.87′ LT	1
ADAMS STREET	20+44.58	14.63′ LT	1
ADAMS STREET	23+33.93	20.22′ RT	1
ADAMS STREET	24+03.20	16.17′ RT	1
ADAMS STREET	24+05.75	31.89′ RT	1
ADAMS STREET	24+07.22	18.16′ LT	1
ADAMS STREET	26+64.81	15.44′ RT	1
ADAMS STREET	26+80.35	14.28′ RT	1
WASHINGTON STREET	108+75.71	37.73′ LT	1
		TOTAL	12

Remove and Relocate Sign

ALIGNMENT	STATION	OFFSET	QUANTITY (EACH)
HARRISON STREET	10+38.32	22.07′ RT	1
ADAMS STREET	20+39.78	21.04′ LT	1
ADAMS STREET	23+33.05	27.99′ RT	1
ADAMS STREET	24+05.59	26.60′ LT	1
		TOTAL	4

Manhole Removal

ALIGNMENT	STATION	OFFSET	QUANTITY (EACH)
HARRISON STREET	3+83.55	22.62′ LT	1 ⚠1
HARRISON STREET	5+01.68	20.85′ LT	1
HARRISON STREET	8+45.07	23.66′ LT	1
HARRISON STREET	13+63.96	32.06′ LT	1
		TOTAL	4 ⚠1

Catch Basin Removal

ALIGNMENT	STATION	OFFSET	QUANTITY (EACH)
HARRISON STREET	7+17.16	17.60′ LT	1
HARRISON STREET	13+70.42	15.77′ LT	1
HARRISON STREET	14+27.99	6.93′ LT	1
ADAMS STREET	26+41.21	21.10′ RT	1
JACKSON STREET	201+72.60	25.52′ LT	1
JACKSON STREET	203+28.01	29.25′ RT	1
JACKSON STREET	203+57.72	37.79′ RT	1
		TOTAL	7

Inlet Removal

ALIGNMENT	STATION	OFFSET	QUANTITY (EACH)
HARRISON STREET	13+09.04	30.73′ LT	1
ADAMS STREET	26+62.03	18.50′ RT	1
		TOTAL	2

Flared End Section Removal

ALIGNMENT	STATION	OFFSET	QUANTITY (EACH)
HARRISON STREET	7+09.16	55.46′ LT	1
HARRISON STREET	10+66.20	26.12′ RT	1
HARRISON STREET	10+69.39	26.76′ RT	1
		TOTAL	3

Valve Vault Removal

ALIGNMENT	STATION	OFFSET	QUANTITY (EACH)
HARRISON STREET	5+44.24	19.20′ LT	1
HARRISON STREET	11+04.13	11.62′ RT	1
ADAMS STREET	23+87.40	2.07′ RT	1
ADAMS STREET	24+15.56	0.54′ RT	1
JACKSON STREET	203+62.34	10.31′ LT	1
		TOTAL	5

Fire Hydrant Removal

ALIGNMENT	STATION	OFFSET	QUANTITY (EACH)
HARRISON STREET	10+93.59	15.79′ RT	1
HARRISON STREET	13+43.59	15.63′ RT	1
JACKSON STREET	203+02.19	23.14′ LT	1
		TOTAL	3

Abandon and Fill Existing Storm Sewer

ALIGNMENT	STA. TO STA.	OFFSET	QUANTITY (FOOT)
HARRISON STREET	7+71.31 TO 7+85.73	LT	45
		TOTAL	45

Storm Sewer Removal, 8"

ALIGNMENT	STA. TO STA.	OFFSET	QUANTITY (FOOT)
HARRISON STREET	13+70.42 TO 14+27.99	LT	58
		TOTAL	58

Storm Sewer Removal, 12"

ALIGNMENT	STA. TO STA.	OFFSET	QUANTITY (FOOT)
HARRISON STREET	7+09.16 TO 7+17.16	LT	37
HARRISON STREET	13+09.04 TO 13+63.96	LT	55
HARRISON STREET	13+63.50 TO 13+70.42	LT	10
ADAMS STREET	26+41.21 TO 26+62.03	RT	21
ADAMS STREET	26+62.03 TO 26+99.87	RT	38
JACKSON STREET	199+84.23 TO 201+72.60	LT	200
JACKSON STREET	201+72.60 TO 203+84.50	LT	212
JACKSON STREET	203+28.01 TO 203+57.72	RT	31
		TOTAL	604

Storm Sewer Removal, 15"

ALIGNMENT	STA. TO STA.	OFFSET	QUANTITY (FOOT)
HARRISON STREET	7+85.73 TO 7+88.66	LT	10
JACKSON STREET	199+67.94 TO 203+28.01	RT	360
		TOTAL	370

Storm Sewer Removal, 24"

ALIGNMENT	STA. TO STA.	OFFSET	QUANTITY (FOOT)
HARRISON STREET	10+66.06	---	37
		TOTAL	37

Sanitary Sewer Removal, 8"

ALIGNMENT	STA. TO STA.	OFFSET	QUANTITY (FOOT)
HARRISON STREET	5+01.68 TO 8+45.07	LT	343
		TOTAL	343

Remove and Reset Mailbox

ALIGNMENT	STA. TO STA.	OFFSET	QUANTITY (EACH)
HARRISON STREET	7+65.93	18.83′ LT	2
		TOTAL	2

Fence Removal

ALIGNMENT	STA. TO STA.	OFFSET	QUANTITY (FOOT)
HARRISON STREET	12+99.89 TO 13+55.30	LT	54
HARRISON STREET	13+73.22 TO 14+23.05	LT	49
ADAMS STREET	22+40.80 TO 23+18.20	RT	77
ADAMS STREET	24+62.38 TO 26+51.11	LT	189
		TOTAL	369

Column Removal

ALIGNMENT	STATION	OFFSET	QUANTITY (EACH)
HARRISON STREET	12+98.89	38.26′ LT	1
HARRISON STREET	13+36.43	38.25′ LT	1
HARRISON STREET	13+49.96	38.02′ LT	1
HARRISON STREET	13+56.30	43.95′ LT	1
HARRISON STREET	13+72.22	44.00′ LT	1
HARRISON STREET	13+79.00	38.06′ LT	1
HARRISON STREET	13+92.42	37.85′ LT	1
HARRISON STREET	14+24.05	37.69′ LT	1
		TOTAL	8

ISSUE	REVISIONS	DATE
1.	ADDENDUM #1	3/1/19
	ISSUED FOR BIDDING	2/21/19

PROJECT STAFF
PROJECT MANAGER: SCOTT TROTTER, P.E.
ENGINEER: TERRY HEITKAMP, P.E.
ENGINEER:
ENGINEER:
TECHNICIAN: MIKE DAVISON
TECHNICIAN:

TROTTER and ASSOCIATES, INC.
ENGINEERS AND SURVEYORS
40W201 Wasco Road, Suite D
St. Charles, IL 60175
Ph.: 630-587-0470 • Fax: 630-587-0475

The Reserve at Hudson Crossing - Roadway Improvements
Schedule of Quantities
Oswego, Kendall County, Illinois

Project No.: SH0002
File Name: 05_SCH_1.dgn
Issue Date: 3/1/2019
Scale: N.T.S.
Sheet Number
5

Proposed Roadway Pavement

ALIGNMENT	STA. TO STA.	CLASS D PATCH SPECIAL, 3" (SQ YD)	CLASS D PATCH SPECIAL, 12.5" (SQ YD)	AGGREGATE BASE COURSE TYPE B, 6"		HMA BASE COURSE, 6" (SQ YD)	HMA BINDER COURSE IL-19.0, N50, 4"		HMA SURFACE COURSE MIX "D", N50, 2.5"		BITUMINOUS MATERIALS (TACK COAT) (LBS) (0.025 LB/SF)	BITUMINOUS MATERIALS (PRIME COAT) (LBS) (0.25 LB/SF)	PCC PAVEMENT 7" (JOINTED) (SQ YD)	BRICK PAVEMENT (SQ YD)	NON-WOVEN GEOTEXTILE FABRIC (SQ YD)
				(SQ YD)	(CU YD)		(SQ YD)	(TON)	(SQ YD)	(TON)					
HARRISON STREET	5+00.00 TO 10+00.00	523	203	---	---	---	---	---	---	---	---	---	---	---	---
HARRISON STREET	10+00.00 TO 14+50.00	---	---	1,777	296	1,669	1,669	374	1,669	234	751	3,755	108	65	2,026
HARRISON STREET	14+50.00 TO 15+83.90	---	---	761	127	761	761	170	761	107	342	1,712	---	---	837
ADAMS STREET	20+00.00 TO 24+50.00	---	---	1,489	248	1,369	1,369	307	1,369	192	616	3,080	120	38	1,680
ADAMS STREET	24+50.00 TO 27+06.37	---	---	1,084	181	1,084	1,084	243	1,084	152	488	2,439	---	27	1,222
JACKSON STREET	200+00.00 TO 203+45.32	---	---	1,508	251	1,508	1,508	338	1,508	211	679	3,393	---	61	1,726
	TOTAL	523	203	6,619	1,103	6,391	6,391	1,432	6,391	895	2,876	14,380	228	191	7,491

Bollard

ALIGNMENT	STATION	OFFSET	QUANTITY (EACH)
HARRISON STREET	12+89.39	41.18' RT	1
HARRISON STREET	13+11.39	41.18' RT	1
ADAMS STREET	22+77.42	32.39' LT	1
ADAMS STREET	22+98.41	33.07' LT	1
		TOTAL	4

Comb. Conc. Curb and Gutter, Type B-6.12

ALIGNMENT	STA. TO STA.	OFFSET	QUANTITY (FOOT)
HARRISON STREET	4+92.44 TO 9+44.33	LT	516
HARRISON STREET	10+65.71 TO 14+50.00	LT	430
HARRISON STREET	10+65.71 TO 13+61.05	RT	347
HARRISON STREET	13+88.05 TO 14+50.00	RT	79
HARRISON STREET	14+50.00 TO 15+85.40	LT	150
HARRISON STREET	14+50.00 TO 15+85.40	RT	150
HARRISON STREET	15+85.40, 13.50' LT TO 13.50' RT		27
ADAMS STREET	20+62.82 TO 23+47.93	LT	303
ADAMS STREET	20+64.08 TO 23+50.83	RT	343
ADAMS STREET	23+76.30 TO 24+50.00	LT	91
ADAMS STREET	23+77.98 TO 24+50.00	RT	103
ADAMS STREET	24+50.00 TO 26+81.99	LT	232
ADAMS STREET	24+50.00 TO 27+06.05	RT	278
JACKSON STREET	200+43.53 TO 203+01.85	LT	300
JACKSON STREET	200+43.55 TO 203+00.44	RT	299
JACKSON STREET	200+56.82 TO 202+15.83	RT	159
JACKSON STREET	200+64.25 TO 202+86.90	LT	223
		TOTAL	4,030

Comb. Conc. Curb and Gutter, Type B-6.24

ALIGNMENT	STA. TO STA.	OFFSET	QUANTITY (FOOT)
HARRISON STREET	10+24.69 TO 10+65.71	LT	54
HARRISON STREET	10+24.31 TO 10+65.71	RT	55
ADAMS STREET	20+24.60 TO 20+62.82	LT	54
ADAMS STREET	20+37.38 TO 20+64.08	RT	26
		TOTAL	189

Hot-Mix Asphalt Bike Path

ALIGNMENT	STA. TO STA.	OFFSET	QUANTITY (SQ YD)
HARRISON STREET	15+85.40 TO 16+11.30	LT	45
HARRISON STREET	16+11.67 TO 16+39.63	LT	46
		TOTAL	91

Hot-Mix Asphalt Driveway Pavement, 3"

ALIGNMENT	STA. TO STA.	OFFSET	QUANTITY (SQ YD)
HARRISON STREET	13+00.39	RT	49
ADAMS STREET	22+87.85	LT	38
		TOTAL	87

PCC Driveway Pavement, 8"

ALIGNMENT	STA. TO STA.	OFFSET	QUANTITY (SQ YD)
HARRISON STREET	8+38.70	LT	74
		TOTAL	74

Class D Patch, Special, 3"

ALIGNMENT	STA. TO STA.	QUANTITY (SQ YD)
HARRISON STREET	3+78.48 TO 3+88.48	11 ⚠1
HARRISON STREET	4+92.44 TO 7+48.87	532
	TOTAL	543 ⚠1

Class D Patch, Special, 12.5"

ALIGNMENT	STA. TO STA.	QUANTITY (SQ YD)
HARRISON STREET	4+92.44 TO 9+44.33	204
	TOTAL	204

Integral Barrier Wall and Sidewalk

ALIGNMENT	STA. TO STA.	OFFSET	QUANTITY (SQ FT)
HARRISON STREET	14+36.40 TO 14+85.90	LT	686
		TOTAL	686

PCC Sidewalk, 5"

ALIGNMENT	STA. TO STA.	OFFSET	QUANTITY (SQ FT)
HARRISON STREET	4+92.44 TO 5+03.58	LT	55
HARRISON STREET	5+39.24 TO 5+49.24	LT	50
HARRISON STREET	7+06.98 TO 7+18.26	LT	55
HARRISON STREET	8+13.04 TO 8+22.81	LT	50
HARRISON STREET	8+54.62 TO 8+63.81	LT	45
HARRISON STREET	8+94.03 TO 9+00.07	LT	60
HARRISON STREET	10+27.80 TO 13+59.29	RT	2,561
HARRISON STREET	13+89.79 TO 14+50.00	RT	372
HARRISON STREET	14+50.00 TO 15+93.40	RT	999
ADAMS STREET	20+50.85 TO 23+47.93	LT	2,109
ADAMS STREET	22+06.94 TO 23+48.24	RT	880
ADAMS STREET	23+78.27 TO 24+50.00	LT	420
ADAMS STREET	23+80.00 TO 24+50.00	RT	426
ADAMS STREET	24+50.00 TO 26+81.99	LT	1,186
ADAMS STREET	24+50.00 TO 26+81.13	RT	1,394
JACKSON STREET	200+33.42 TO 203+12.51	LT	1,616
JACKSON STREET	200+33.42 TO 203+00.44	RT	1,675
WASHINGTON STREET	108+26.51 TO 111+07.47	LT	5,815
		TOTAL	19,768

Brick Sidewalk

ALIGNMENT	STA. TO STA.	OFFSET	QUANTITY (SQ FT)
HARRISON STREET	10+90.35 TO 11+30.35	RT	160
HARRISON STREET	13+28.00 TO 13+36.56	RT	46
ADAMS STREET	23+27.97 TO 23+31.97	RT	16
ADAMS STREET	23+30.61 TO 23+47.05	LT	177
ADAMS STREET	23+36.97 TO 23+45.56	RT	44
ADAMS STREET	23+82.86 TO 23+96.34	RT	85
ADAMS STREET	23+80.72 TO 23+96.30	LT	122
ADAMS STREET	24+01.34 TO 24+05.34	RT	16
JACKSON STREET	200+33.42 TO 200+38.42	LT	25
JACKSON STREET	200+33.42 TO 200+62.47	LT	485
JACKSON STREET	200+33.42 TO 200+72.30	RT	579
JACKSON STREET	202+17.61 TO 202+29.28	RT	151
JACKSON STREET	202+71.42 TO 203+12.49	LT	621
WASHINGTON STREET	108+22.31 TO 108+65.96	LT	398
WASHINGTON STREET	108+24.14 TO 111+10.45	LT	1,078
		TOTAL	4,003

Brick Sidewalk (Park)

ALIGNMENT	STA. TO STA.	OFFSET	QUANTITY (SQ FT)
HARRISON STREET	13+14.35 TO 14+36.40	LT	3,980
		TOTAL	3,980

Reinstall Salvaged Brick Sidewalk

ALIGNMENT	STA. TO STA.	OFFSET	QUANTITY (SQ FT)
HARRISON STREET	10+24.69 TO 10+56.01	LT	164
HARRISON STREET	11+93.61 TO 12+03.44	LT	120
HARRISON STREET	12+86.85 TO 12+94.87	LT	116
HARRISON STREET	14+37.37 TO 14+70.38	LT	424
HARRISON STREET	15+96.81 TO 16+10.90	LT	115
ADAMS STREET	26+81.77 TO 26+92.95	RT	300
		TOTAL	1,239

Segmental Concrete Block Retaining Wall

ALIGNMENT	STA. TO STA.	OFFSET	QUANTITY (SQ FT)
HARRISON STREET	10+50.50 TO 11+11.51	RT	511
HARRISON STREET	13+51.36 TO 13+63.36	LT	38
HARRISON STREET	13+87.35 TO 13+99.35	LT	38
HARRISON STREET	13+52.60 TO 13+64.60	LT	55
HARRISON STREET	13+84.60 TO 13+96.60	LT	55
WASHINGTON STREET	108+77.06 TO 109+69.00	LT	142
WASHINGTON STREET	109+78.14 TO 110+50.15	LT	97
		TOTAL	936

Detectable Warnings

ALIGNMENT	STATION	OFFSET	QUANTITY (SQ FT)
HARRISON STREET	8+16.99	30.98' LT	12
HARRISON STREET	8+59.63	30.74' LT	12
HARRISON STREET	8+97.04	19.27' LT	10
HARRISON STREET	10+31.61	26.64' RT	10
HARRISON STREET	10+32.32	26.06' LT	10
HARRISON STREET	11+52.69	20.00' RT	10
HARRISON STREET	11+98.52	32.00' LT	18
HARRISON STREET	12+90.86	32.00' LT	16
HARRISON STREET	13+39.08	15.00' LT	10
HARRISON STREET	13+39.08	16.41' RT	10
HARRISON STREET	13+55.97	30.90' RT	10
HARRISON STREET	13+93.11	30.94' RT	10
HARRISON STREET	14+10.08	15.00' LT	10
HARRISON STREET	14+10.08	16.39' RT	10
HARRISON STREET	14+60.90	32.00' LT	92
ADAMS STREET	22+94.55	33.50' RT	24
ADAMS STREET	23+32.99	20.11' LT	10
ADAMS STREET	23+34.22	19.22' RT	10
ADAMS STREET	23+43.56	30.21' LT	10
ADAMS STREET	23+44.65	29.31' RT	10
ADAMS STREET	23+81.70	30.33' LT	10
ADAMS STREET	23+83.87	28.67' RT	10
ADAMS STREET	23+98.81	16.21' LT	10
ADAMS STREET	23+98.83	16.59' RT	10
ADAMS STREET	26+87.44	15.06' RT	20
JACKSON STREET	200+66.84	33.50' LT	30
JACKSON STREET	200+85.34	33.50' RT	30
JACKSON STREET	202+58.34	33.50' LT	30
		TOTAL	464

Telescoping Steel Sign Support

ALIGNMENT	STATION	OFFSET	QUANTITY (FOOT)
HARRISON STREET	10+39.00	21.00' LT	10
HARRISON STREET	10+95.35	22.00' RT	10
HARRISON STREET	11+25.35	22.00' RT	10
HARRISON STREET	11+62.69	31.00' RT	10
HARRISON STREET	14+45.90	31.00' LT	10
HARRISON STREET	14+61.90	31.00' LT	10
HARRISON STREET	14+77.90	31.00' LT	10
ADAMS STREET	20+40.00	21.00' LT	10
ADAMS STREET	23+07.86	36.06' RT	10
ADAMS STREET	23+25.00	16.00' RT	10
ADAMS STREET	24+10.00	16.00' LT	10
JACKSON STREET	200+40.00	16.00' LT	10
JACKSON STREET	200+56.01	33.00' LT	10
JACKSON STREET	200+56.02	31.00' RT	10
JACKSON STREET	202+88.01	33.00' LT	10
		TOTAL	150

Decorative Sign Pole

ALIGNMENT	STATION	OFFSET	QUANTITY (FOOT)
HARRISON STREET	14+00.00	15.00' LT	12
HARRISON STREET	14+00.00	22.00' RT	12
		TOTAL	24

Pipe Handrail

ALIGNMENT	STA. TO STA.	OFFSET	QUANTITY (FOOT)
HARRISON STREET	13+45.10 TO 13+64.60	LT	56
HARRISON STREET	13+84.60 TO 14+04.10	LT	56
HARRISON STREET	14+37.40 TO 14+84.90	LT	76
WASHINGTON STREET	108+65.97 TO 108+75.82	LT	31
WASHINGTON STREET	109+70.03 TO 109+77.14	LT	19
WASHINGTON STREET	109+77.14 TO 110+00.18	LT	46
		TOTAL	284

Polyurea Pavement Marking Type I

ALIGNMENT	STA. TO STA.	LINE (FOOT) 4"	LINE (FOOT) 24"	LETTERS & SYMBOLS (SQ FT)
HARRISON STREET	10+00.00 TO 14+50.00	673	16	3.1
HARRISON STREET	14+50.00 TO 15+85.40	534	---	9.3
ADAMS STREET	20+00.00 TO 24+50.00	221	27	3.1
ADAMS STREET	24+50.00 TO 27+06.37	445	12	---
JACKSON STREET	200+00.00 TO 203+45.32	816	36	70.5
	TOTAL	2,689	91	86.0

Sign Panel - Type 1

ALIGNMENT	TYPE	STATION	OFFSET	QUANTITY (SQ FT)
HARRISON STREET	R1-1	10+39.00	21.00' LT	4.4
HARRISON STREET	R7-6	10+95.35	22.00' RT	1.5
HARRISON STREET	R7-6	11+25.35	22.00' RT	1.5
HARRISON STREET	R7-8	11+62.69	31.00' RT	1.5
HARRISON STREET	R7-1 101	11+62.69	31.00' RT	0.5
HARRISON STREET	R7-8	14+45.90	31.00' LT	1.5
HARRISON STREET	R7-1 101	14+45.90	31.00' LT	0.5
HARRISON STREET	R7-8	14+61.90	31.00' LT	1.5
HARRISON STREET	R7-1 101	14+61.90	31.00' LT	0.5
HARRISON STREET	JACKSON ST	14+00.00	15.00' LT	5
HARRISON STREET	HARRISON ST	14+00.00	22.00' RT	5
HARRISON STREET	JACKSON ST	14+00.00	22.00' RT	5
HARRISON STREET	R7-8	14+77.90	31.00' LT	1.5
HARRISON STREET	R7-1 101	14+77.90	31.00' LT	0.5
ADAMS STREET	R1-1	20+40.00	22.00' LT	4.4
ADAMS STREET	R7-8	22+96.77	33.25' RT	1.5
ADAMS STREET	R7-1 101	22+96.77	33.25' RT	0.5
ADAMS STREET	R1-1	23+25.00	16.00' RT	4.4
ADAMS STREET	W4-4P	23+25.00	16.00' RT	2
ADAMS STREET	R1-1	24+10.00	16.00' LT	4.4
ADAMS STREET	W4-4P	24+10.00	16.00' LT	2
JACKSON STREET	R1-1	200+40.00	16.00' LT	4.4
JACKSON STREET	R7-8	200+67.15	32.25' LT	1.5
JACKSON STREET	R7-1 101	200+67.15	32.25' LT	0.5
JACKSON STREET	R7-8	200+85.65	32.25' RT	1.5
JACKSON STREET	R7-1 101	200+85.65	32.25' RT	0.5
JACKSON STREET	R7-8	202+58.07	32.25' LT	1.5
JACKSON STREET	R7-1 101	202+58.07	32.25' LT	0.5
			TOTAL	60

Ornamental Fence

ALIGNMENT	STA. TO STA.	OFFSET	QUANTITY (FOOT)
HARRISON STREET	12+98.89 TO 13+41.01	38.26' LT	40
HARRISON STREET	13+41.01 TO 13+66.60	38.26' LT	24
HARRISON STREET	13+66.60 TO 14+08.18	38.26' LT	24
HARRISON STREET	14+08.18 TO 14+33.60	38.26' LT	24
		TOTAL	112

Stone Fence Column

ALIGNMENT	STATION	OFFSET	QUANTITY (EACH)
HARRISON STREET	12+98.89	38.26' LT	1
HARRISON STREET	13+41.01	38.26' LT	1
HARRISON STREET	14+08.18	38.26' LT	1
HARRISON STREET	14+33.60	38.26' LT	1
		TOTAL	4

Stone Arch Column

ALIGNMENT	STATION	OFFSET	QUANTITY (EACH)
HARRISON STREET	13+66.60	38.26' LT	1
HARRISON STREET	13+82.60	38.26' LT	1
		TOTAL	2

DATE	REVISIONS	ISSUE
3/1/19	ADDENDUM #1	1.
2/21/19	ISSUED FOR BIDDING	

PROJECT STAFF
PROJECT MANAGER: SCOTT TROTTER, P.E.
ENGINEER: TERRY HEITKAMP, P.E.
ENGINEER:
ENGINEER:
TECHNICIAN: MIKE DAVISON
TECHNICIAN:

TROTTER and ASSOCIATES, INC.
ENGINEERS AND SURVEYORS
40W201 Wasco Road, Suite D
St. Charles, IL 60175
Ph.: 630-587-0470 • Fax: 630-587-0475

The Reserve at Hudson Crossing - Roadway Improvements
Schedule of Quantities
Oswego, Kendall County, Illinois

Project No.: SH0002
File Name: 06_SCH_2.dgn
Issue Date: 3/1/2019
Scale: N.T.S.
Sheet Number
6

Catch Basin, Type A-1-C, 4' Dia

ALIGNMENT	STRUCTURE ID	STATION	OFFSET	QUANTITY (EACH)
HARRISON STREET	CB-1	7+14.68	29.34' LT	1
ADAMS STREET	CB-25	25+42.20	18.50' LT	1
			TOTAL	2

Catch Basin, Type A-8, 4' Dia

ALIGNMENT	STRUCTURE ID	STATION	OFFSET	QUANTITY (EACH)
ADAMS STREET	CB-21	23+00.00	43.50' RT	1
ADAMS STREET	CB-19	21+78.00	23.5' RT	1
			TOTAL	2

Catch Basin, Type A-10, 4' Dia

ALIGNMENT	STRUCTURE ID	STATION	OFFSET	QUANTITY (EACH)
HARRISON STREET	CB-2	7+17.16	17.60' LT	1
HARRISON STREET	CB-7	13+61.04	13.50' LT	1
JACKSON STREET	CB-13	201+54.19	13.50' RT	1
JACKSON STREET	CB-14	201+58.52	13.50' LT	1
			TOTAL	4

Catch Basin, Type A-11, 4' Dia

ALIGNMENT	STRUCTURE ID	STATION	OFFSET	QUANTITY (EACH)
JACKSON STREET	CB-11	200+43.51	13.50' RT	1
JACKSON STREET	CB-12	200+43.53	13.50' LT	1
ADAMS STREET	CB-17	20+79.64	13.50' RT	1
ADAMS STREET	CB-20	22+34.51	32.00' RT	1
ADAMS STREET	CB-22	23+50.08	37.64' RT	1
ADAMS STREET	CB-23	23+78.02	37.18' RT	1
ADAMS STREET	CB-24	24+41.75	32.00' RT	1
ADAMS STREET	CB-26	25+42.20	32.00' RT	1
ADAMS STREET	CB-27	26+55.15	32.00' RT	1
			TOTAL	9

Catch Basin, Type C-8, 2' Dia

ALIGNMENT	STRUCTURE ID	STATION	OFFSET	QUANTITY (EACH)
HARRISON STREET	CB-3	10+66.23	33.86' RT	1
			TOTAL	1

Catch Basin, Type C-10, 2' Dia

ALIGNMENT	STRUCTURE ID	STATION	OFFSET	QUANTITY (EACH)
HARRISON STREET	CB-8	13+48.58	13.50' LT	1
HARRISON STREET	CB-9	13+88.05	13.50' LT	1
HARRISON STREET	CB-10	14+02.17	13.50' LT	1
ADAMS STREET	CB-18	21+54.50	13.50' RT	1
			TOTAL	4

Catch Basin, Type C-11, 2' Dia

ALIGNMENT	STRUCTURE ID	STATION	OFFSET	QUANTITY (EACH)
HARRISON STREET	CB-4	11+63.19	30.50' LT	1
HARRISON STREET	CB-5	12+11.77	30.50' LT	1
HARRISON STREET	CB-6	13+12.35	30.50' LT	1
HARRISON STREET	CB-15	14+89.90	30.50' LT	1
HARRISON STREET	CB-16	15+74.40	30.50' LT	1
			TOTAL	5

Storm Manhole, Type A-1-C, 4' Dia

ALIGNMENT	STRUCTURE ID	STATION	OFFSET	QUANTITY (EACH)
HARRISON STREET	STMH-1	10+66.07	8.00' LT	1
HARRISON STREET	STMH-2	13+63.93	31.62' LT	1
JACKSON STREET	STMH-3	202+44.38	30.42' RT	1
ADAMS STREET	STMH-4	20+78.38	25.45' LT	1
ADAMS STREET	STMH-5	23+33.62	39.58' RT	1
ADAMS STREET	STMH-6	23+85.13	37.17' RT	1
			TOTAL	6

Precast Concrete Flared End Section, 12"

ALIGNMENT	STRUCTURE ID	STATION	OFFSET	QUANTITY (EACH)
HARRISON STEET	FES-2	16+84.59	28.50' LT	1
			TOTAL	1

Precast Concrete Flared End Section, 18"

ALIGNMENT	STRUCTURE ID	STATION	OFFSET	QUANTITY (EACH)
HARRISON STEET	FES-1	7+09.16	55.46' LT	1
			TOTAL	1

Precast Concrete Flared End Section, 24"

ALIGNMENT	STRUCTURE ID	STATION	OFFSET	QUANTITY (EACH)
ADAMS STREET	FES-3	27+00.69	34.65' RT	1
			TOTAL	1

Storm Sewer, Class A, Type 1, 12"

ALIGNMENT	PIPE ID	STA. TO STA.	QUANTITY (FOOT)
HARRISON STREET	SS-17	14+89.90, 30.50' LT TO 15+74.40 30.50' LT	83
HARRISON STREET	SS-18	15+74.40, 30.50' LT TO 16+84.59, 28.50' LT	107
		TOTAL	190

Storm Sewer, Class A, Type 2, 12"

ALIGNMENT	PIPE ID	STA. TO STA.	QUANTITY (FOOT)
HARRISON STREET	SS-4	10+66.07, 33.86' RT TO 10+66.23, 8.00' LT	38
HARRISON STREET	SS-5	11+63.19, 30.50' LT TO 12+11.77, 30.50 LT	47
HARRISON STREET	SS-6	12+11.77, 30.50' LT TO 13+12.35, 30.50' LT	99
HARRISON STREET	SS-7	13+12.35, 30.50' LT TO 13+63.93, 31.62' LT	49
HARRISON STREET	SS-9	13+48.58, 13.50' LT TO 13+61.04, 13.50' LT	10
HARRISON STREET	SS-10	13+61.04, 13.50' LT TO 13+88.05, 13.50' LT	24
HARRISON STREET	SS-11	13+88.05, 13.50' LT TO 14+02.17, 13.50' LT	12
JACKSON STREET	SS-12	13+61.04, 13.50' LT TO 200+43.51, 13.50' RT	51
JACKSON STREET	SS-13	200+43.53, 13.50' LT TO TRENCH DRAIN	3
JACKSON STREET	SS-14	TRENCH DRAIN TO 200+43.51, 13.50' RT	3
JACKSON STREET	SS-15	200+43.51, 13.50' RT TO 201+54.19, 13.37' RT	107
JACKSON STREET	SS-16	201+54.19, 13.50' RT TO 201+54.19, 13.50' RT	21
JACKSON STREET	SS-20	202+44.38, 30.42' RT TO 203+83.96, 30.42' RT	136
ADAMS STREET	SS-24	21+54.50, 13.50' RT TO 21+54.50, 23.00' RT	7
ADAMS STREET	SS-33	25+42.20, 18.50' LT TO 25+42.20, 34.38' RT	48
		TOTAL	655

Storm Sewer, Class B, Type 2, 12"

ALIGNMENT	PIPE ID	STA. TO STA.	QUANTITY (FOOT)
JACKSON STREET	SS-19	202+44.38, 42.24' RT TO 202+44.38, 30.42' RT	9
ADAMS STREET	SS-21	20+78.38, 35.73' RT TO 20+78.38, 25.35' RT	9
		TOTAL	18

Storm Sewer, Class A, Type 1, 15"

ALIGNMENT	PIPE ID	STA. TO STA.	QUANTITY (FOOT)
HARRISON STREET	SS-3	7+17.16, 17.60' LT TO 7+85.16, 17.60' LT	68
		TOTAL	68

Storm Sewer, Class A, Type 2, 15"

ALIGNMENT	PIPE ID	STA. TO STA.	QUANTITY (FOOT)
HARRISON STREET	SS-8	13+61.04, 13.50' LT TO 13+63.93, 31.62' LT	16
ADAMS STREET	SS-22	20+78.38, 25.45' LT TO 20+79.64, 13.50' RT	33
ADAMS STREET	SS-23	20+79.64, 13.50' RT TO 21+54.50, 23.00' RT	72
		TOTAL	121

Storm Sewer, Class A, Type 2, 18"

ALIGNMENT	PIPE ID	STA. TO STA.	QUANTITY (FOOT)
HARRISON STREET	SS-1	7+09.16, 55.46' LT TO 7+14.68, 29.34' LT	18
HARRISON STREET	SS-2	7+14.68, 29.34' LT TO 7+17.16, 17.60' LT	8
ADAMS STREET	SS-25	21+54.50, 23.00' RT TO 22+34.51, 32.00' RT	76
ADAMS STREET	SS-26	22+34.51, 32.00' RT TO 23+00.00, 43.50' RT	63
ADAMS STREET	SS-27	23+00.00, 43.50' RT TO 23+33.62, 39.58' RT	31
		TOTAL	196

Storm Sewer, Class A, Type 2, 21"

ALIGNMENT	PIPE ID	STA. TO STA.	QUANTITY (FOOT)
ADAMS STREET	SS-28	23+33.62, 39.58' RT TO 23+50.08, 37.64' RT	15
ADAMS STREET	SS-29	23+50.08, 37.64' RT TO 23+78.02, 37.18' RT	23
ADAMS STREET	SS-30	23+78.02, 37.18' RT TO 23+85.13, 37.17' RT	4
ADAMS STREET	SS-31	23+85.13, 37.17' RT TO 24+41.75, 32.00' RT	53
ADAMS STREET	SS-32	24+41.75, 32.00' RT TO 25+42.20, 32.00' RT	96
		TOTAL	191

Storm Sewer, Class A, Type 2, 24"

ALIGNMENT	PIPE ID	STA. TO STA.	QUANTITY (FOOT)
ADAMS STREET	SS-34	25+42.20, 32.00' RT TO 26+55.15, 32.00' RT	109
ADAMS STREET	SS-35	26+55.15, 32.00' RT TO 27+00.69, 34.65' RT	44
		TOTAL	153

Trench Drain - Pavement

ALIGNMENT	STA. TO STA.	QUANTITY (FOOT)
JACKSON STREET	200+43.53	20
	TOTAL	20

Trench Drain - Patio

ALIGNMENT	STA. TO STA.	QUANTITY (FOOT)
HARRISON STREET	10+66.23 TO 11+09.26	42
	TOTAL	42

Inlet Filter

ALIGNMENT	STATION	OFFSET	QUANTITY (EACH)
HARRISON STREET	5+72.16	17.14' LT	1
HARRISON STREET	6+26.50	12.33' RT	1
HARRISON STREET	7+17.16	17.60' LT	1
HARRISON STREET	7+17.76	14.03' RT	1
HARRISON STREET	7+88.66	17.53' LT	1
HARRISON STREET	7+88.70	13.87' RT	1
HARRISON STREET	7+95.79	17.47' LT	1
HARRISON STREET	10+66.23	33.86' RT	1
HARRISON STREET	11+63.19	30.50' LT	1
HARRISON STREET	12+11.77	30.50' LT	1
HARRISON STREET	13+12.35	30.50' LT	1
HARRISON STREET	13+48.58	13.50' LT	1
HARRISON STREET	13+61.04	13.50' LT	1
HARRISON STREET	13+88.05	13.50' LT	1
HARRISON STREET	14+02.17	13.50' LT	1
HARRISON STREET	14+89.90	30.50' LT	1
HARRISON STREET	15+74.40	30.50' LT	1
ADAMS STREET	20+79.64	13.50' RT	1
ADAMS STREET	21+54.50	13.50' RT	1
ADAMS STREET	21+54.50	23.00' RT	1
ADAMS STREET	22+34.51	32.00' RT	1
ADAMS STREET	23+00.00	43.50' RT	1
ADAMS STREET	23+50.08	37.64' RT	1
ADAMS STREET	23+78.02	37.18' RT	1
ADAMS STREET	24+41.75	32.00' RT	1
ADAMS STREET	25+42.20	32.00' RT	1
ADAMS STREET	26+55.15	32.00' RT	1
JACKSON STREET	200+43.51	13.50' RT	1
JACKSON STREET	200+43.53	13.50' LT	1
JACKSON STREET	201+54.19	13.50' RT	1
JACKSON STREET	201+54.19	13.50' LT	1
WASHINGTON STREET	110+28.84	24.13' LT	1
		TOTAL	32

4" Topsoil, Seeding Class 1A and Erosion Control Blanket

ALIGNMENT	STA. TO STA.	QUANTITY (SQ YD)
HARRISON STREET	10+00.00 TO 17+00.00	337
ADAMS STREET	20+00.00 TO 24+50.00	87
ADAMS STREET	24+50.00 TO 27+50.00	504
JACKSON STREET	200+00.00 TO 204+00.00	504
COMPENSATORY STORAGE POND		921
	TOTAL	2,353

4" Topsoil, Seeding Class 4B

LOCATION	QUANTITY (SQ YD)
COMPENSATORY STORAGE POND	1,471
TOTAL	1,471

Sodding, Salt Tolerant

ALIGNMENT	STA. TO STA.	QUANTITY (SQ YD)
HARRISON STREET	5+00.00 TO 10+00.00	286
HARRISON STREET	10+00.00 TO 17+00.00	849
ADAMS STREET	20+00.00 TO 24+50.00	1,085
ADAMS STREET	24+50.00 TO 27+50.00	594
	TOTAL	2,814

Perimeter Erosion Barrier

ALIGNMENT	STA. TO STA.	QUANTITY (FOOT)
HARRISON STREET	5+00.00 TO 10+00.00	47
HARRISON STREET	10+00.00 TO 17+00.00	638
ADAMS STREET	20+00.00 TO 24+50.00	400
ADAMS STREET	24+50.00 TO 27+50.00	453
JACKSON STREET	200+00.00 TO 204+00.00	249
	TOTAL	1,787

ISSUE	REVISIONS	DATE
1.	ADDENDUM #1	3/1/19
	ISSUED FOR BIDDING	2/21/19

PROJECT STAFF
PROJECT MANAGER: SCOTT TROTTER, P.E.
ENGINEER: TERRY HEITKAMP, P.E.
ENGINEER:
ENGINEER:
TECHNICIAN: MIKE DAVISON
TECHNICIAN:

TROTTER and ASSOCIATES, INC.
ENGINEERS AND SURVEYORS
40W201 Wasco Road, Suite D
St. Charles, Il. 60175
Ph.: 630-587-0470 • Fax: 630-587-0475

The Reserve at Hudson Crossing - Roadway Improvements
Schedule of Quantities
Oswego, Kendall County, Illinois

Project No.: SH0002
File Name: 07_SCH_3.dgn
Issue Date: 3/1/2019
Scale: N.T.S.
Sheet Number
7

Sanitary Manhole, Type A-1-C, 4' Dia

ALIGNMENT	STRUCTURE ID	STATION	OFFSET	QUANTITY (EACH)
HARRISON STREET	SNMH-1	5+01.68	20.85' LT	1
HARRISON STREET	SNMH-3	10+56.02	0.12' LT	1
HARRISON STREET	SNMH-4	12+11.77	0.00' RT	1
HARRISON STREET	SNMH-5	12+11.77	40.18' RT	1
HARRISON STREET	SNMH-6	13+74.60	0.00' RT	1
HARRISON STREET	SNMH-8	14+42.47	40.51' RT	1
JACKSON STREET	SNMH-9	201+68.00	0.00' RT	1
JACKSON STREET	SNMH-10	201+68.00	52.18' LT	1
JACKSON STREET	SNMH-11	201+68.04	37.09' RT	1
JACKSON STREET	SNMH-12	203+50.32	0.00' RT	1
ADAMS STREET	SNMH-13	21+90.00	5.00' RT	1
ADAMS STREET	SNMH-14	26+70.00	5.00' RT	1
			TOTAL	12

Sanitary Manhole, Type C-1-C, 4' Dia

ALIGNMENT	STRUCTURE ID	STATION	OFFSET	QUANTITY (EACH)
HARRISON STREET	SNMH-7	14+42.47	0.00' RT	1
			TOTAL	1

Sanitary Drop Manhole, Type A-1-C, 4' Dia

ALIGNMENT	STRUCTURE ID	STATION	OFFSET	QUANTITY (EACH)
HARRISON STREET	SNMH-2	8+45.07	23.66' LT	1
			TOTAL	1

Sanitary Grease Interceptor - 1,500 Gallon

ALIGNMENT	STATION	OFFSET	QUANTITY (EACH)
HARRISON STREET	10+51.47	38.00' RT	1
		TOTAL	1

Sanitary Sewer Service, PVC, 6"

ALIGNMENT	PIPE ID	STA. TO STA.	QUANTITY (FOOT)
HARRISON STREET	SN-4	10+56.02, 0.12' LT TO 10+52.08, 31.53' RT	32
HARRISON STREET	SN-5	10+50.87, 44.48' RT TO 10+72.26, 56.61' RT	25
HARRISON STREET	SERVICE	14+39.47, 34.97' LT TO 14+39.47, 0.00' RT	35
		TOTAL	92

Sanitary Sewer, PVC, 8" (SDR-26)

ALIGNMENT	PIPE ID	STA. TO STA.	QUANTITY (FOOT)
JACKSON STREET	SN-13	201+68.00, 0.00' RT TO 201+68.00, 42.00' RT	42
		TOTAL	42

Sanitary Sewer, PVC, 10" (SDR-26)

ALIGNMENT	PIPE ID	STA. TO STA.	QUANTITY (FOOT)
JACKSON STREET	SN-14	201+68.00, 0.00' RT TO 203+50.32, 0.00' RT	182
ADAMS STREET	SN-15	21+90.00, 5.00' RT TO 23+62.82, 5.00' RT	173
ADAMS STREET	SN-16	23+62.82, 5.00' RT TO 26+70.00, 5.00' RT	307
		TOTAL	662

Sanitary Sewer, PVC, 12" (SDR-26)

ALIGNMENT	PIPE ID	STA. TO STA.	QUANTITY (FOOT)
HARRISON STREET	SN-1	PUMP STATION TO 5+01.68, 20.85' LT	94
HARRISON STREET	SN-2	5+01.68, 20.85' LT TO 8+45.07, 23.66' LT	343
HARRISON STREET	SN-3	8+45.07, 23.66' LT TO 10+56.02, 0.12' LT	212
HARRISON STREET	SN-6	10+56.02, 0.12' LT TO 12+11.77, 0.00' RT	156
HARRISON STREET	SN-7	12+11.77, 0.00' RT TO 12+11.77, 43.00' RT	43
HARRISON STREET	SN-8	12+11.77, 0.00' RT TO 13+74.60, 0.00' RT	163
HARRISON STREET	SN-9	13+74.60, 0.00' RT TO 14+42.27, 0.00' RT	68
HARRISON STREET	SN-10	14+42.27, 0.00' RT TO 14+42.27, 44.50' RT	45
JACKSON STREET	SN-11	200+00.00, 0.00' RT TO 201+68.00, 0.00' RT	168
JACKSON STREET	SN-12	201+68.00, 0.00' RT TO 201+68.00, 56.00' LT	56
		TOTAL	1,348

Jack and Bore Steel Casing, 30"

ALIGNMENT	STA. TO STA.	QUANTITY (FOOT)
HARRISON STREET	9+42.61 TO 10+46.25	105
	TOTAL	105

Valve Vault, Type A-1-C, 5' Dia w/ 8" Gate Valve

ALIGNMENT	STRUCTURE ID	STATION	OFFSET	QUANTITY (EACH)
WASHINGTON STREET	VV-10	108+13.00	43.91' LT	1
			TOTAL	1

Valve Vault, Type A-1-C, 5' Dia w/ 10" Gate Valve

ALIGNMENT	STRUCTURE ID	STATION	OFFSET	QUANTITY (EACH)
HARRISON STREET	VV-2	10+38.47	8.16' RT	1
HARRISON STREET	VV-3	13+98.18	10.00' RT	1
JACKSON STREET	VV-4	200+14.98	18.60' LT	1
JACKSON STREET	VV-5	203+45.33	18.60' LT	1
ADAMS STREET	VV-6	23+76.41	5.00' LT	1
ADAMS STREET	VV-7	23+86.41	5.00' LT	1
			TOTAL	6

Valve Vault, Type A-1-C, 5' Dia w/ 12" Gate Valve

ALIGNMENT	STRUCTURE ID	STATION	OFFSET	QUANTITY (EACH)
HARRISON STREET	VV-1	5+44.24	34.20' LT	1
			TOTAL	1

Valve Box w/ 10" Gate Valve

ALIGNMENT	STRUCTURE ID	STATION	OFFSET	QUANTITY (EACH)
HARRISON STREET	VNB-1	11+87.95	41.18' RT	1
JACKSON STREET	VNB-2	201+78.00	54.18' LT	1
			TOTAL	2

Fire Hydrant, Complete Assembly

ALIGNMENT	STRUCTURE ID	STATION	OFFSET	QUANTITY (EACH)
HARRISON STREET	FH-1	10+78.00	19.19' RT	1
HARRISON STREET	FH-2	12+80.00	21.50' RT	1
HARRISON STREET	FH-3	14+32.47	21.91' RT	1
JACKSON STREET	FH-4	203+04.51	14.60' LT	1
ADAMS STREET	FH-5	20+92.00	16.50' LT	1
ADAMS STREET	FH-6	26+52.50	22.21' LT	1
WASHINGTON STREET	FH-7	109+65.49	35.50' LT	1
			TOTAL	7

Ductile Iron Water Main, 8"

ALIGNMENT	STA. TO STA.	QUANTITY (FOOT)
WASHINGTON STREET	108+03.18 TO 111+19.75	320
	TOTAL	320

Ductile Iron Water Main, 10"

ALIGNMENT	STA. TO STA.	QUANTITY (FOOT)
HARRISON STREET	10+33.50 TO 14+32.47	398
HARRISON STREET	11+87.95, 10.00' RT TO 43.00' RT	33
JACKSON STREET	200+09.98 TO 203+95.01	388
JACKSON STREET	201+78.00, 18.60' LT TO 56.50' LT	38
ADAMS STREET	20+43.30 TO 24+50.00	407
ADAMS STREET	24+50.00 TO 26+88.43	256
	TOTAL	1,520

Steel Casing, 20"

ALIGNMENT	STA. TO STA.	QUANTITY (FOOT)
HARRISON STREET	10+46 TO 10+76	30
HARRISON STREET	12+01 TO 12+22	21
HARRISON STREET	13+51 TO 13+86	35
JACKSON STREET	203+72 TO 203+93	21
ADAMS STREET	20+68.56 TO 20+89.56	21
ADAMS STREET	23+21.72 TO 23+42.73	21
ADAMS STREET	25+31.70 TO 25+52.70	21
WASHINGTON STREET	108+20.7 TO 108+46.7	26
	TOTAL	196

Steel Casing, 30"

ALIGNMENT	STA. TO STA.	QUANTITY (FOOT)
HARRISON STREET	5+44.24, 10.70' LT TO 5+44.24, 31.70' LT	21
	TOTAL	21

Adjusting Water Main, Special, 12"

ALIGNMENT	STA. TO STA.	QUANTITY (FOOT)
WASHINGTON STREET	5+44.24, 39.20' LT TO 3.20' LT	36
	TOTAL	36

Water Service, Special, 1"

ALIGNMENT	STA. TO STA.	QUANTITY (FOOT)
HARRISON STREET	12+72.83, 34.98' LT TO 12+72.83, 10.00' RT	45
HARRISON STREET	14+29.47, 34.98' LT TO 14+29.47, 10.00' RT	45
	TOTAL	90

Connection to Existing Water Main, 6"

ALIGNMENT	STATION	OFFSET	QUANTITY (EACH)
ADAMS STREET	26+88.43	16.11' RT	1
		TOTAL	1

Connection to Existing Water Main, 10"

ALIGNMENT	STATION	OFFSET	QUANTITY (EACH)
HARRISON STREET	10+33.50	7.70' RT	1
JACKSON STREET	203+95.01	10.27' RT	1
		TOTAL	2

Precast Concrete Transformer Pad

ALIGNMENT	STATION	OFFSET	QUANTITY (EACH)
HARRISON STREET	11+15.67	35.50' RT	1
HARRISON STREET	11+23.67	35.50' RT	1
HARRISON STREET	14+17.57	25.00' RT	1
HARRISON STREET	14+25.57	25.00' RT	1
		TOTAL	4

Precast Concrete Switchgear Pad

ALIGNMENT	STATION	OFFSET	QUANTITY (EACH)
ADAMS STREET	23+23.14	21.22' RT	1
		TOTAL	1

Electric Splice Box

ALIGNMENT	STATION	OFFSET	QUANTITY (EACH)
HARRISON STREET	13+49.55	40.44' RT	1
		TOTAL	1

Electric Cable in Conduit, 500 CU - 400 Amp Secondary Cable

ALIGNMENT	STA. TO STA.	QUANTITY (FOOT)
HARRISON STREET	14+09.08, 52.53' LT TO 14+25.57, 25.00' RT	100
	TOTAL	100

Underground Conduit, 4" Sch. 40 PVC

ALIGNMENT	STA. TO STA.	QUANTITY (FOOT)
HARRISON STREET	14+09.08, 52.53' LT TO 14+25.57, 25.00' RT	85
ADAMS STREET	23+46.66, 34.75' RT TO 26+40.81, 17.49' LT	382
	TOTAL	467

Underground Conduit, 6" Sch. 40 PVC

ALIGNMENT	STA. TO STA.	QUANTITY (FOOT)
HARRISON STREET	10+68.93, 115.76' RT TO 11+15.67, 35.50' RT	193
HARRISON STREET	11+15.67, 35.50' RT TO 11+23.67, 35.50' RT	8
HARRISON STREET	11+23.67, 35.50' RT TO 14+17.57, 25.00' RT	297
HARRISON STREET	14+17.57, 25.00' RT TO 14+25.57, 25.00' RT	8
HARRISON STREET	10+68.93, 74.13' LT TO 13+49.55, 40.44' RT	388
JACKSON STREET	200+40.47, 25.00' RT TO 203+65.29, 40.32' RT	329
JACKSON STREET	200+40.47, 25.00' RT TO 203+79.55, 17.24' RT	28
ADAMS STREET	111+11.28, 101.83' RT TO 23+23.14, 21.22' RT	467
ADAMS STREET	23+23.14, 21.22' RT TO 26+40.81, 17.49' LT	355
	TOTAL	2,073

Connection to Utility Pole

ALIGNMENT	STATION	OFFSET	QUANTITY (EACH)
HARRISON STREET	10+68.93	74.13' LT	1
HARRISON STREET	10+68.93	115.76' LT	1
JACKSON STREET	23+46.66	34.75' RT	1
JACKSON STREET	23+46.66	34.75' RT	1
ADAMS STREET	26+40.81	5.00' LT	1
ADAMS STREET	26+40.81	5.00' LT	1
WASHINGTON STREET	111+11.28	101.83' RT	1
		TOTAL	7

DATE	REVISIONS	ISSUE
3/1/19	ADDENDUM #1	1.
2/21/19	ISSUED FOR BIDDING	

PROJECT STAFF
PROJECT MANAGER: SCOTT TROTTER, P.E.
ENGINEER: TERRY HEITKAMP, P.E.
ENGINEER:
ENGINEER:
TECHNICIAN: MIKE DAVISON
TECHNICIAN:

TROTTER and ASSOCIATES, INC.
ENGINEERS AND SURVEYORS
40W201 Wasco Road, Suite D
St. Charles, Il. 60175
Ph.: 630-587-0470 • Fax: 630-587-0475

The Reserve at Hudson Crossing - Roadway Improvements
Schedule of Quantities
Oswego, Kendall County, Illinois

Project No.: SH0002
File Name: 08_SCH_4.dgn
Issue Date: 3/1/2019
Scale: N.T.S.
Sheet Number
8

Removal Legend

- ITEM TO BE REMOVED
- TREE REMOVAL
- UTILITY REMOVAL / ABANDONMENT
- HMA PAVEMENT REMOVAL
- CONCRETE REMOVAL
- BRICK REMOVAL
- EXISTING RIGHT OF WAY
- TEMPORARY CONSTRUCTION EASEMENT

SCALE: 1" = 20' (20 0 20 40 FEET)

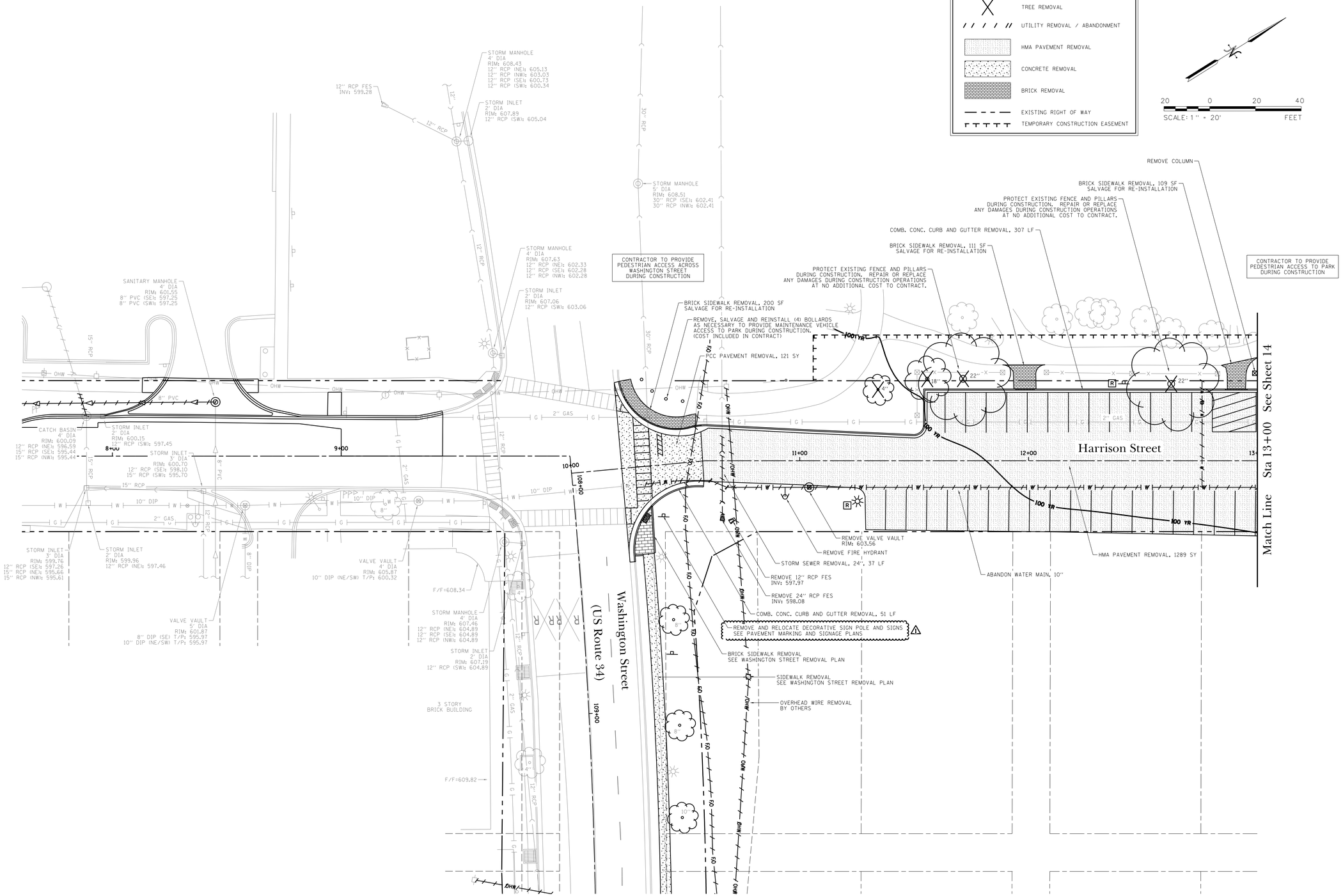

DATE	REVISIONS	ISSUE
3/1/19	ADDENDUM #1	1.
2/21/19	ISSUED FOR BIDDING	

PROJECT STAFF
PROJECT MANAGER: SCOTT TROTTER, P.E.
ENGINEER: TERRY HITEKMP, P.E.
ENGINEER:
ENGINEER:
TECHNICIAN: MIKE HAYSON
TECHNICIAN:

TROTTER ASSOCIATES, INC.
ENGINEERS AND SURVEYORS
409/201 Veterans Boulevard, Suite D
Yorkville, Illinois 60560
Ph. 630-387-0170 • Fax: 630-387-0175

The Reserve at Hudson Crossing - Roadway Improvements

Removal Plan - Harrison Street

Oswego, Kendall County, Illinois

Project No.:	SH0002
File Name:	16_REM_HAR.dgn
Issue Date:	3/1/2019
Scale:	1" = 20'
Sheet Number	16

Removal Legend

- R — ITEM TO BE REMOVED
- TREE REMOVAL
- UTILITY REMOVAL / ABANDONMENT
- HMA PAVEMENT REMOVAL
- CONCRETE REMOVAL
- BRICK REMOVAL
- EXISTING RIGHT OF WAY
- TEMPORARY CONSTRUCTION EASEMENT

20 0 20 40
SCALE: 1" = 20' FEET

DATE	REVISIONS	ISSUE
3/1/19	ADDENDUM #1	1.
2/21/19	ISSUED FOR BIDDING	

PROJECT STAFF
PROJECT MANAGER: SCOTT TROTTER, P.E.
ENGINEER: TERRY THEYKAMP, P.E.
ENGINEER:
ENGINEER:
TECHNICIAN: MIKE DAVISON
TECHNICIAN:

TROTTER ASSOCIATES, INC.
ENGINEERS AND SURVEYORS
400 N.W. Union Bandit, Suite D
Oswego, Illinois 60543
Ph. 630-587-0170 • Fax 630-587-0175

The Reserve at Hudson Crossing - Roadway Improvements

Removal Plan - Adams Street

Oswego, Kendall County, Illinois

Project No.: SH0002
File Name: 18_REM_ADAMS.dgn
Issue Date: 3/1/2019
Scale: 1" = 20'
Sheet Number
18

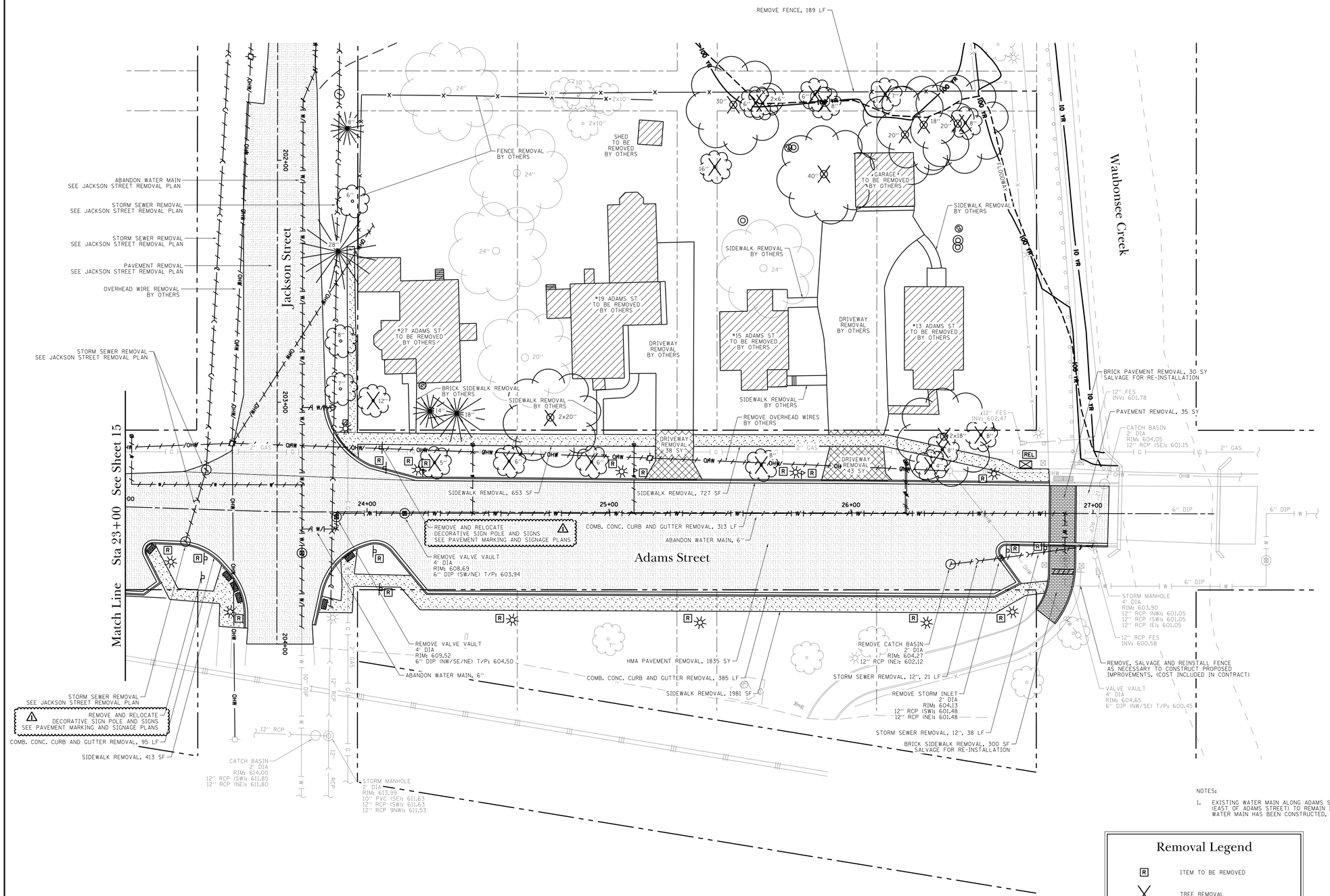

NOTES:

1. EXISTING WATER MAIN ALONG ADAMS STREET & JACKSON STREET (EAST OF ADAMS STREET) TO REMAIN IN OPERATION UNTIL PROPOSED WATER MAIN HAS BEEN CONSTRUCTED, TESTED, AND ACCEPTED.

Removal Legend

- ITEM TO BE REMOVED
- TREE REMOVAL
- UTILITY REMOVAL / ABANDONMENT
- HMA PAVEMENT REMOVAL
- CONCRETE REMOVAL
- BRICK REMOVAL
- EXISTING RIGHT OF WAY
- TEMPORARY CONSTRUCTION EASEMENT

20 0 20 40
SCALE: 1" = 20' FEET

ISSUE	REVISIONS	DATE
1.	ADDENDUM #1	3/1/19
	ISSUED FOR BIDDING	2/21/19

PROJECT STAFF
PROJECT MANAGER: SCOTT TROTTER, P.E.
ENGINEER: TERRY HITEKAMP, P.E.
ENGINEER:
ENGINEER:
TECHNICIAN: MIKE HAYSON
TECHNICIAN:

TROTTER ASSOCIATES, INC.
ENGINEERS AND SURVEYORS
4109 W. Verson Road, Suite D
Yorkville, Illinois 60560
Ph: 630-587-0170 • Fax: 630-587-0175

The Reserve at Hudson Crossing - Roadway Improvements

Removal Plan - Adams Street

Oswego, Kendall County, Illinois

Project No.: SH0002
File Name: 19_REM_ADAMS.dgn
Issue Date: 3/1/2019
Scale: 1" = 20'
Sheet Number
19

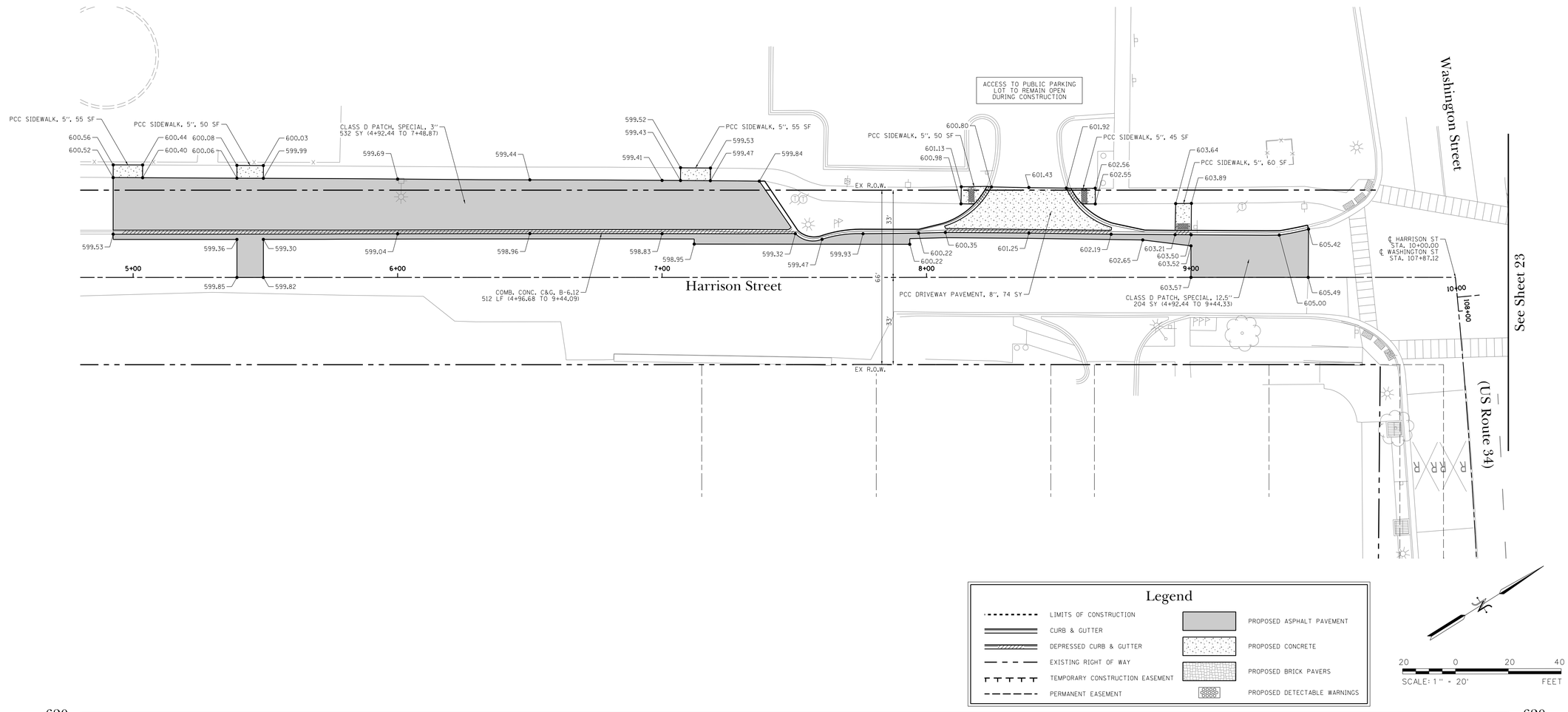

Legend

- LIMITS OF CONSTRUCTION
- CURB & GUTTER
- DEPRESSED CURB & GUTTER
- EXISTING RIGHT OF WAY
- TEMPORARY CONSTRUCTION EASEMENT
- PERMANENT EASEMENT
- PROPOSED ASPHALT PAVEMENT
- PROPOSED CONCRETE
- PROPOSED BRICK PAVERS
- PROPOSED DETECTABLE WARNINGS

20 0 20 40
SCALE: 1" = 20' FEET

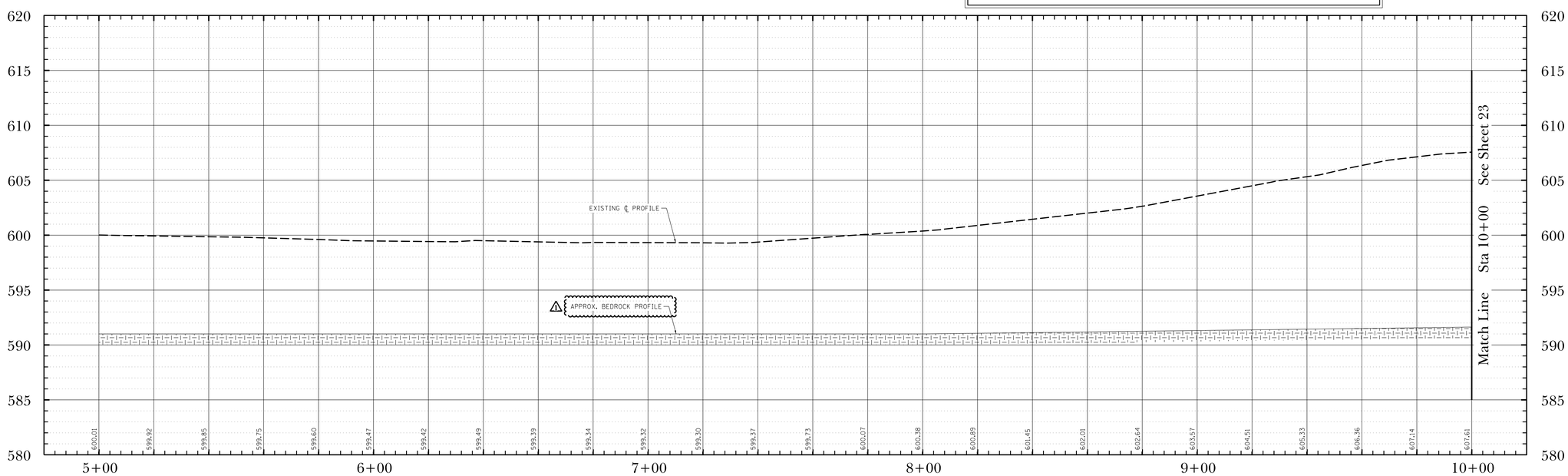

DATE	REVISIONS	ISSUE
3/1/19	ADDENDUM #1	1.
2/21/19	ISSUED FOR BIDDING	

PROJECT STAFF
PROJECT MANAGER: SCOTT TROTTER, P.E.
ENGINEER: TERRY THEYKAMP, P.E.
ENGINEER:
ENGINEER:
TECHNICIAN: MIKE DAVISON
TECHNICIAN:

TROTTER ASSOCIATES, INC.
ENGINEERS AND SURVEYORS
400 W. Union Road, Suite D
Oswego, Illinois 60543
Ph. 630-587-0170 • Fax 630-587-0175

The Reserve at Hudson Crossing - Roadway Improvements
Roadway Plan and Profile
Harrison Street Sta 5+00 to Sta 10+00
Oswego, Kendall County, Illinois

Project No.: SH0002
File Name: 22_P&P_HAR.dgn
Issue Date: 3/1/2019
Scale: HORIZ: 1" = 20' VERT: 1" = 5'
Sheet Number
22

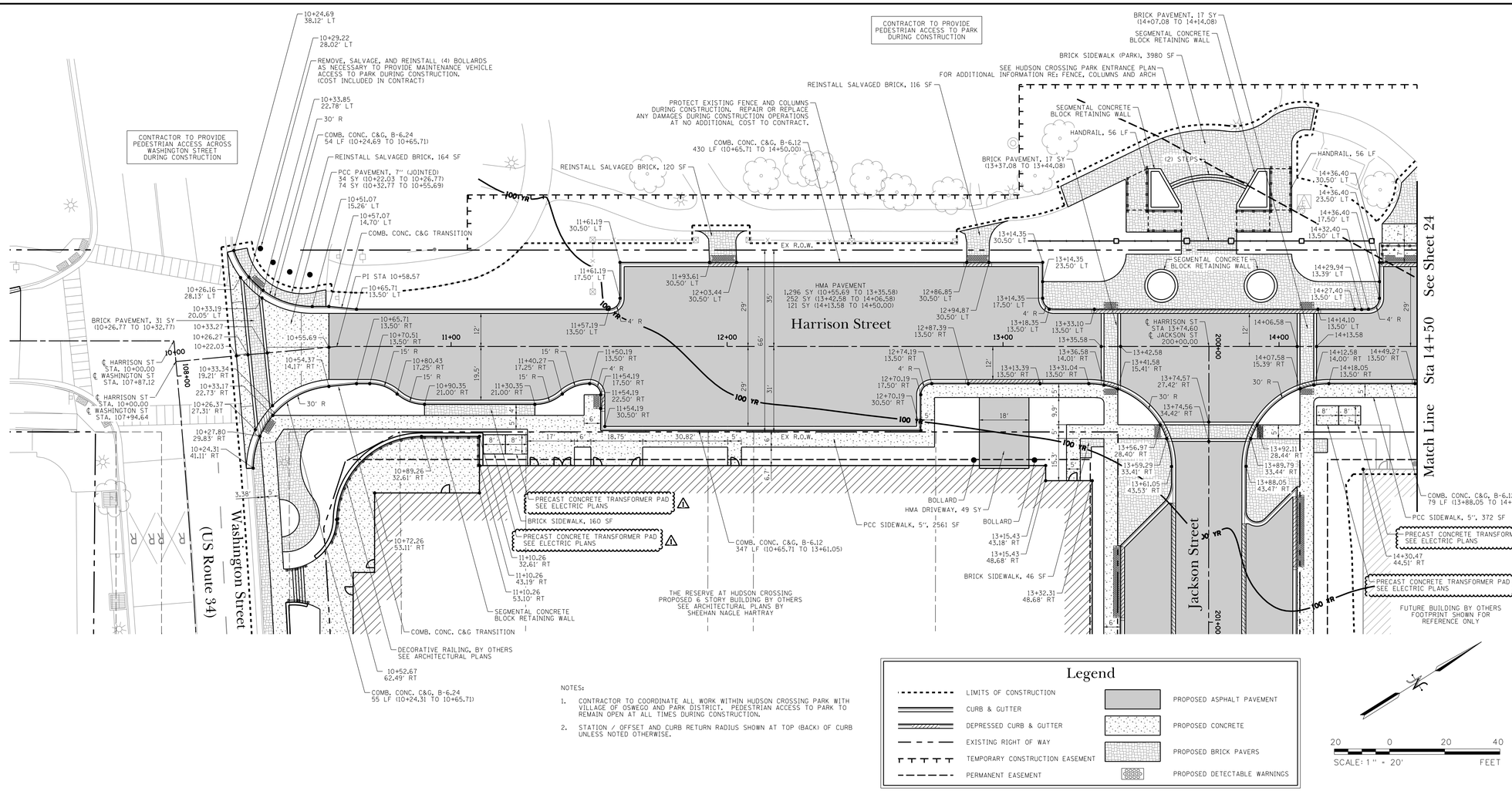

NOTES:

1. CONTRACTOR TO COORDINATE ALL WORK WITHIN HUDSON CROSSING PARK WITH VILLAGE OF OSWEGO AND PARK DISTRICT. PEDESTRIAN ACCESS TO PARK TO REMAIN OPEN AT ALL TIMES DURING CONSTRUCTION.
2. STATION / OFFSET AND CURB RETURN RADIUS SHOWN AT TOP (BACK) OF CURB UNLESS NOTED OTHERWISE.

Legend

- LIMITS OF CONSTRUCTION
- CURB & GUTTER
- DEPRESSED CURB & GUTTER
- EXISTING RIGHT OF WAY
- TEMPORARY CONSTRUCTION EASEMENT
- PERMANENT EASEMENT
- PROPOSED ASPHALT PAVEMENT
- PROPOSED CONCRETE
- PROPOSED BRICK PAVERS
- PROPOSED DETECTABLE WARNINGS

SCALE: 1" = 20' (20 0 20 40 FEET)

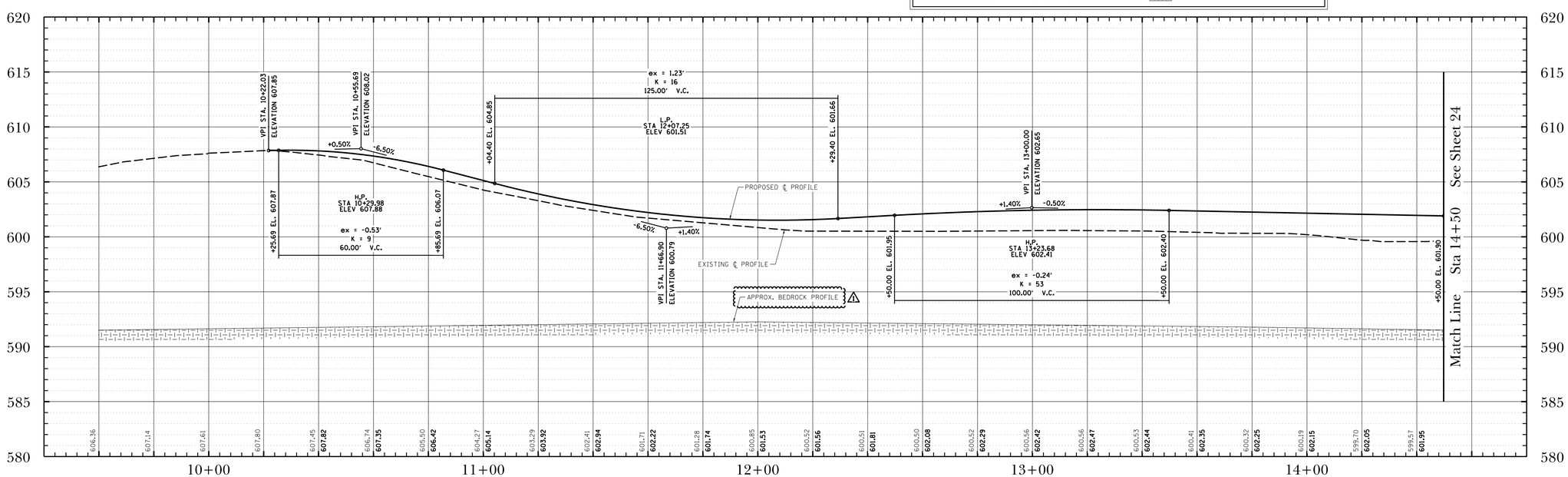

DATE	REVISIONS	ISSUE
3/1/19	ADDENDUM #1	1.
2/21/19	ISSUED FOR BIDDING	

PROJECT STAFF
PROJECT MANAGER: SCOTT TROTTER, P.E.
ENGINEER: TERRY HEFFERNAN, P.E.
ENGINEER:
ENGINEER:
TECHNICIAN: MIKE DAVISON
TECHNICIAN:

TROTTER ASSOCIATES, INC.
ENGINEERS AND SURVEYORS
409/201 Veterans Realty Suite D
Yorkville, Illinois 60560
Ph. 630-387-0170 • Fax 630-387-0175

The Reserve at Hudson Crossing - Roadway Improvements
Roadway Plan and Profile
Harrison Street Sta 10+00 to Sta 14+50
Oswego, Kendall County, Illinois

Project No.: SH0002
File Name: 23_P&P_HAR.dgn
Issue Date: 3/1/2019
Scale: HORIZ: 1" = 20' VERT: 1" = 5'
Sheet Number
23

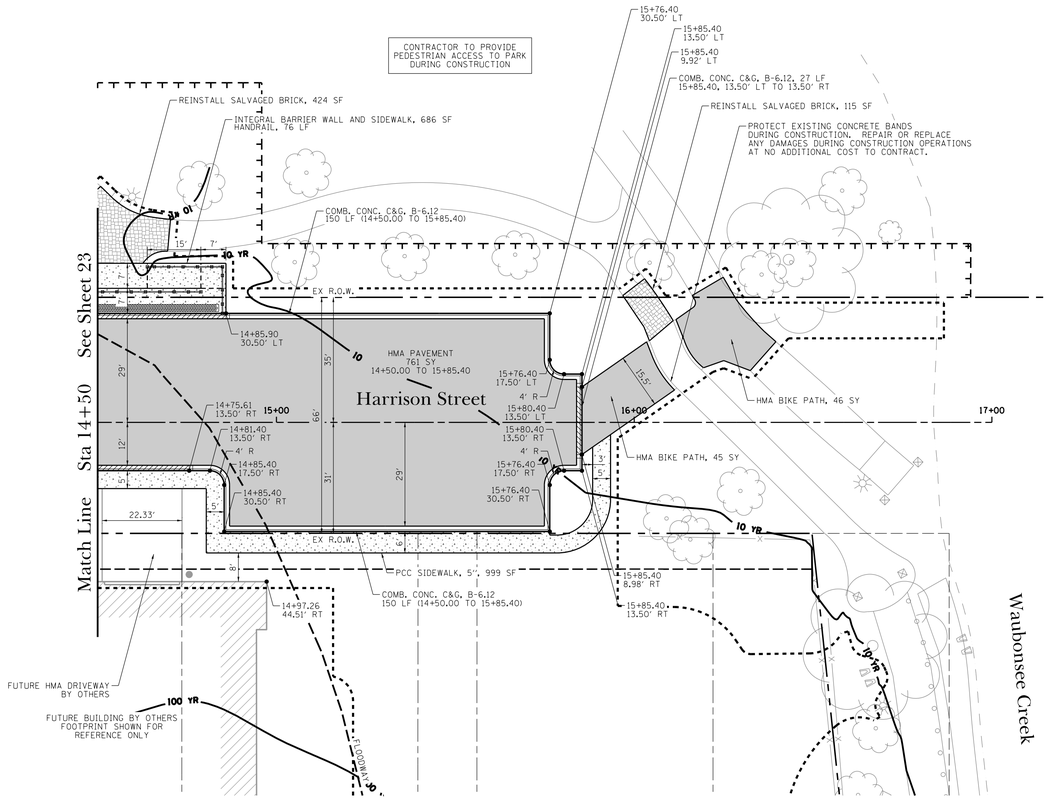

NOTES:

1. CONTRACTOR TO COORDINATE ALL WORK WITHIN HUDSON CROSSING PARK WITH VILLAGE OF OSWEGO AND PARK DISTRICT. PEDESTRIAN ACCESS TO PARK TO REMAIN OPEN AT ALL TIMES DURING CONSTRUCTION.
2. STATION / OFFSET AND CURB RETURN RADIUS SHOWN AT TOP (BACK) OF CURB UNLESS NOTED OTHERWISE.

Legend

- LIMITS OF CONSTRUCTION
- CURB & GUTTER
- DEPRESSED CURB & GUTTER
- EXISTING RIGHT OF WAY
- TEMPORARY CONSTRUCTION EASEMENT
- PERMANENT EASEMENT
- PROPOSED ASPHALT PAVEMENT
- PROPOSED CONCRETE
- PROPOSED BRICK PAVERS
- PROPOSED DETECTABLE WARNINGS

20 0 20 40
SCALE: 1" = 20' FEET

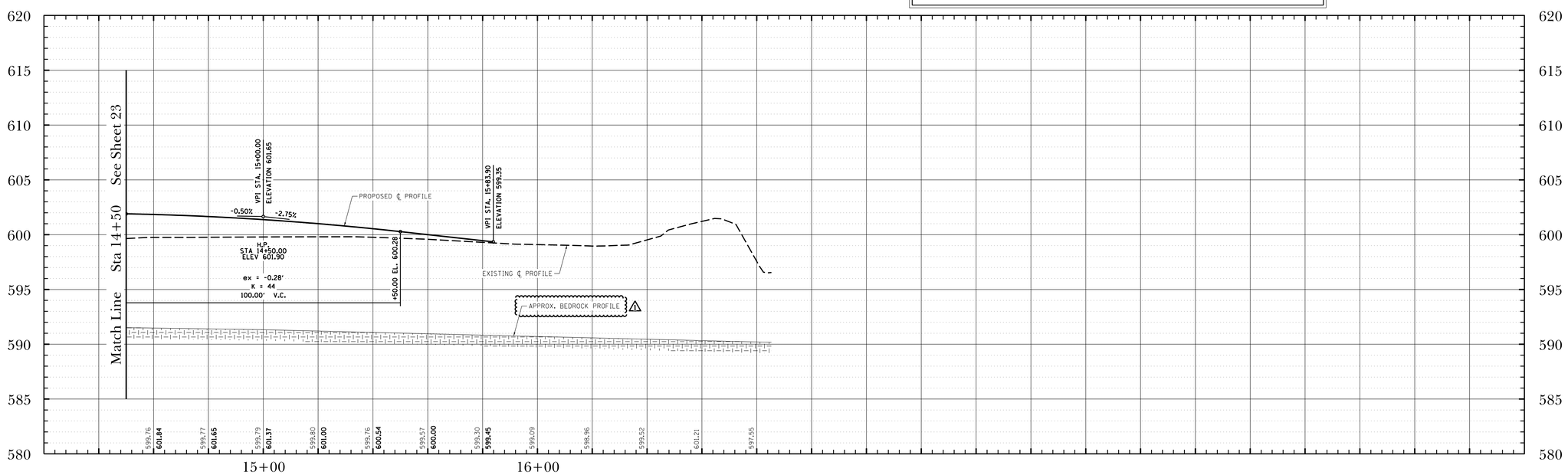

DATE	REVISIONS	ISSUE
3/1/19	ADDENDUM #1	1.
2/21/19	ISSUED FOR BIDDING	

PROJECT STAFF

PROJECT MANAGER:	SCOTT TROTTER, P.E.
ENGINEER:	TERRY THEYKAMP, P.E.
ENGINEER:	
ENGINEER:	
TECHNICIAN:	MIKE DAVISON
TECHNICIAN:	

TROTTER ASSOCIATES, INC.
ENGINEERS AND SURVEYORS
400 W. Velasco Roadt, Suite D
Oswego, Illinois 60543
Ph. 630-587-0170 • Fax 630-587-0175

The Reserve at Hudson Crossing - Roadway Improvements
Roadway Plan and Profile
Harrison Street Sta 14+50 to Sta 17+00
Oswego, Kendall County, Illinois

Project No.:	SH0002
File Name:	24_P&P_HAR.dgn
Issue Date:	3/1/2019
Scale:	HORIZ: 1" = 20' VERT: 1" = 5'
Sheet Number	24

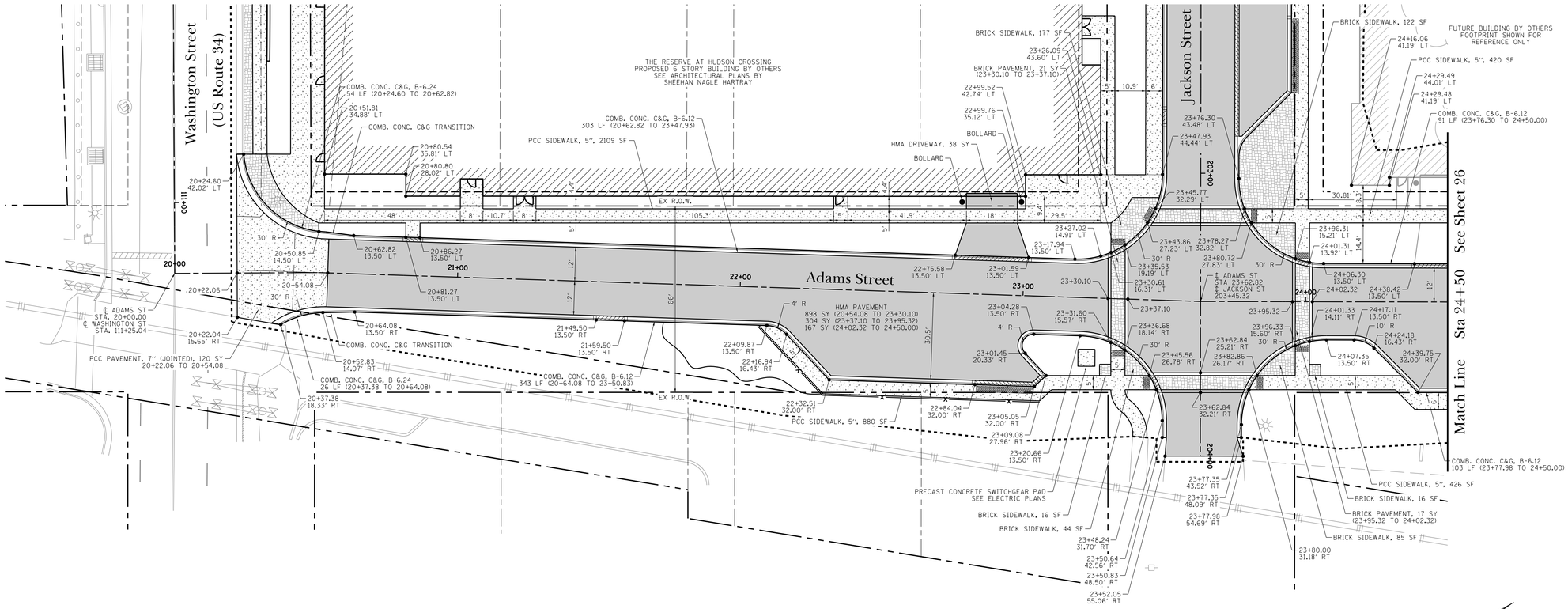

NOTES:

1. STATION / OFFSET AND CURB RETURN RADIUS SHOWN AT TOP (BACK) OF CURB UNLESS NOTED OTHERWISE.

Legend

- LIMITS OF CONSTRUCTION
- CURB & GUTTER
- DEPRESSED CURB & GUTTER
- EXISTING RIGHT OF WAY
- TEMPORARY CONSTRUCTION EASEMENT
- PERMANENT EASEMENT
- PROPOSED ASPHALT PAVEMENT
- PROPOSED CONCRETE
- PROPOSED BRICK PAVERS
- PROPOSED DETECTABLE WARNINGS

20 0 20 40
SCALE: 1" = 20' FEET

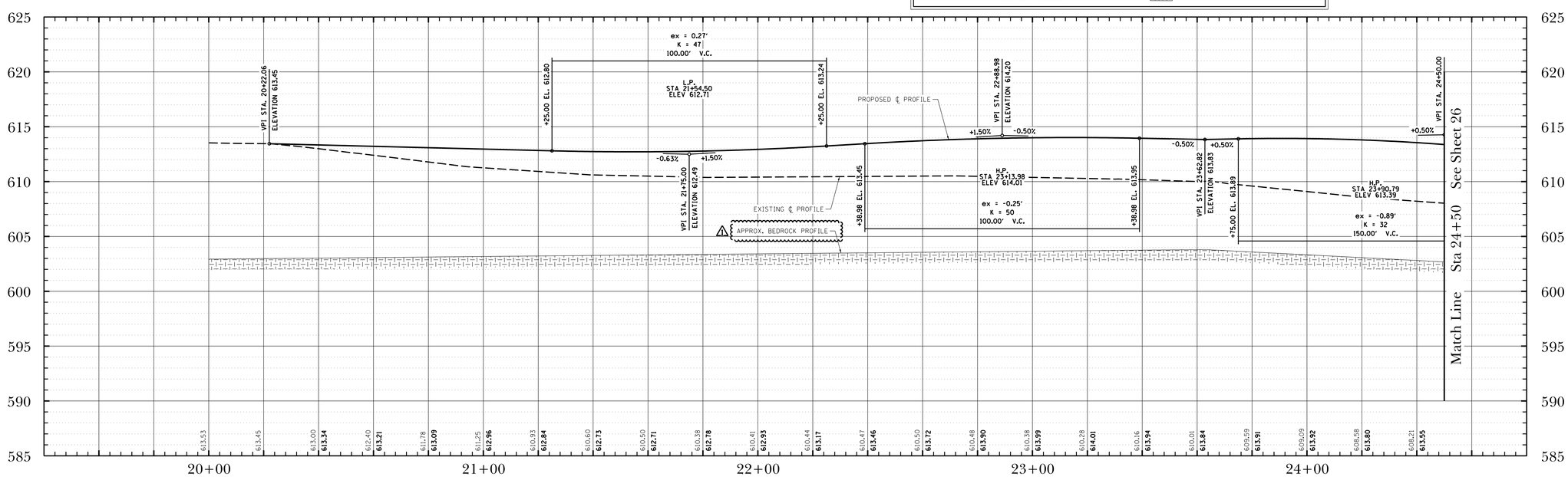

DATE	REVISIONS	ISSUE
3/1/19	ADDENDUM #1	1.
2/21/19	ISSUED FOR BIDDING	

PROJECT STAFF
PROJECT MANAGER: SCOTT TROTTER, P.E.
ENGINEER: TERRY THEYSKAMP, P.E.
ENGINEER:
ENGINEER:
TECHNICIAN: MIKE DAVISON
TECHNICIAN:

TROTTER ASSOCIATES, INC.
ENGINEERS AND SURVEYORS
409/201 Veterans Roadd, Suite D
Bloomingdale, Illinois 60108
Ph. 630-587-0170 • Fax: 630-587-0175

The Reserve at Hudson Crossing - Roadway Improvements
Roadway Plan and Profile
Adams Street Sta 20+00 to Sta 24+50
Oswego, Kendall County, Illinois

Project No.: SH0002
File Name: 25_P&P_ADAMS.dgn
Issue Date: 3/1/2019
Scale: HORIZ: 1" = 20' VERT: 1" = 5'
Sheet Number
25

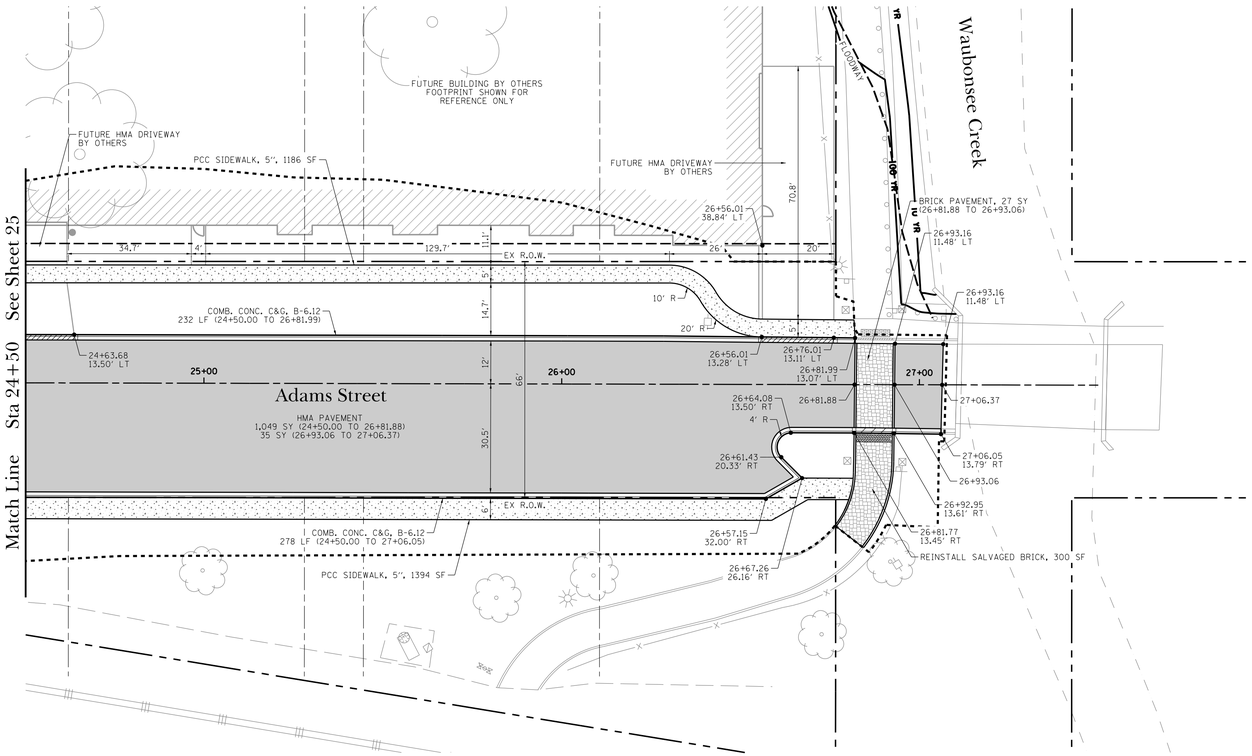

NOTES:

1. STATION / OFFSET AND CURB RETURN RADIUS SHOWN AT TOP (BACK) OF CURB UNLESS NOTED OTHERWISE.

Legend

- LIMITS OF CONSTRUCTION
- CURB & GUTTER
- DEPRESSED CURB & GUTTER
- EXISTING RIGHT OF WAY
- TEMPORARY CONSTRUCTION EASEMENT
- PERMANENT EASEMENT
- PROPOSED ASPHALT PAVEMENT
- PROPOSED CONCRETE
- PROPOSED BRICK PAVERS
- PROPOSED DETECTABLE WARNINGS

20 0 20 40
SCALE: 1" = 20' FEET

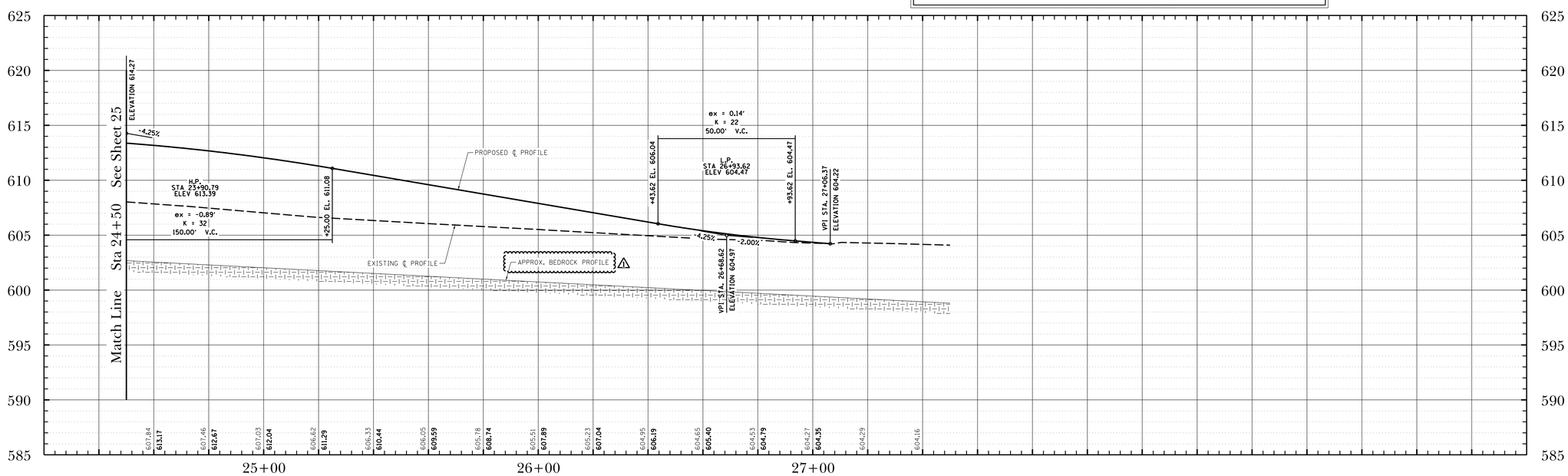

DATE	REVISIONS	ISSUE
3/1/19	ADDENDUM #1	1.
2/21/19	ISSUED FOR BIDDING	

PROJECT STAFF
PROJECT MANAGER: SCOTT TROTTER, P.E.
ENGINEER: TERRY THEYKAMP, P.E.
ENGINEER:
ENGINEER:
TECHNICIAN: MIKE DAVISON
TECHNICIAN:

TROTTER ASSOCIATES, INC.
ENGINEERS AND SURVEYORS
400-2D N. Main Roadt, Suite D
Oswego, Illinois 60543
Ph. 630-587-0170 • Fax 630-587-0175

The Reserve at Hudson Crossing - Roadway Improvements
Roadway Plan and Profile
Adams Street Sta 24+50 to Sta 27+50
Oswego, Kendall County, Illinois

Project No.: SH0002
File Name: 26_P&P_ADAMS.dgn
Issue Date: 3/1/2019
Scale: HORIZ: 1" = 20' VERT: 1" = 5'
Sheet Number
26

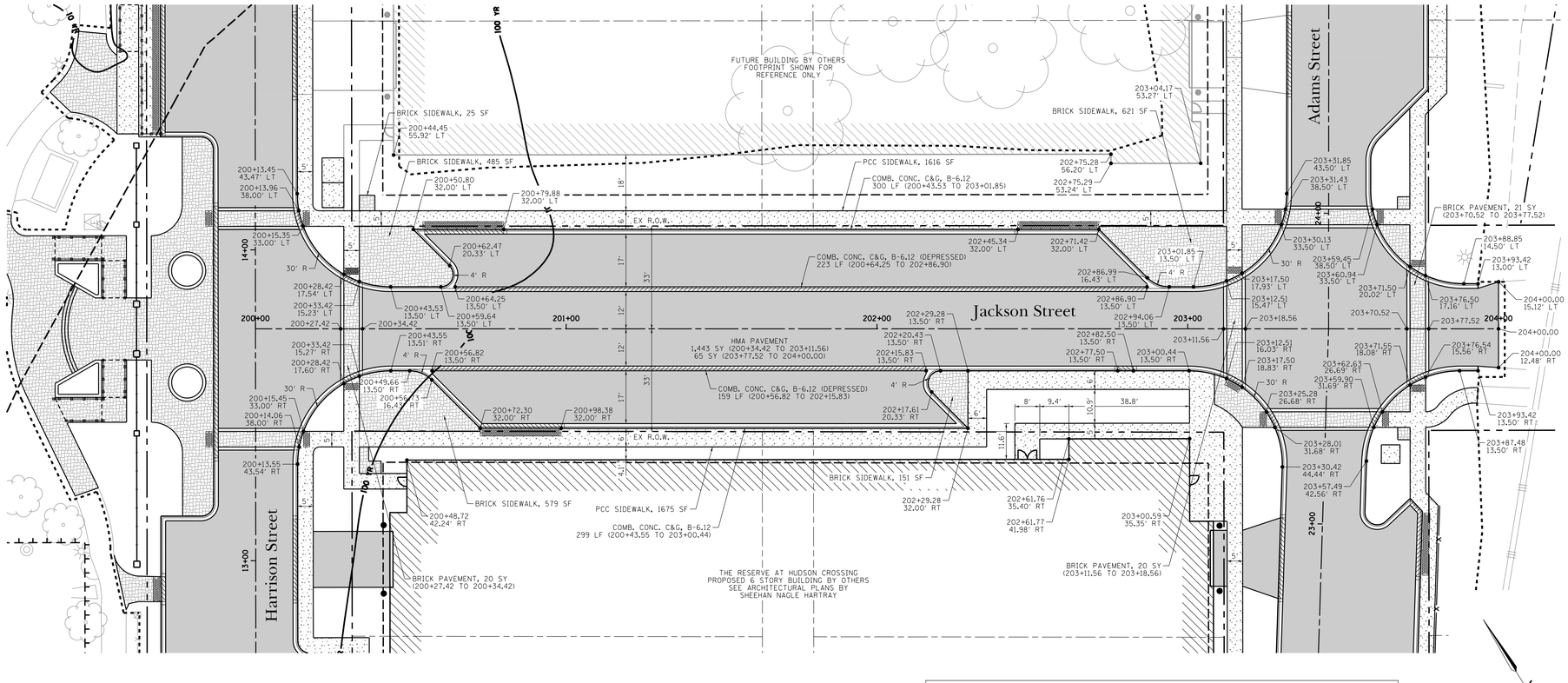

NOTES:

1. STATION / OFFSET AND CURB RETURN RADIUS SHOWN AT TOP (BACK) OF CURB UNLESS NOTED OTHERWISE.

Legend

- LIMITS OF CONSTRUCTION
- CURB & GUTTER
- DEPRESSED CURB & GUTTER
- EXISTING RIGHT OF WAY
- TEMPORARY CONSTRUCTION EASEMENT
- PERMANENT EASEMENT
- PROPOSED ASPHALT PAVEMENT
- PROPOSED CONCRETE
- PROPOSED BRICK PAVERS
- PROPOSED DETECTABLE WARNINGS

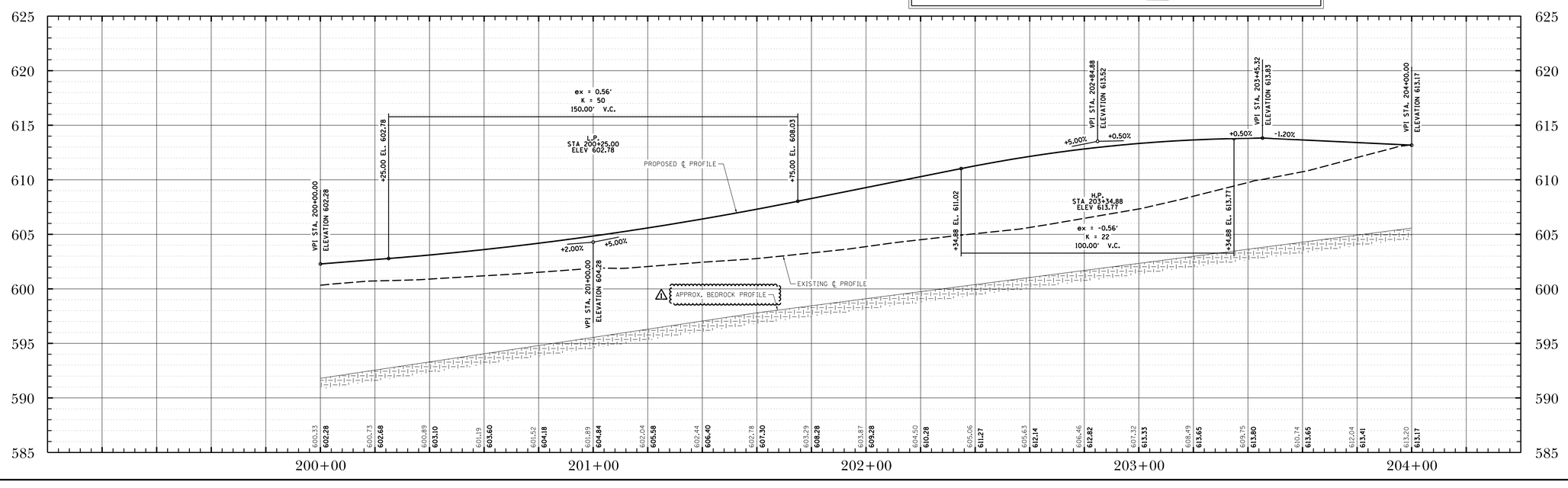

DATE	REVISIONS	ISSUE
3/1/19	ADDENDUM #1	1.
2/21/19	ISSUED FOR BIDDING	

PROJECT STAFF

PROJECT MANAGER:	SCOTT TROTTER, P.E.
ENGINEER:	TERRY HEFFKAMP, P.E.
ENGINEER:	
ENGINEER:	
TECHNICIAN:	MIKE HAYSON
TECHNICIAN:	

TROTTER ASSOCIATES, INC.
ENGINEERS AND SURVEYORS
409/201 Veterans Roadd, Suite D
Warrenville, Illinois 60555
Ph. 630-587-0170 • Fax: 630-587-0175

The Reserve at Hudson Crossing - Roadway Improvements
Roadway Plan and Profile
Jackson Street Sta 200+00 to Sta 203+45.32
Oswego, Kendall County, Illinois

Project No.:	SH0002
File Name:	27_P&P_JACK.dgn
Issue Date:	3/1/2019
Scale:	HORIZ: 1" = 20' VERT: 1" = 5'
Sheet Number	27

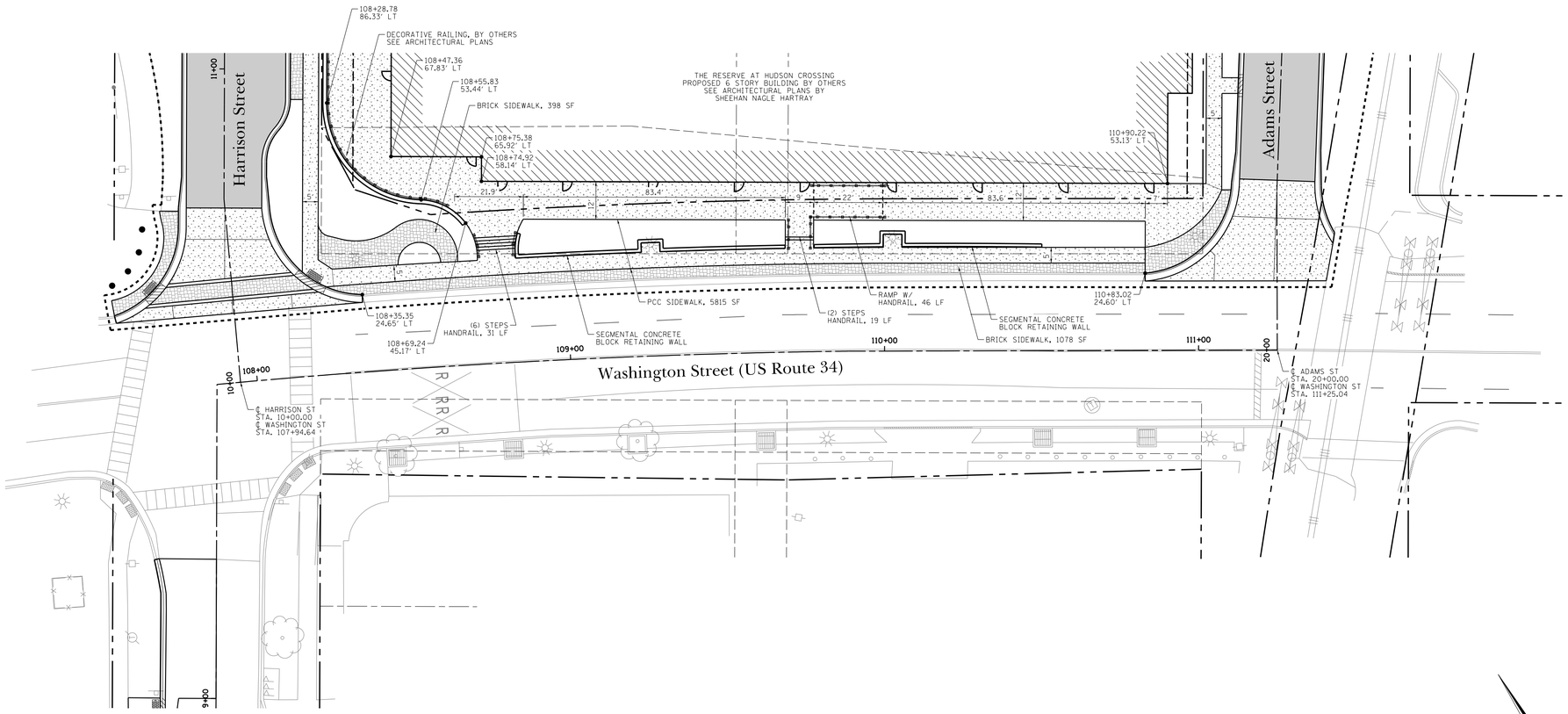

NOTES:

1. STATION / OFFSET AND CURB RETURN RADIUS SHOWN AT TOP (BACK) OF CURB UNLESS NOTED OTHERWISE.

Legend

- LIMITS OF CONSTRUCTION
- CURB & GUTTER
- DEPRESSED CURB & GUTTER
- EXISTING RIGHT OF WAY
- TEMPORARY CONSTRUCTION EASEMENT
- PERMANENT EASEMENT
- PROPOSED ASPHALT PAVEMENT
- PROPOSED CONCRETE
- PROPOSED BRICK PAVERS
- PROPOSED DETECTABLE WARNINGS

20 0 20 40
SCALE: 1" = 20' FEET

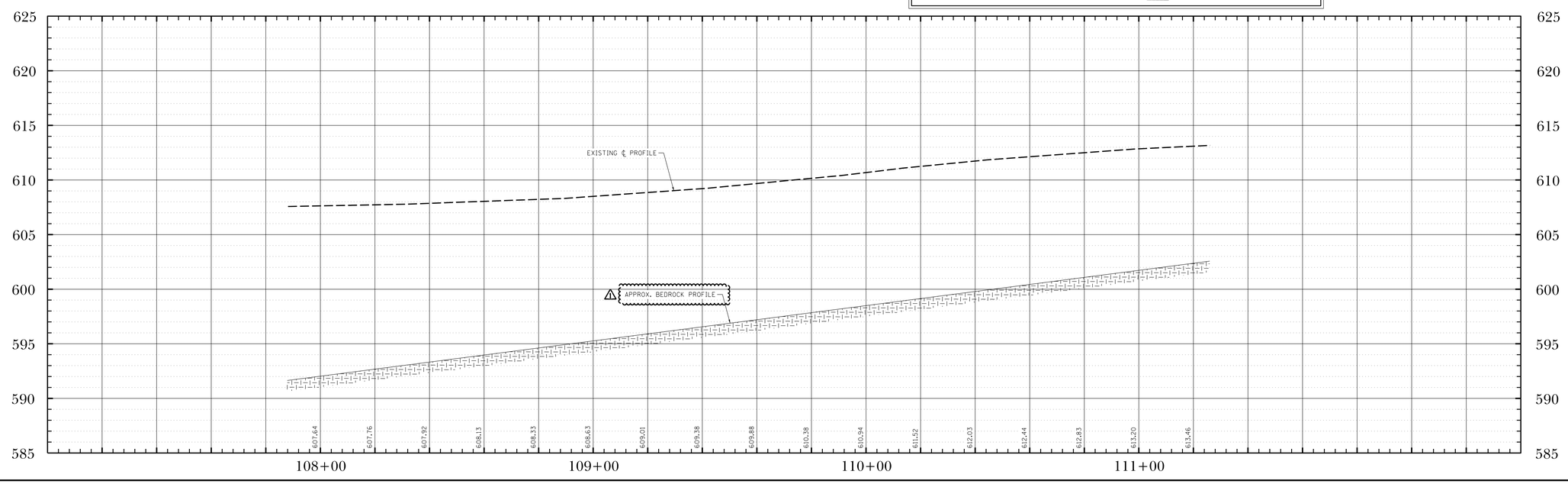

DATE	REVISIONS	ISSUE
3/1/19	ADDENDUM #1	1.
2/21/19	ISSUED FOR BIDDING	

PROJECT STAFF
PROJECT MANAGER: SCOTT TROTTER, P.E.
ENGINEER: TERRY HEFKAMP, P.E.
ENGINEER:
ENGINEER:
TECHNICIAN: MIKE HAYSON
TECHNICIAN:

TROTTER ASSOCIATES, INC.
ENGINEERS AND SURVEYORS
400 W. Veterans Parkway, Suite D
Yorkville, Illinois 60560
Ph. 630-587-0170 • Fax 630-587-0175

The Reserve at Hudson Crossing - Roadway Improvements

Roadway Plan and Profile
Washington Street Sta 107+94.64 to Sta 111+25.04
Oswego, Kendall County, Illinois

Project No.: SH0002
File Name: 28_P&P_WASH.dgn
Issue Date: 3/1/2019
Scale: HORIZ: 1" = 20' VERT: 1" = 5'
Sheet Number
28

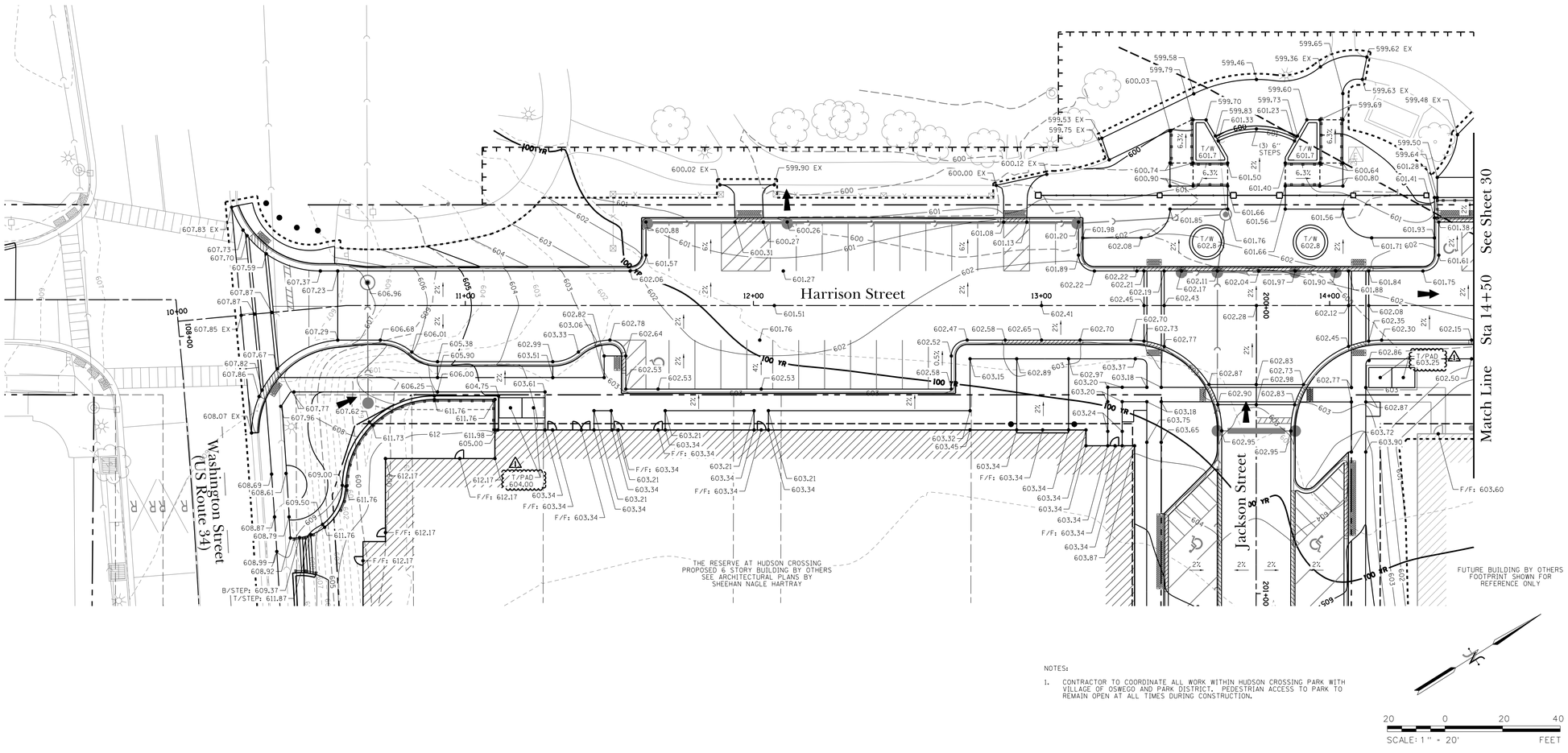

NOTES:

1. CONTRACTOR TO COORDINATE ALL WORK WITHIN HUDSON CROSSING PARK WITH VILLAGE OF OSWEGO AND PARK DISTRICT. PEDESTRIAN ACCESS TO PARK TO REMAIN OPEN AT ALL TIMES DURING CONSTRUCTION.

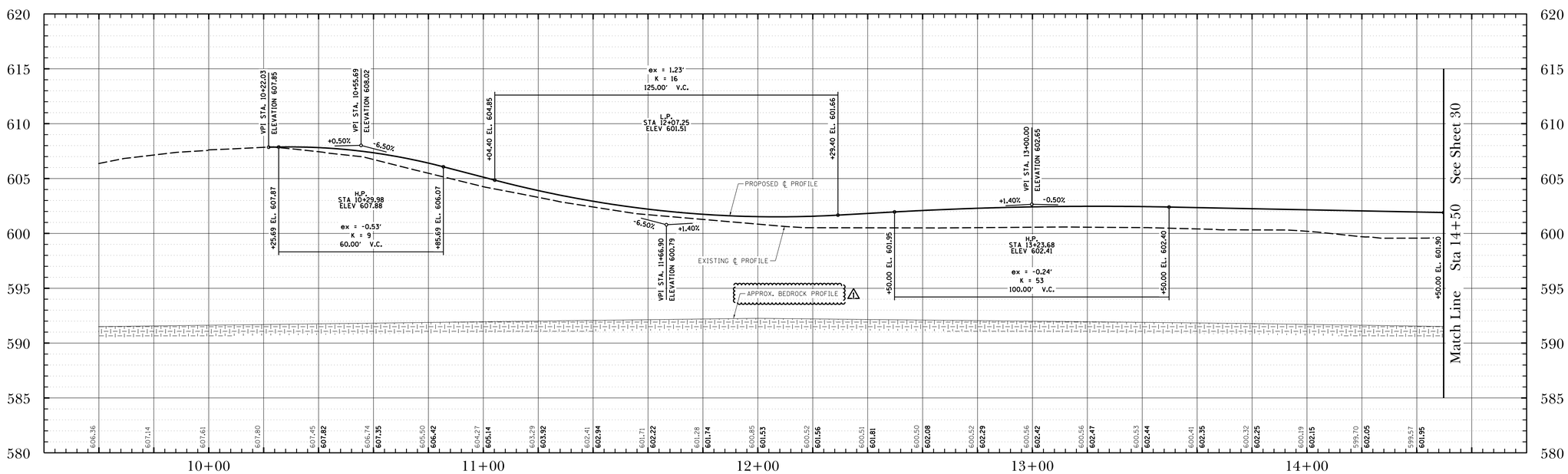

DATE	REVISIONS	ISSUE
3/1/19	ADDENDUM #1	1.
2/21/19	ISSUED FOR BIDDING	

PROJECT STAFF

PROJECT MANAGER:	SCOTT TROTTER, P.E.
ENGINEER:	TERRY HITEMAN, P.E.
ENGINEER:	
ENGINEER:	
TECHNICIAN:	MIKE DAVISON
TECHNICIAN:	

TROTTER ASSOCIATES, INC.
ENGINEERS AND SURVEYORS
4009 W. Veterans Road, Suite D
Bloomington, Illinois 61704
Ph. 630-587-0170 • Fax 630-587-0175

The Reserve at Hudson Crossing - Roadway Improvements
Grading Plan and Profile
Harrison Street Sta 10+00 to Sta 14+50
Oswego, Kendall County, Illinois

Project No.:	SH0002
File Name:	29_GRADING_P&P_HAR.dgn
Issue Date:	3/1/2019
Scale:	HORIZ: 1" = 20' VERT: 1" = 5'
Sheet Number	29

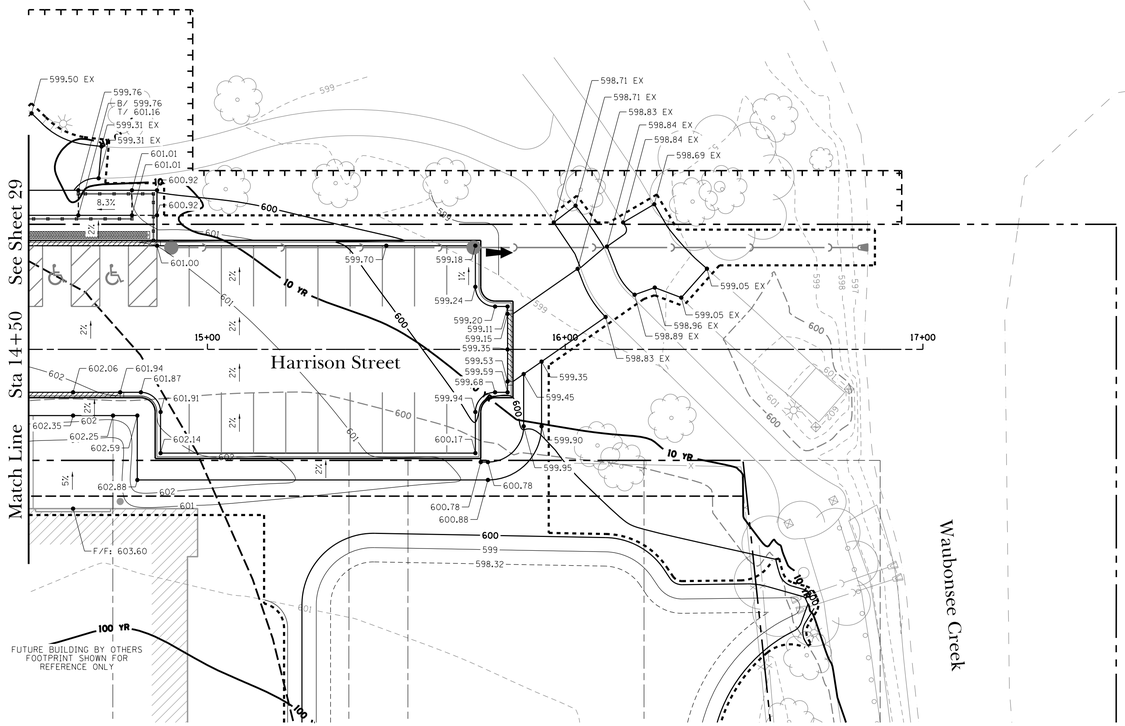

NOTES:

1. CONTRACTOR TO COORDINATE ALL WORK WITHIN HUDSON CROSSING PARK WITH VILLAGE OF OSWEGO AND PARK DISTRICT. PEDESTRIAN ACCESS TO PARK TO REMAIN OPEN AT ALL TIMES DURING CONSTRUCTION.

20 0 20 40
SCALE: 1" = 20' FEET

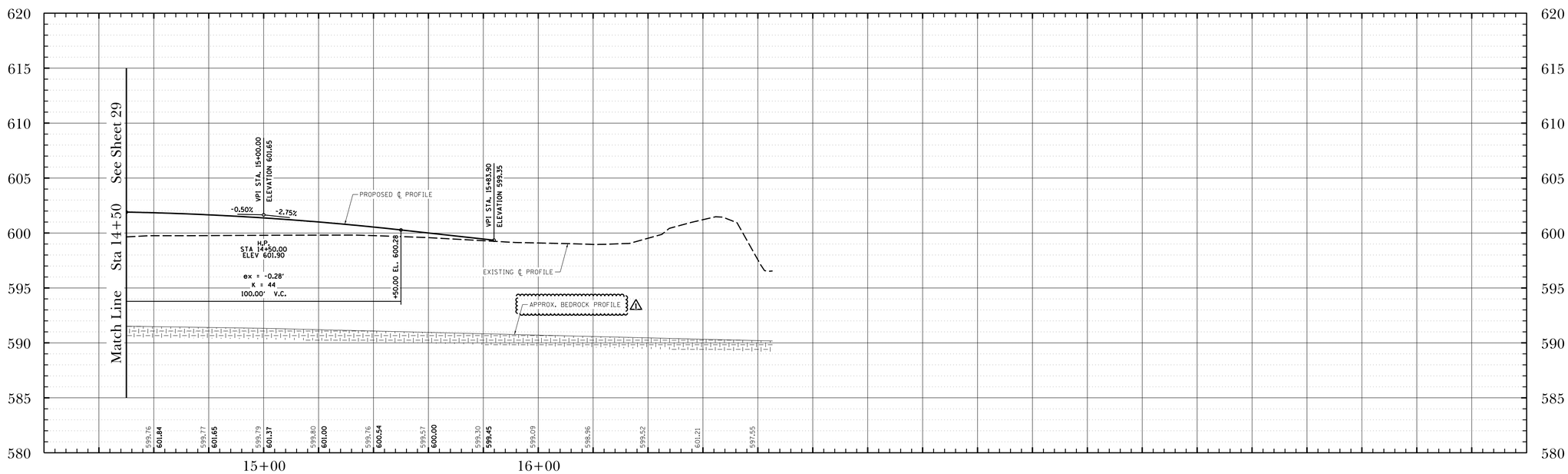

DATE	REVISIONS	ISSUE
3/1/19	ADDENDUM #1	1.
2/21/19	ISSUED FOR BIDDING	

PROJECT STAFF
PROJECT MANAGER: SCOTT TROTTER, P.E.
ENGINEER: TERRY THEYKAMP, P.E.
ENGINEER:
ENGINEER:
TECHNICIAN: MIKE DAVISON
TECHNICIAN:

TROTTER ASSOCIATES, INC.
ENGINEERS AND SURVEYORS
400 N. Main Street, Suite D
Naperville, Illinois 60563
Ph. 630-587-0170 • Fax 630-587-0175

The Reserve at Hudson Crossing - Roadway Improvements
Grading Plan and Profile
Harrison Street Sta 14+50 to Sta 17+00
Oswego, Kendall County, Illinois

Project No.: SH0002
File Name: 30_GRADING_P&P_HAR.dgn
Issue Date: 3/1/2019
Scale: HORIZ: 1" = 20' VERT: 1" = 5'
Sheet Number
30

DATE	REVISIONS	ISSUE
3/1/19	ADDENDUM #1	1.
2/21/19	ISSUED FOR BIDDING	

PROJECT STAFF
PROJECT MANAGER: SCOTT TROTTER, P.E.
ENGINEER: TERRY THEYKAMP, P.E.
ENGINEER:
ENGINEER:
TECHNICIAN: MIKE DAVISON
TECHNICIAN:

TROTTER ASSOCIATES, INC.
ENGINEERS AND SURVEYORS
409/201 W. Jackson Boulevard, Suite D
Aurora, Illinois 60506
Ph. 630-587-0170 • Fax: 630-587-0175

The Reserve at Hudson Crossing - Roadway Improvements
Grading Plan and Profile
Adams Street Sta 20+00 to Sta 24+50
Oswego, Kendall County, Illinois

Project No.: SH0002
File Name: 31_GRADING_P&P_ADAMS.dgn
Issue Date: 3/1/2019
Scale: HORIZ: 1" = 20' VERT: 1" = 5'
Sheet Number
31

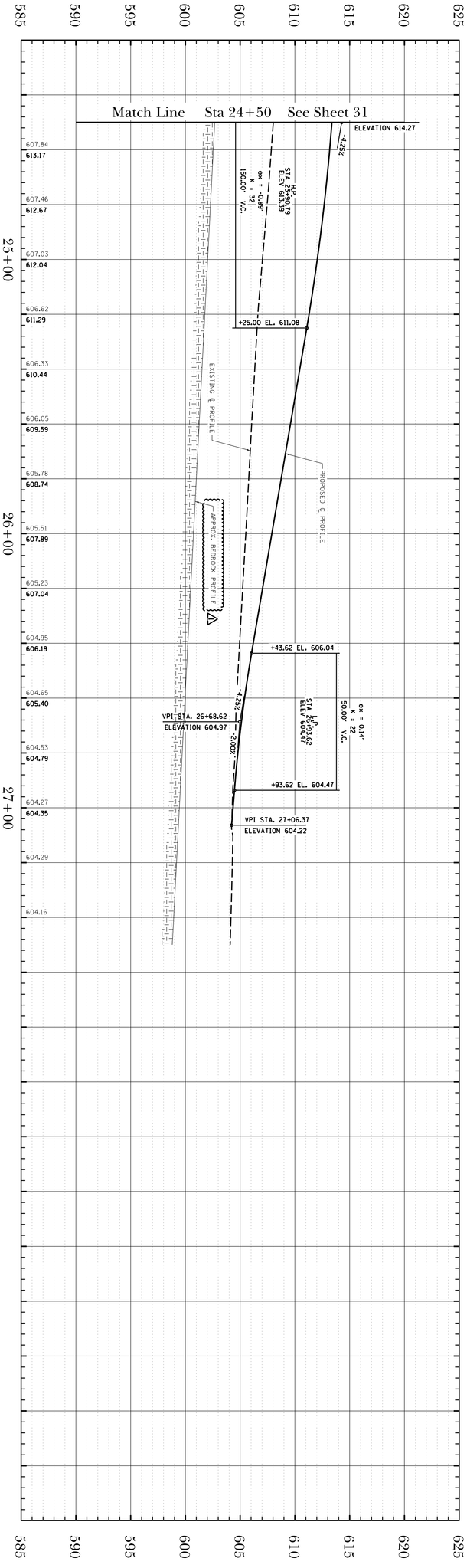

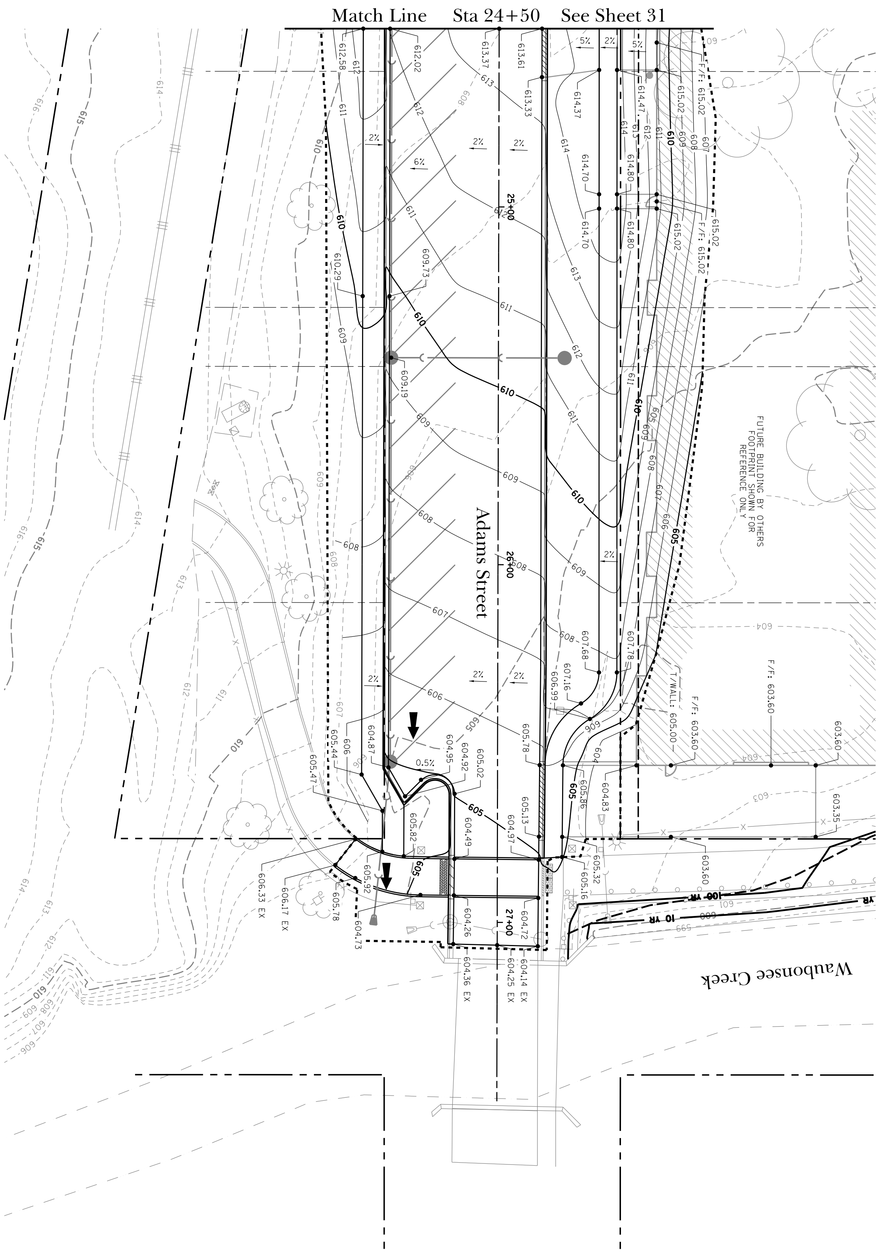

The Reserve at Hudson Crossing - Roadway Improvements

Grading Plan and Profile
Adams Street Sta 24+50 to Sta 27+50

Oswego, Kendall County, Illinois

TROTTER and ASSOCIATES, INC.
ENGINEERS AND SURVEYORS
40W201 Wasco Road, Suite D
St. Charles, IL 60175
Ph.: 630-587-0470 • Fax: 630-587-0475

PROJECT STAFF	
PROJECT MANAGER:	SCOTT TROTTER, P.E.
ENGINEER:	TERRY HEITKAMP, P.E.
ENGINEER:	
ENGINEER:	
TECHNICIAN:	MIKE DAVISON
TECHNICIAN:	

ISSUE	REVISIONS	DATE
1.	ADDENDUM #1	3/1/19
	ISSUED FOR BIDDING	2/21/19

Project No.: SH0002
File Name: 32_GRADING_P&P_ADAMS.dgn
Issue Date: 3/1/2019
Scale: HORIZ 1" = 20' VERT 1" = 5'
Sheet Number 32

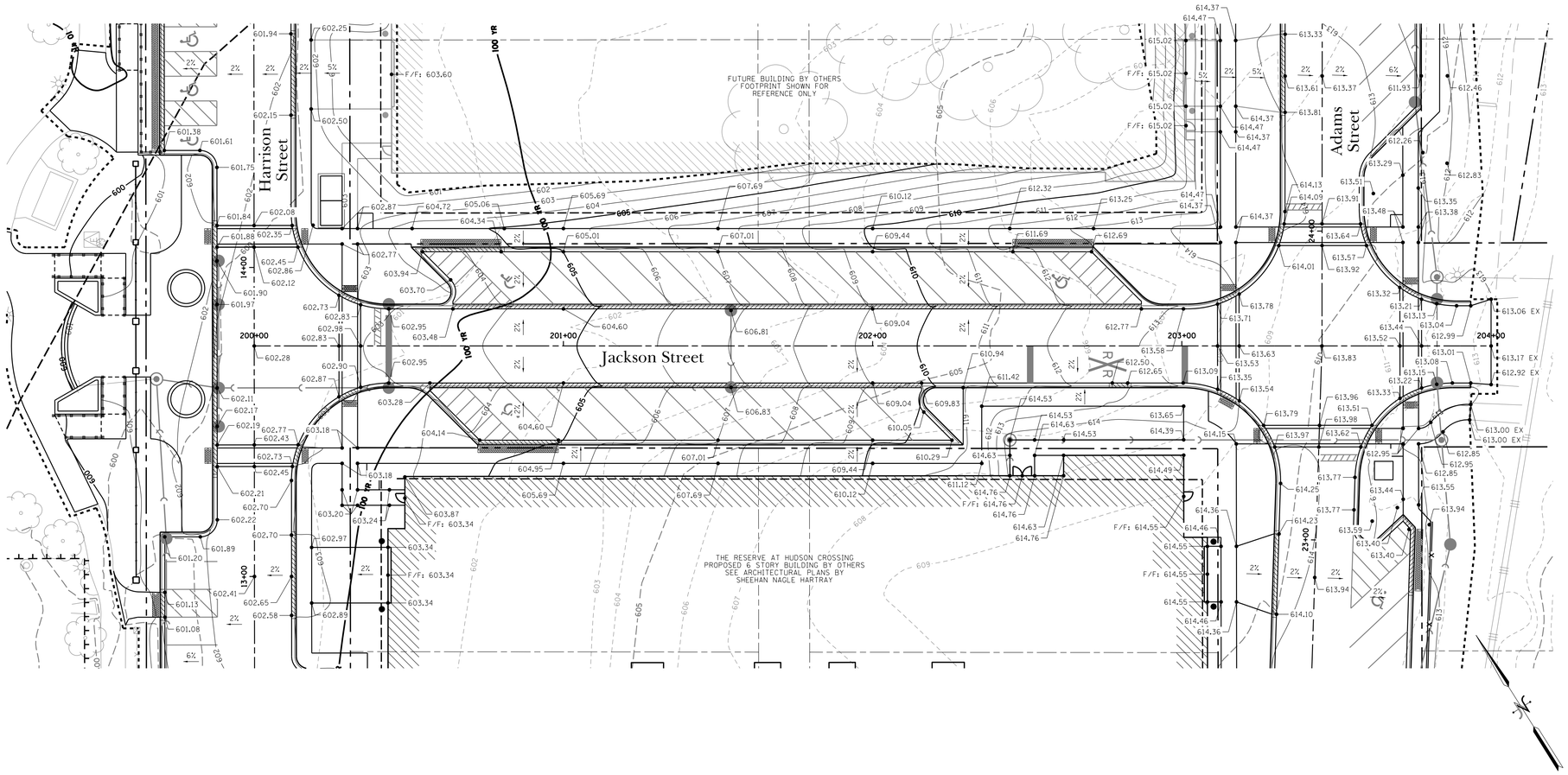

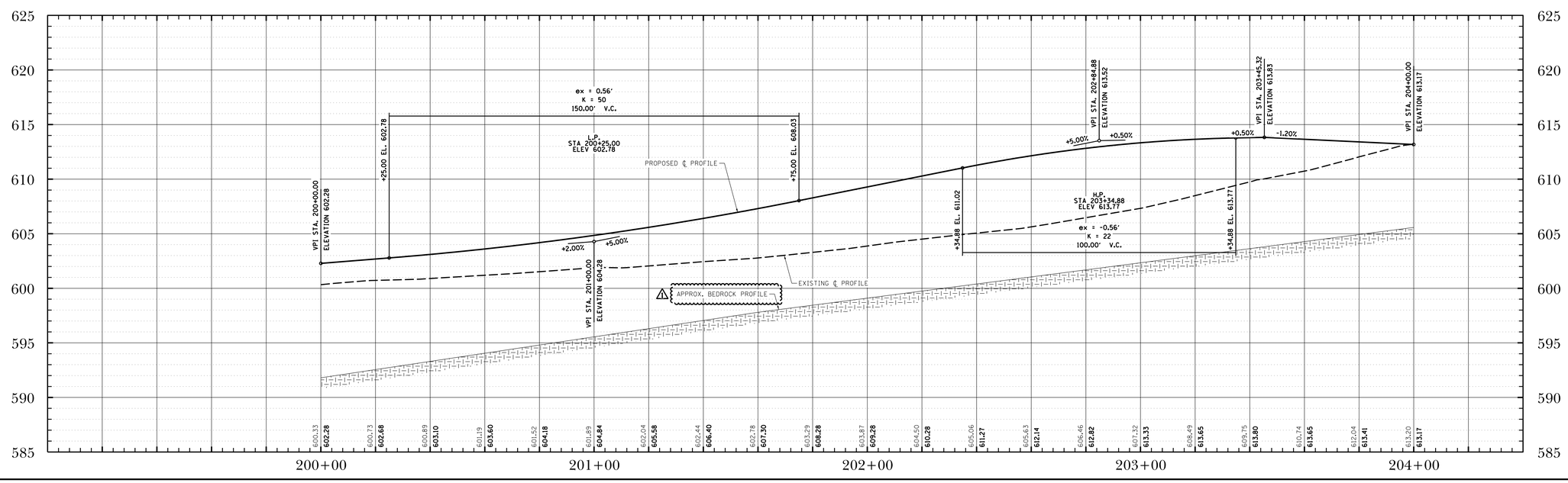

DATE	REVISIONS	ISSUE
3/1/19	ADDENDUM #1	1.
2/21/19	ISSUED FOR BIDDING	

PROJECT STAFF

PROJECT MANAGER:	SCOTT TROTTER, P.E.
ENGINEER:	TERRY THEYKAMP, P.E.
ENGINEER:	
ENGINEER:	
TECHNICIAN:	MIKE DAVISON
TECHNICIAN:	

TROTTER ASSOCIATES, INC.
ENGINEERS AND SURVEYORS
4109/201 Veterans Boulevard, Suite D
Romeoville, Illinois 60446
Ph. 630-587-0170 • Fax: 630-587-0175

The Reserve at Hudson Crossing - Roadway Improvements
Grading Plan and Profile
Jackson Street Sta 200+00 to Sta 203+45.32
Oswego, Kendall County, Illinois

Project No.:	SH0002
File Name:	33_GRADING_P&P_JACK.dgn
Issue Date:	3/1/2019
Scale:	HORIZ: 1" = 20' VERT: 1" = 5'
Sheet Number	33

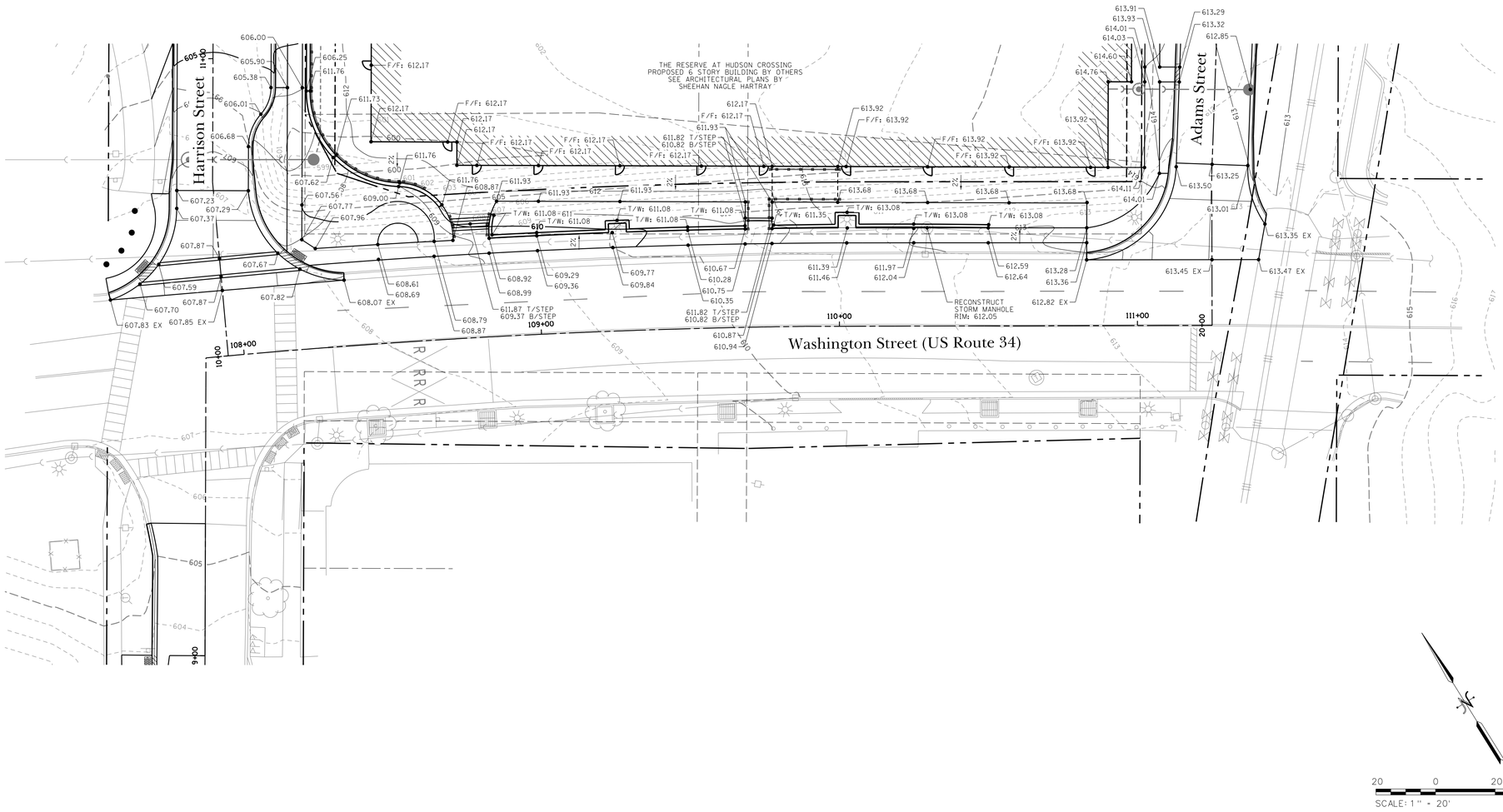

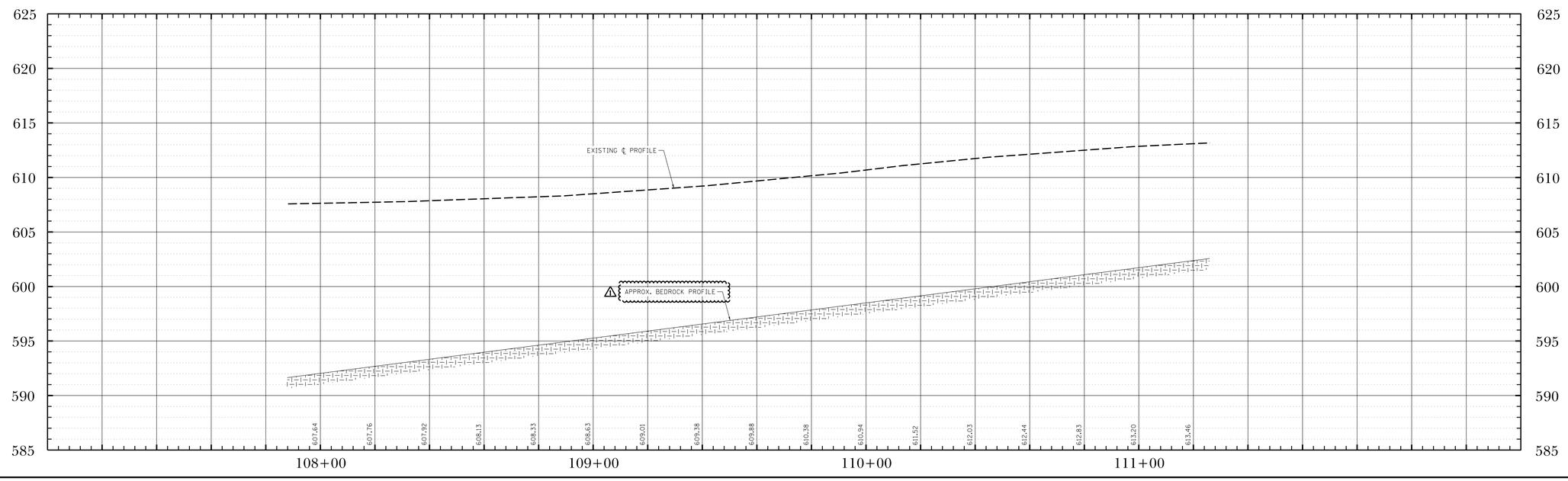

DATE	REVISIONS	ISSUE
3/1/19		
2/21/19	ADDENDUM #1 ISSUED FOR BIDDING	1.

PROJECT STAFF

PROJECT MANAGER:	SCOTT TROTTER, P.E.
ENGINEER:	TERRY HEFFKAMP, P.E.
ENGINEER:	
ENGINEER:	
TECHNICIAN:	MIKE DAVISON
TECHNICIAN:	

TROTTER ASSOCIATES, INC.
ENGINEERS AND SURVEYORS
400 W. Veterans Parkway, Suite D
Yorkville, Illinois 60560
Ph. 630-587-0170 • Fax: 630-587-0175

The Reserve at Hudson Crossing - Roadway Improvements
Grading Plan and Profile
Washington Street Sta 107+94.64 to Sta 111+25.04
Oswego, Kendall County, Illinois

Project No.:	SH0002
File Name:	34_GRADING_P&P_WASH.dgn
Issue Date:	3/1/2019
Scale:	HORIZ: 1" = 20' VERT: 1" = 5'
Sheet Number	34

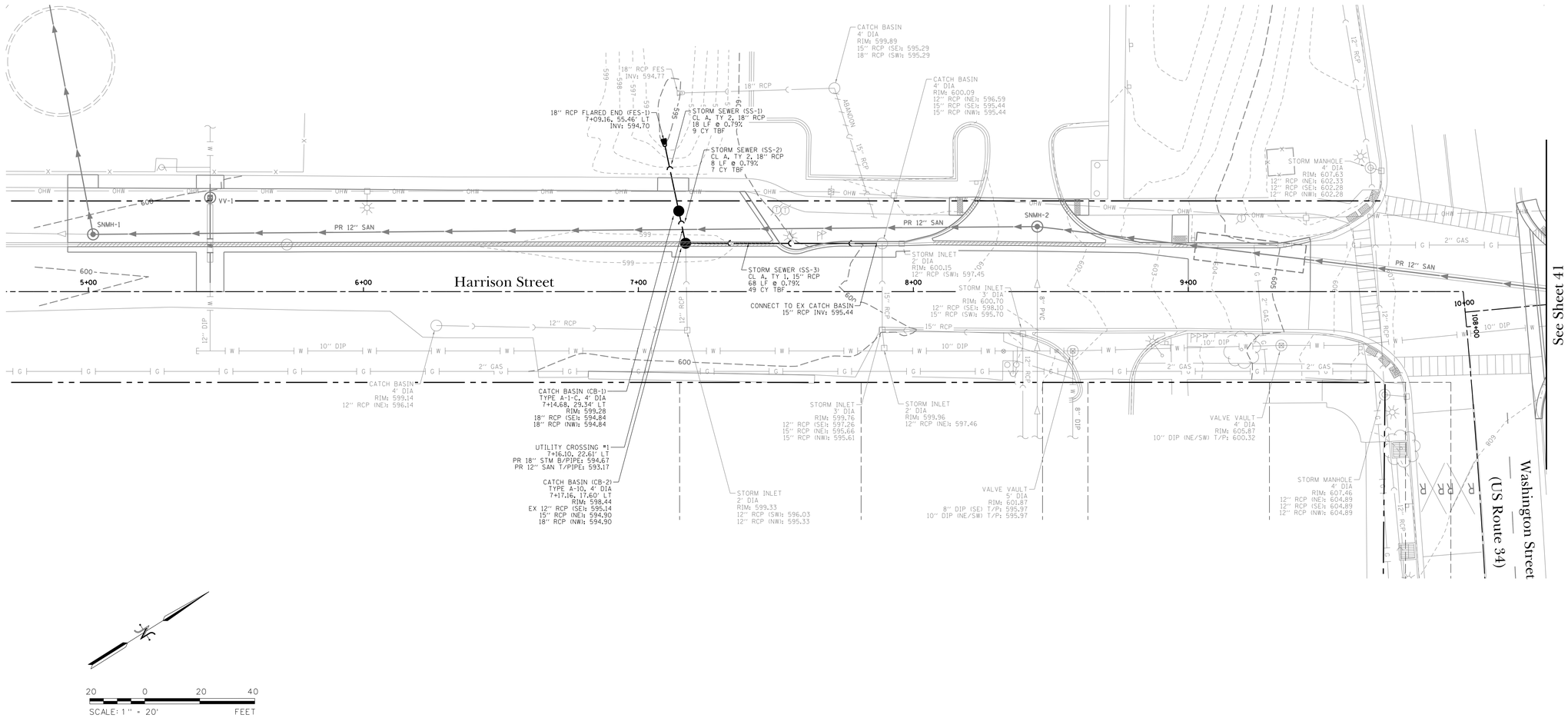

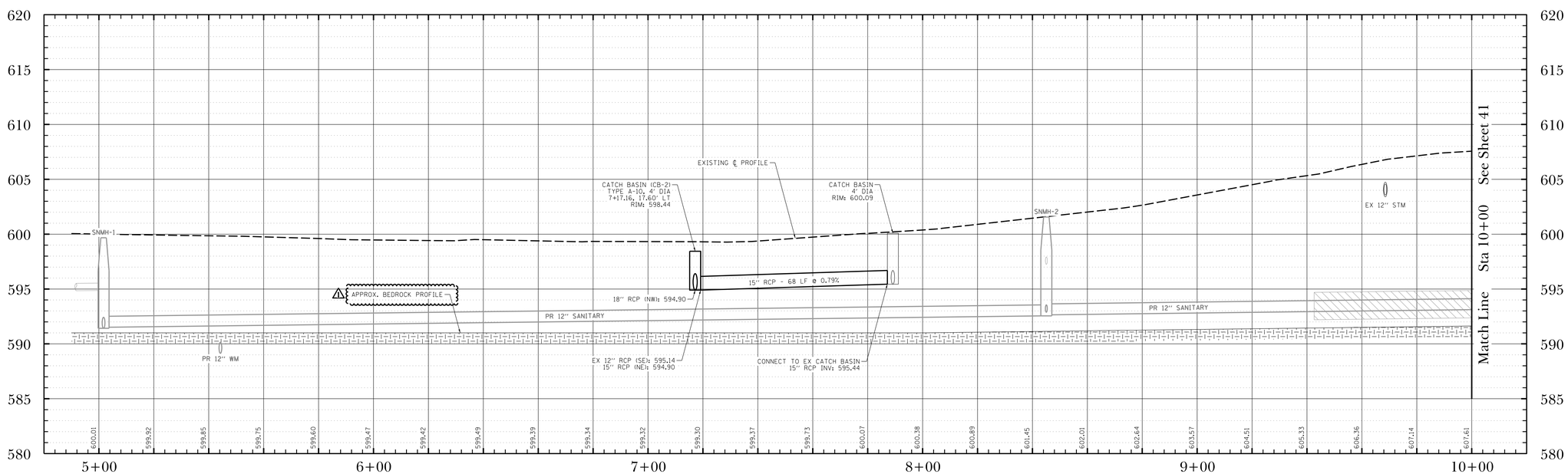

DATE	REVISIONS	ISSUE
3/1/19	ADDENDUM #1	1.
2/21/19	ISSUED FOR BIDDING	

PROJECT STAFF
PROJECT MANAGER: SCOTT TROTTER, P.E.
ENGINEER: TERRY THEYKAMP, P.E.
ENGINEER:
ENGINEER:
TECHNICIAN: MIKE DAVISON
TECHNICIAN:

TROTTER ASSOCIATES, INC.
ENGINEERS AND SURVEYORS
40W270 Wilson Roadd, Suite D
Elburn, Illinois 60119
Ph. 630-587-0170 • Fax: 630-587-0175

The Reserve at Hudson Crossing - Roadway Improvements
Drainage Plan and Profile
Harrison Street Sta 5+00 to Sta 10+00
Oswego, Kendall County, Illinois

Project No.: SH0002
File Name: 40_DRAIN_P&P_HAR.dgn
Issue Date: 3/1/2019
Scale: HORIZ: 1" = 20' VERT: 1" = 5'
Sheet Number
40

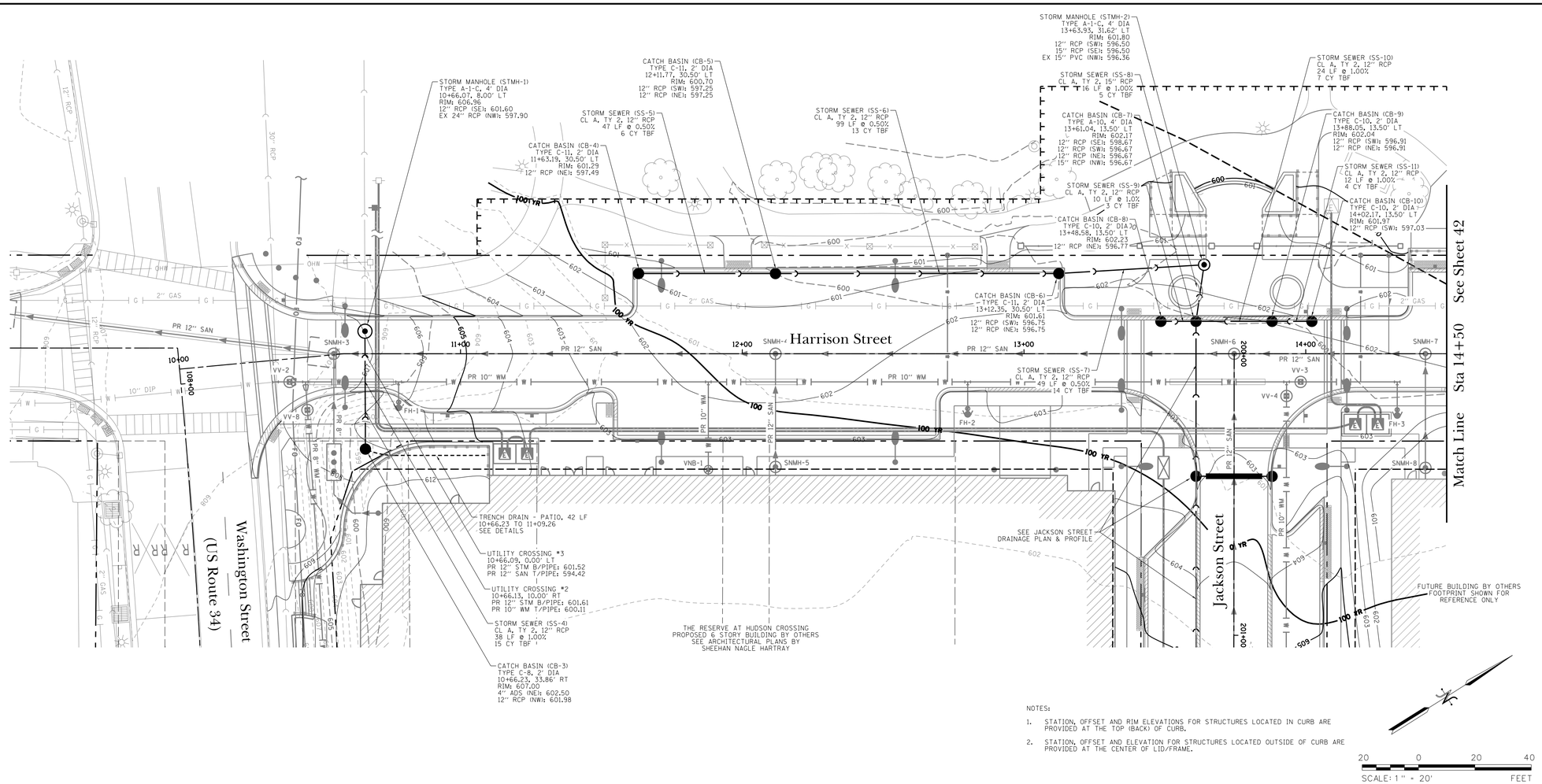

NOTES:

1. STATION, OFFSET AND RIM ELEVATIONS FOR STRUCTURES LOCATED IN CURB ARE PROVIDED AT THE TOP (BACK) OF CURB.
2. STATION, OFFSET AND ELEVATION FOR STRUCTURES LOCATED OUTSIDE OF CURB ARE PROVIDED AT THE CENTER OF LID/FRAME.

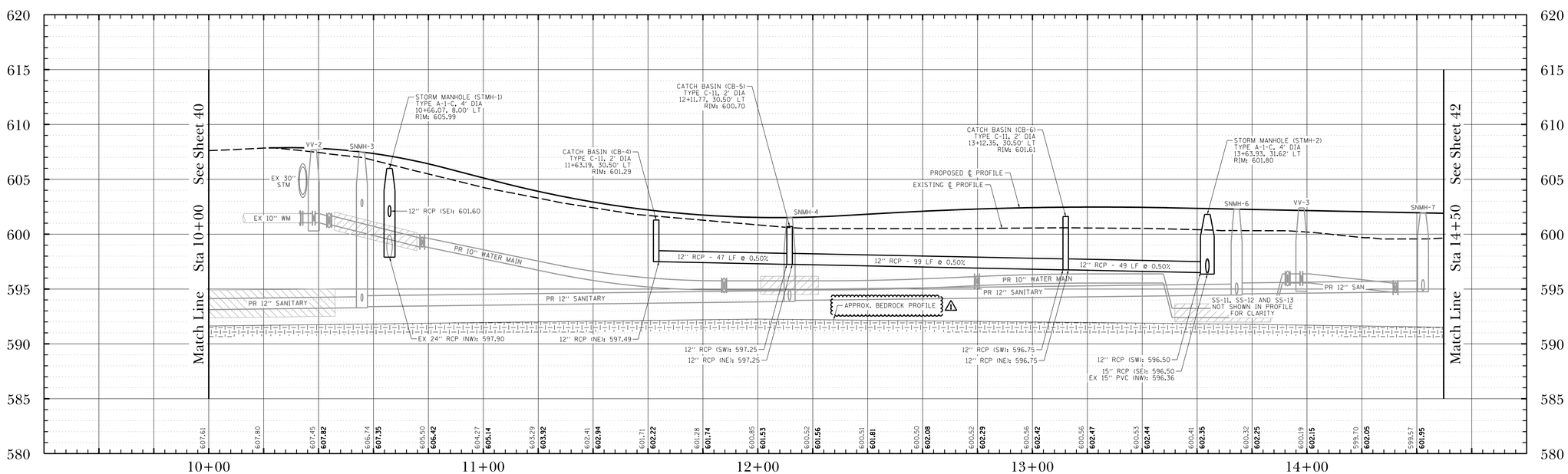

DATE	REVISIONS	ISSUE
3/1/19	ADDENDUM #1	1.
2/21/19	ISSUED FOR BIDDING	

PROJECT STAFF

PROJECT MANAGER:	SCOTT TROTTER, P.E.
ENGINEER:	TERRY HEFFNAN, P.E.
ENGINEER:	
ENGINEER:	
TECHNICIAN:	MIKE DAVISON
TECHNICIAN:	

TROTTER ASSOCIATES, INC.
ENGINEERS AND SURVEYORS
400 W. Veterans Road, Suite D
Plainfield, Illinois 60544
Ph. 630-587-0170 • Fax: 630-587-0175

The Reserve at Hudson Crossing - Roadway Improvements
Drainage Plan and Profile
Harrison Street Sta 10+00 to Sta 14+50
Oswego, Kendall County, Illinois

Project No.: SH0002

File Name: 41_DRAIN_P&P_HAR.dgn

Issue Date: 3/1/2019

Scale: HORIZ: 1" = 20' VERT: 1" = 5'

Sheet Number

41

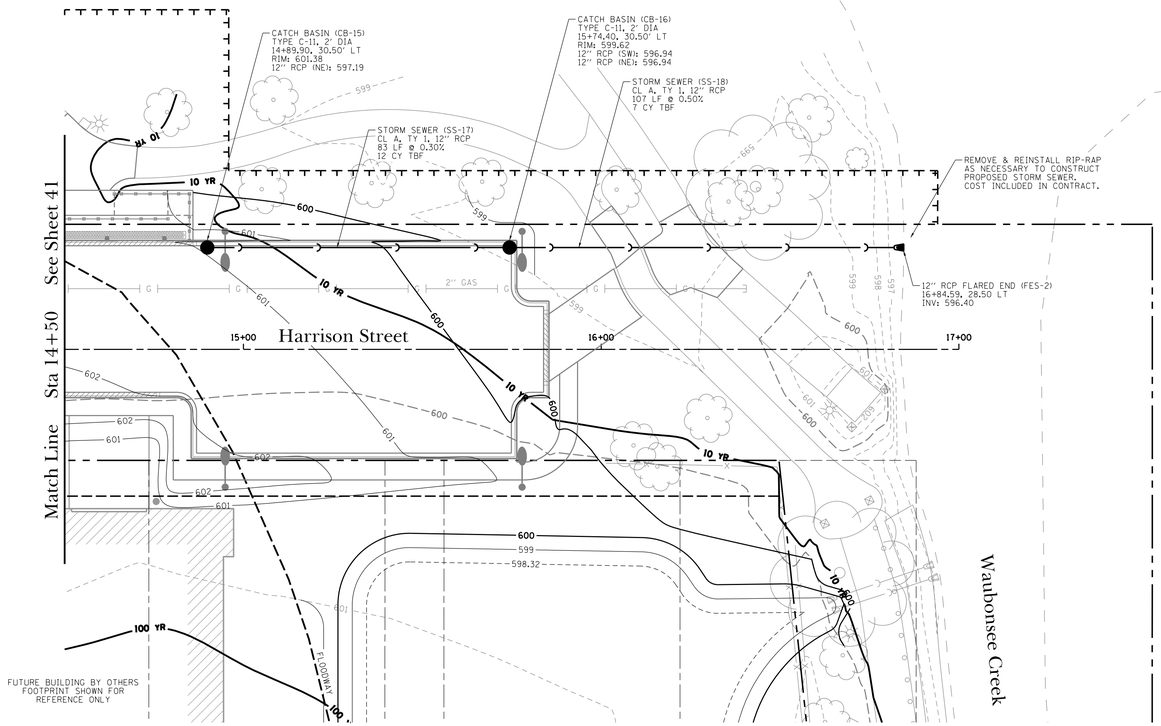

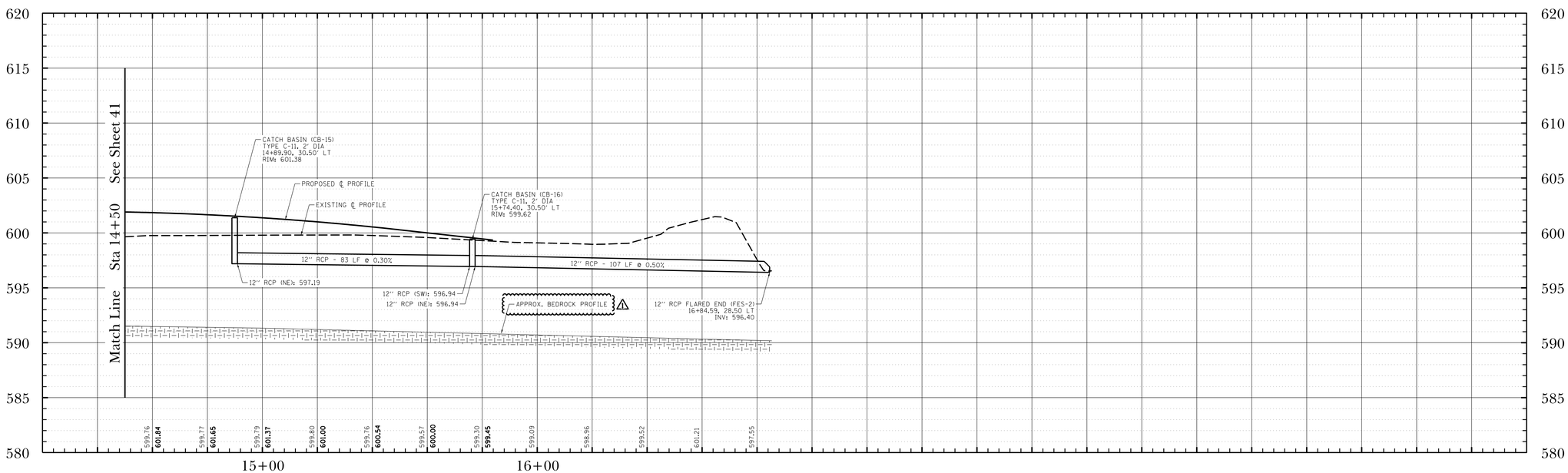

20 0 20 40
SCALE: 1" = 20'
FEET

DATE	REVISIONS	ISSUE
3/1/19	ADDENDUM #1	1.
2/21/19	ISSUED FOR BIDDING	

PROJECT STAFF

PROJECT MANAGER:	SCOTT TROTTER, P.E.
ENGINEER:	TERRY THEYKAMP, P.E.
ENGINEER:	
ENGINEER:	
TECHNICIAN:	MIKE DAVISON
TECHNICIAN:	

TROTTER
ASSOCIATES, INC.
ENGINEERS AND SURVEYORS
400 N. Orchard Road, Suite D
Naperville, Illinois 60563
Ph. 630-587-0170 • Fax 630-587-0175

The Reserve at Hudson Crossing - Roadway Improvements
Drainage Plan and Profile
Harrison Street Sta 14+50 to Sta 17+00
Oswego, Kendall County, Illinois

Project No.: SH0002
File Name: 42_DRAIN_P&P_HAR.dgn
Issue Date: 3/1/2019
Scale: HORIZ: 1" = 20' VERT: 1" = 5'
Sheet Number
42

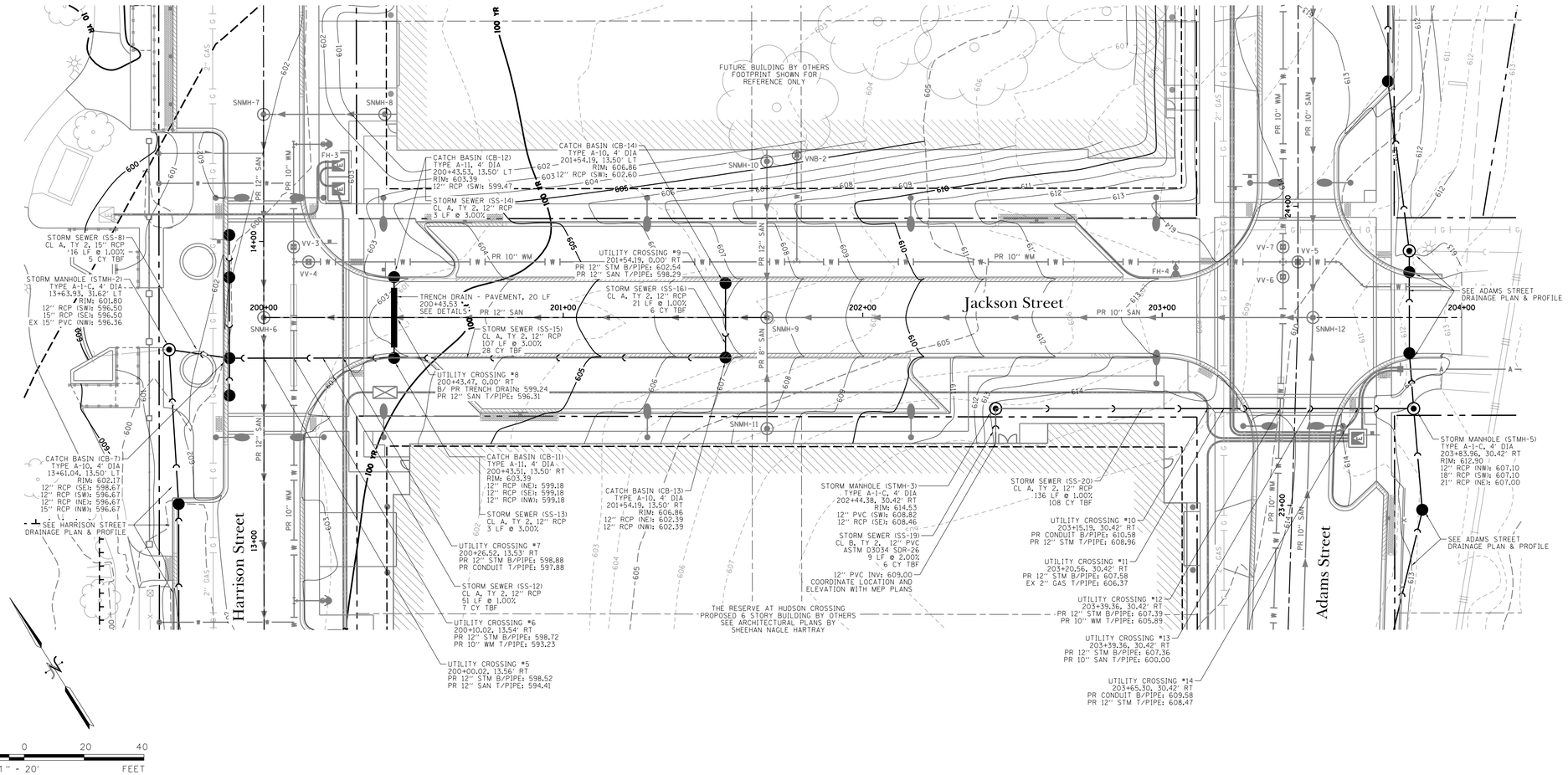

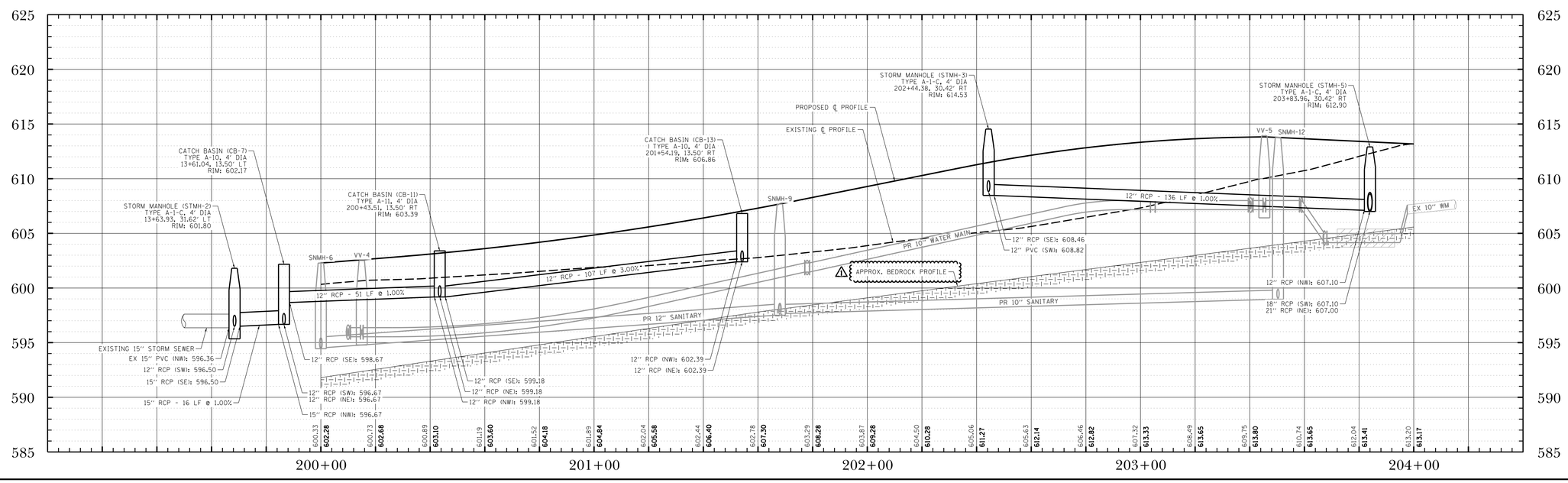

DATE	REVISIONS	ISSUE
3/1/19	ADDENDUM #1	1.
2/21/19	ISSUED FOR BIDDING	

PROJECT STAFF
PROJECT MANAGER: SCOTT TROTTER, P.E.
ENGINEER: TERRY HEFFKAMP, P.E.
ENGINEER:
ENGINEER:
TECHNICIAN: MIKE HAYSON
TECHNICIAN:

TROTTER ASSOCIATES, INC.
ENGINEERS AND SURVEYORS
400 W. Nelson Road, Suite D
Oswego, Illinois 60543
Ph. 630-587-0170 • Fax: 630-587-0175

The Reserve at Hudson Crossing - Roadway Improvements
Drainage Plan and Profile
Jackson Street Sta 200+00 to Sta 203+45.32
Oswego, Kendall County, Illinois

Project No.:	SH0002
File Name:	43_DRAIN_P&P_JACK.dgn
Issue Date:	3/1/2019
Scale:	HORIZ: 1" = 20' VERT: 1" = 5'
Sheet Number	43

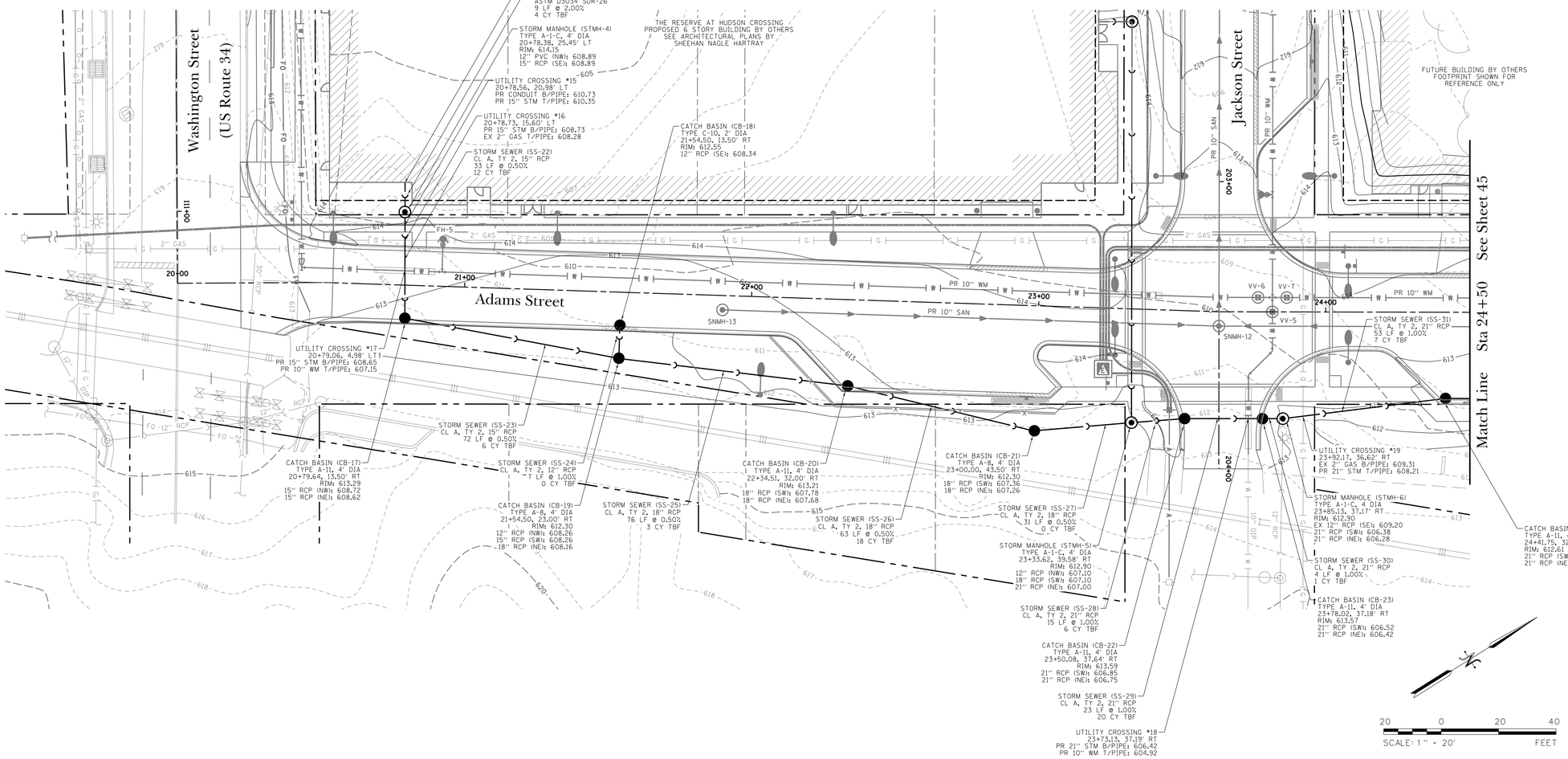

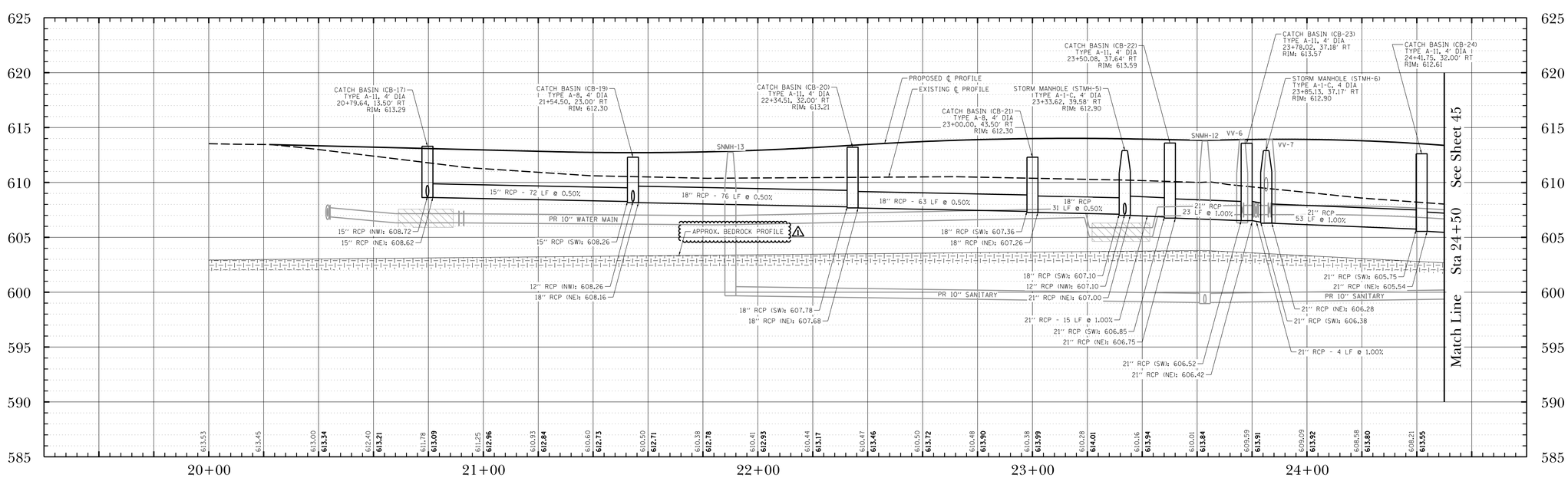

PROJECT STAFF	
PROJECT MANAGER:	SCOTT TROTTER, P.E.
ENGINEER:	TERRY HEFFERNAN, P.E.
ENGINEER:	
ENGINEER:	
TECHNICIAN:	MIKE DAVISON
TECHNICIAN:	

ISSUE	REVISIONS	DATE
1.	ADDENDUM #1	3/1/19
	ISSUED FOR BIDDING	2/21/19

TROTTER ASSOCIATES, INC.
ENGINEERS AND SURVEYORS
4109 W. Verso Road, Suite D
Yorkville, Illinois 60560
Ph: 630-587-0170 • Fax: 630-587-0175

The Reserve at Hudson Crossing - Roadway Improvements
Drainage Plan and Profile
Adams Street Sta 20+00 to Sta 24+50
Oswego, Kendall County, Illinois

Project No.:	SH0002
File Name:	44_DRAIN_P&P_ADAMS.dgn
Issue Date:	3/1/2019
Scale:	HORIZ: 1" = 20' VERT: 1" = 5'
Sheet Number	44

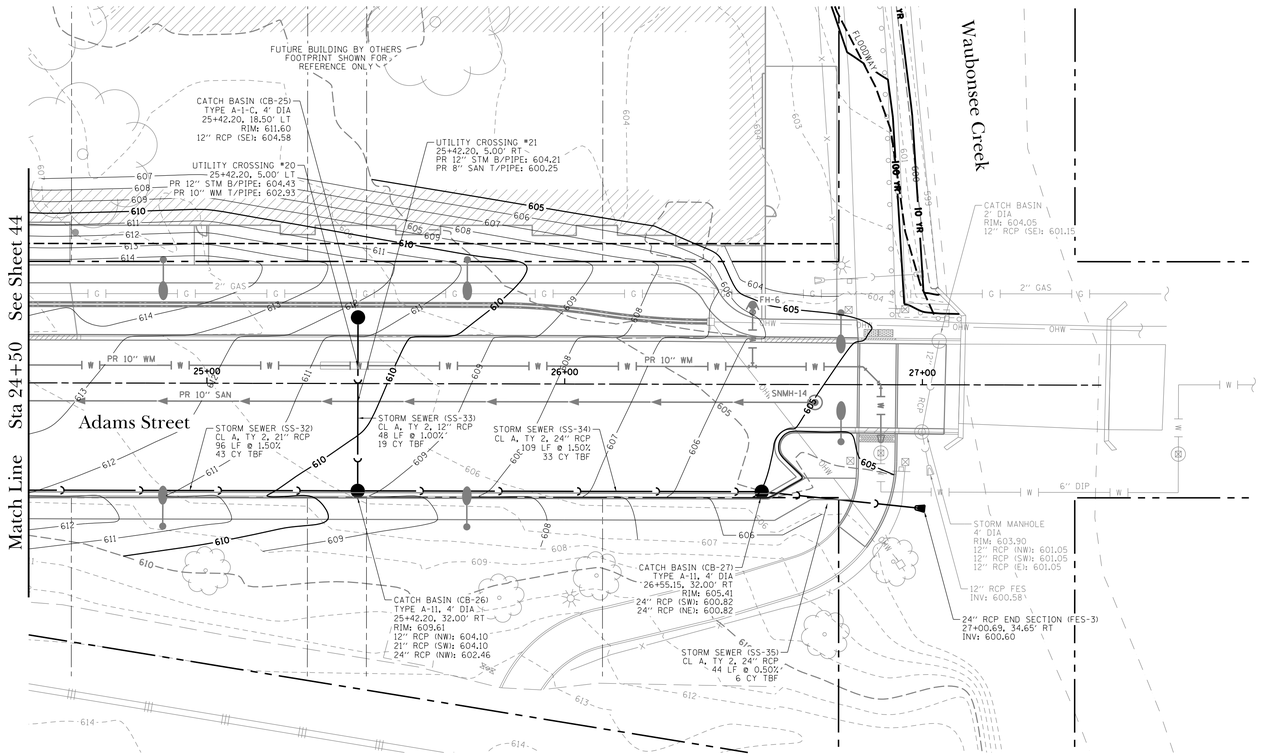

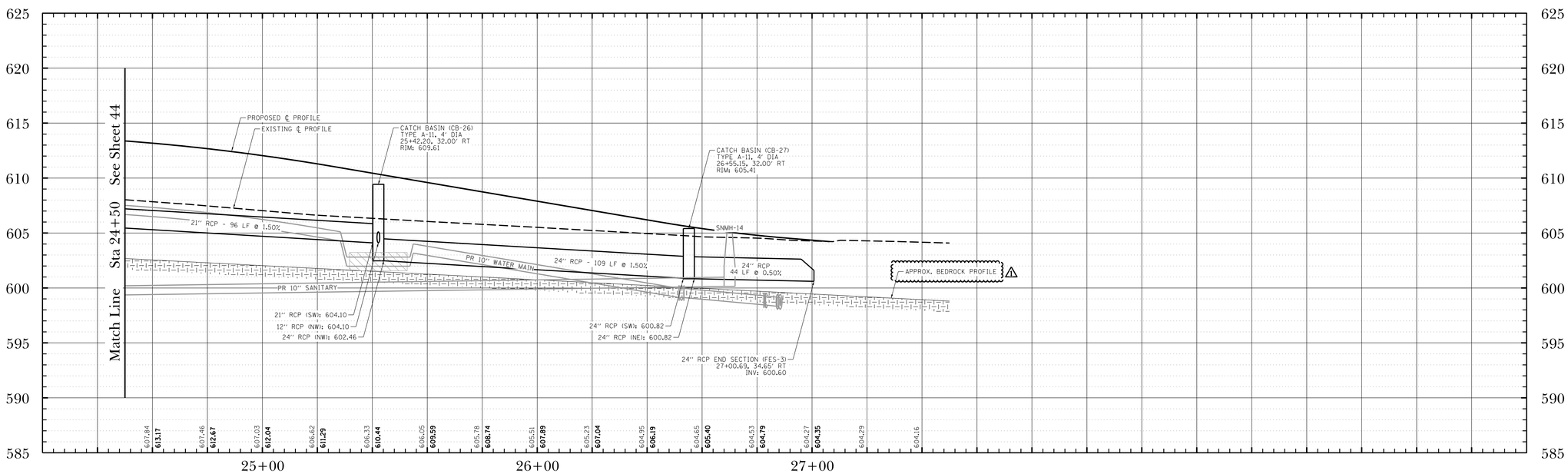

20 0 20 40
SCALE: 1" = 20'
FEET

DATE	REVISIONS	ISSUE
3/1/19	ADDENDUM #1	1.
2/21/19	ISSUED FOR BIDDING	

PROJECT STAFF
PROJECT MANAGER: SCOTT TROTTER, P.E.
ENGINEER: TERRY HITEKAMP, P.E.
ENGINEER:
ENGINEER:
TECHNICIAN: MIKE DAVISON
TECHNICIAN:

TROTTER ASSOCIATES, INC.
ENGINEERS AND SURVEYORS
400 W. Nelson Roadd, Suite D
Oswego, Illinois 60543
Ph. 630-587-0170 • Fax 630-587-0175

The Reserve at Hudson Crossing - Roadway Improvements
Drainage Plan and Profile
Adams Street Sta 24+50 to Sta 27+50
Oswego, Kendall County, Illinois

Project No.: SH0002
File Name: 45_DRAIN_P&P_ADAMS.dgn
Issue Date: 3/1/2019
Scale: HORIZ: 1" = 20' VERT: 1" = 5'
Sheet Number
45

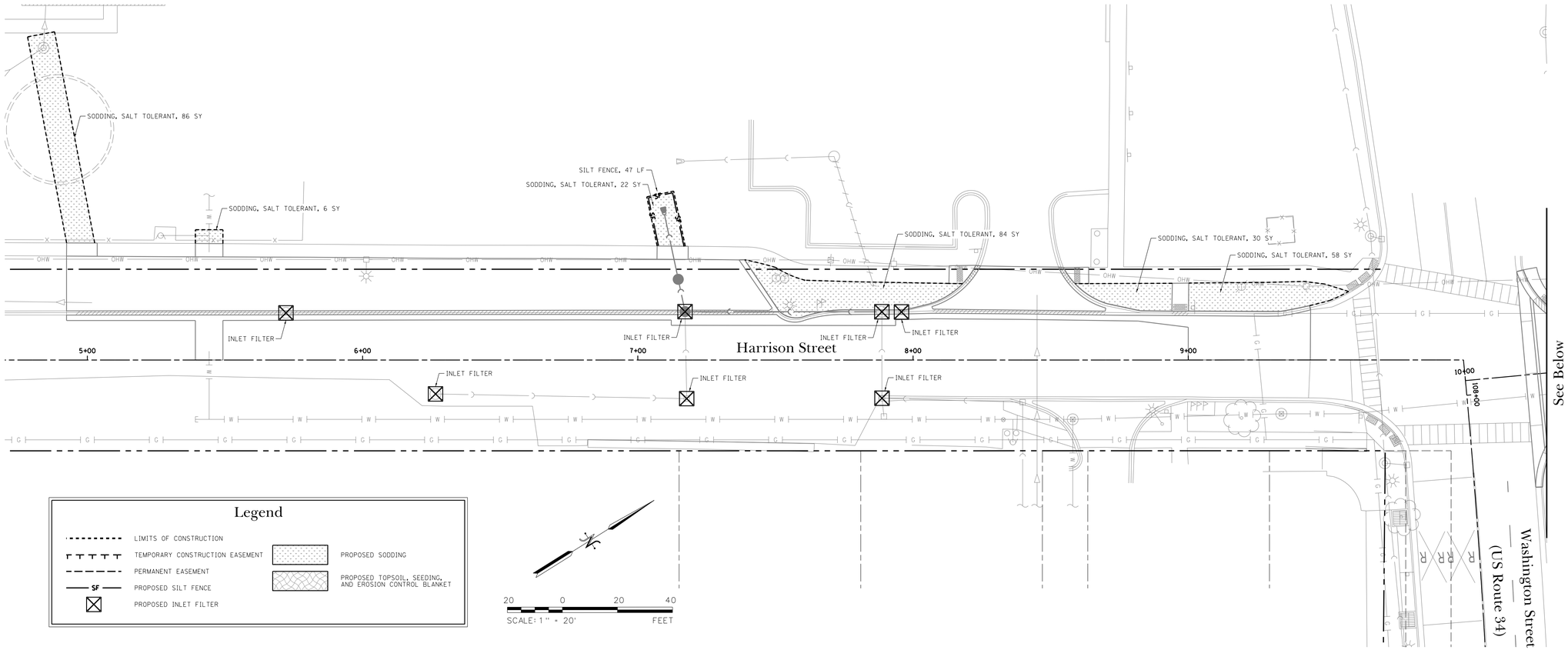

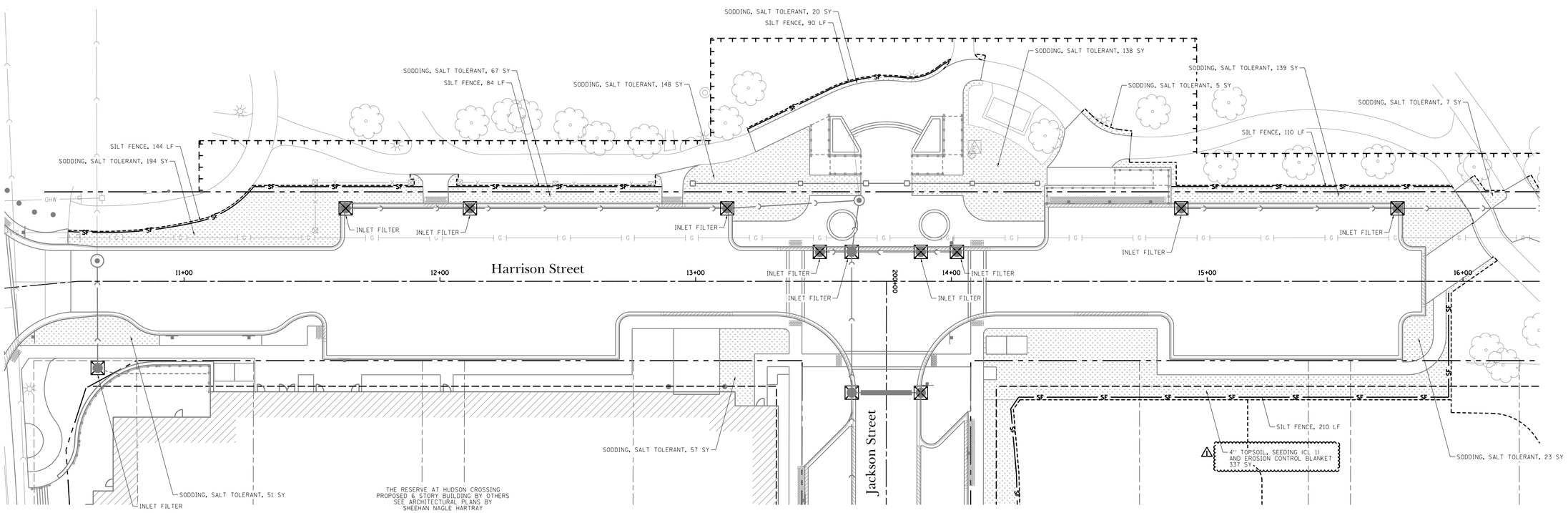

DATE	REVISIONS	ISSUE
3/1/19	ADDENDUM #1	1.
2/21/19	ISSUED FOR BIDDING	

PROJECT STAFF

PROJECT MANAGER:	SCOTT TROTTER, P.E.
ENGINEER:	TERRY THEYKAMP, P.E.
ENGINEER:	
ENGINEER:	
TECHNICIAN:	MIKE DAVISON
TECHNICIAN:	

TROTTER ASSOCIATES, INC.
ENGINEERS AND SURVEYORS
4019 W. Main Road, Suite D
Oswego, Illinois 60543
Ph. 630-587-0170 • Fax 630-587-0175

The Reserve at Hudson Crossing - Roadway Improvements

Erosion Contron Plan - Harrison Street

Oswego, Kendall County, Illinois

Project No.:	SH0002
File Name:	46_EROS_HAR.dgn
Issue Date:	3/1/2019
Scale:	1" = 20'
Sheet Number	46

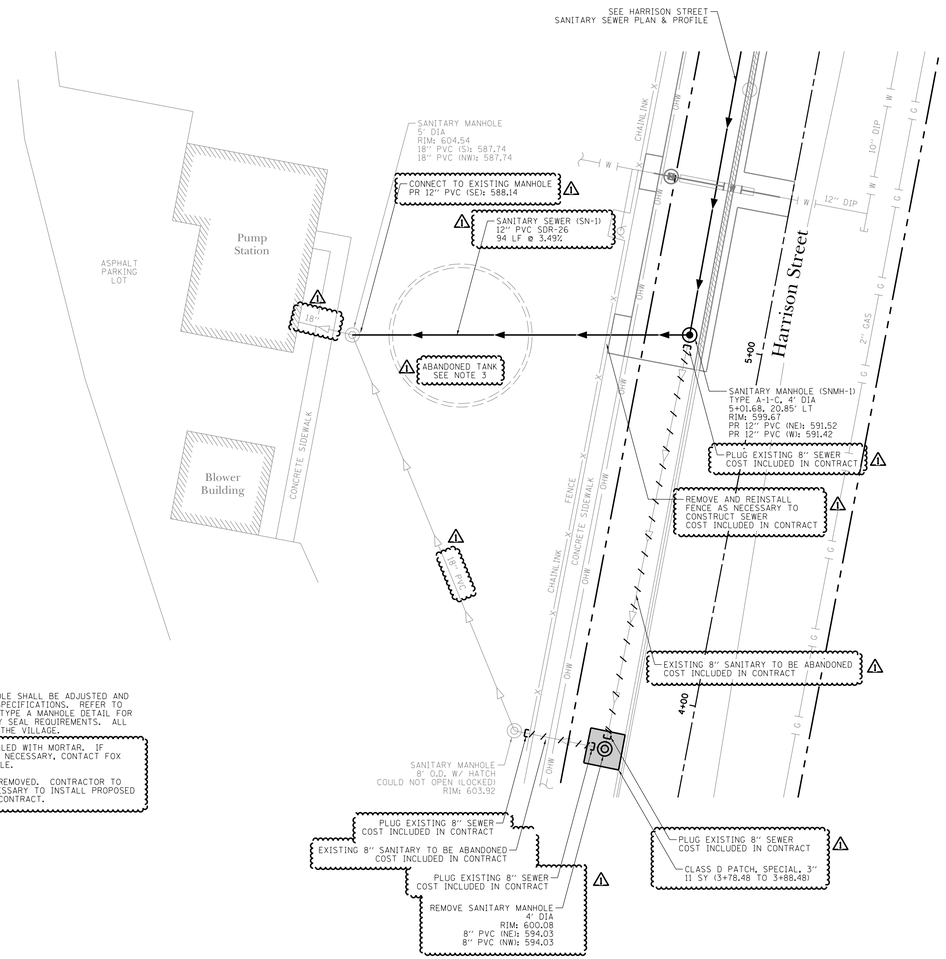

CONNECTION TO EXISTING MANHOLE

1. ANY FULLY EXPOSED PORTION OF THE EXISTING SANITARY MANHOLE SHALL BE ADJUSTED AND REHABILITATED PER FOX METRO WATER RECLAMATION DISTRICT SPECIFICATIONS. REFER TO FOX METRO WATER RECLAMATION DISTRICT GENERAL NOTES AND TYPE A MANHOLE DETAIL FOR FRAME ADJUSTMENT AND/OR BARREL JOINT SEALING AND CHIMNEY SEAL REQUIREMENTS. ALL LIDS SHALL REMAIN AT GRADE UNLESS OTHERWISE DIRECTED BY THE VILLAGE.
2. EXISTING SEWERS TO BE ABANDONED SHALL BE PLUGGED AND FILLED WITH MORTAR. IF EXCAVATED, THIS CAN BE DONE OUTSIDE EXISTING MANHOLE. IF NECESSARY, CONTACT FOX METRO WATER RECLAMATION DISTRICT TO ACCESS LOCKED MANHOLE.
3. EXISTING TANK ABANDONED IN PLACE. TOP 4' ± OF TANK WAS REMOVED. CONTRACTOR TO REMOVE DEBRIS AND/OR ADDITIONAL SECTIONS OF TANK AS NECESSARY TO INSTALL PROPOSED SANITARY SEWER. COST OF ADDITIONAL REMOVAL INCLUDED IN CONTRACT.

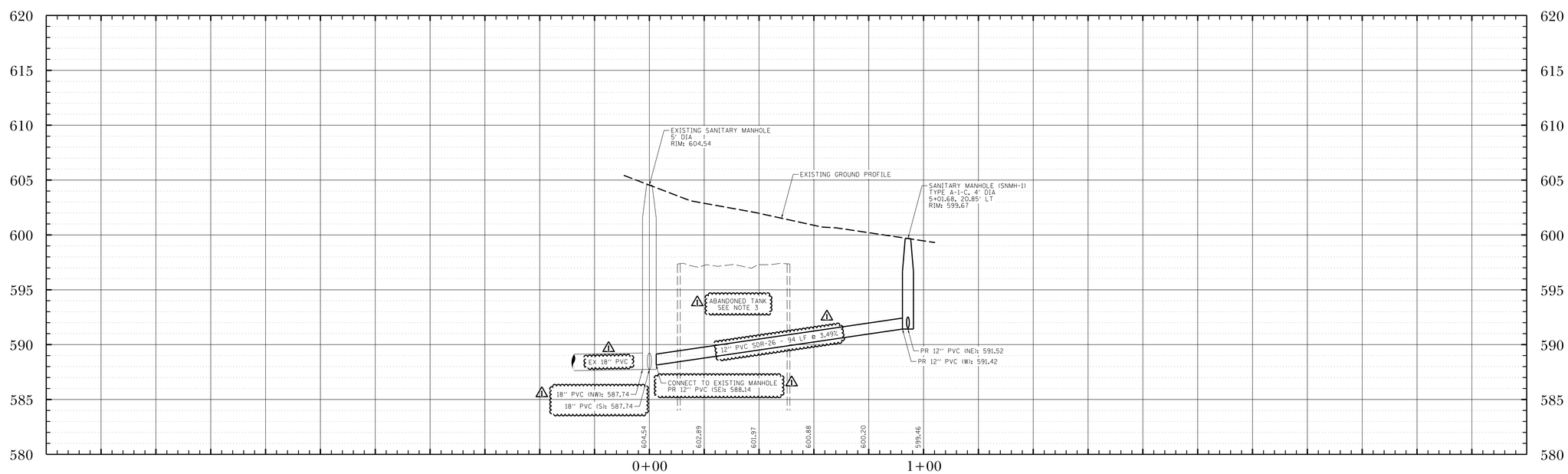

DATE	REVISIONS	ISSUE
3/1/19		
2/21/19	ADDENDUM #1	1.
	ISSUED FOR BIDDING	

PROJECT STAFF

PROJECT MANAGER:	SCOTT TROTTER, P.E.
ENGINEER:	TERRY HITEKAMP, P.E.
ENGINEER:	
ENGINEER:	
TECHNICIAN:	MIKE HAYSON
TECHNICIAN:	

TROTTER ASSOCIATES, INC.
ENGINEERS AND SURVEYORS
40920 N. Main Road, Suite D
Oswego, Illinois 60543
Ph. 630-587-0170 • Fax: 630-587-0175

The Reserve at Hudson Crossing - Roadway Improvements
Sanitary Sewer Plan and Profile
Pump Station to Harrison Street
Oswego, Kendall County, Illinois

Project No.:	SH0002
File Name:	50_SAN_P&P_HAR.dgn
Issue Date:	3/1/2019
Scale:	HORIZ: 1" = 20' VERT: 1" = 5'
Sheet Number	50

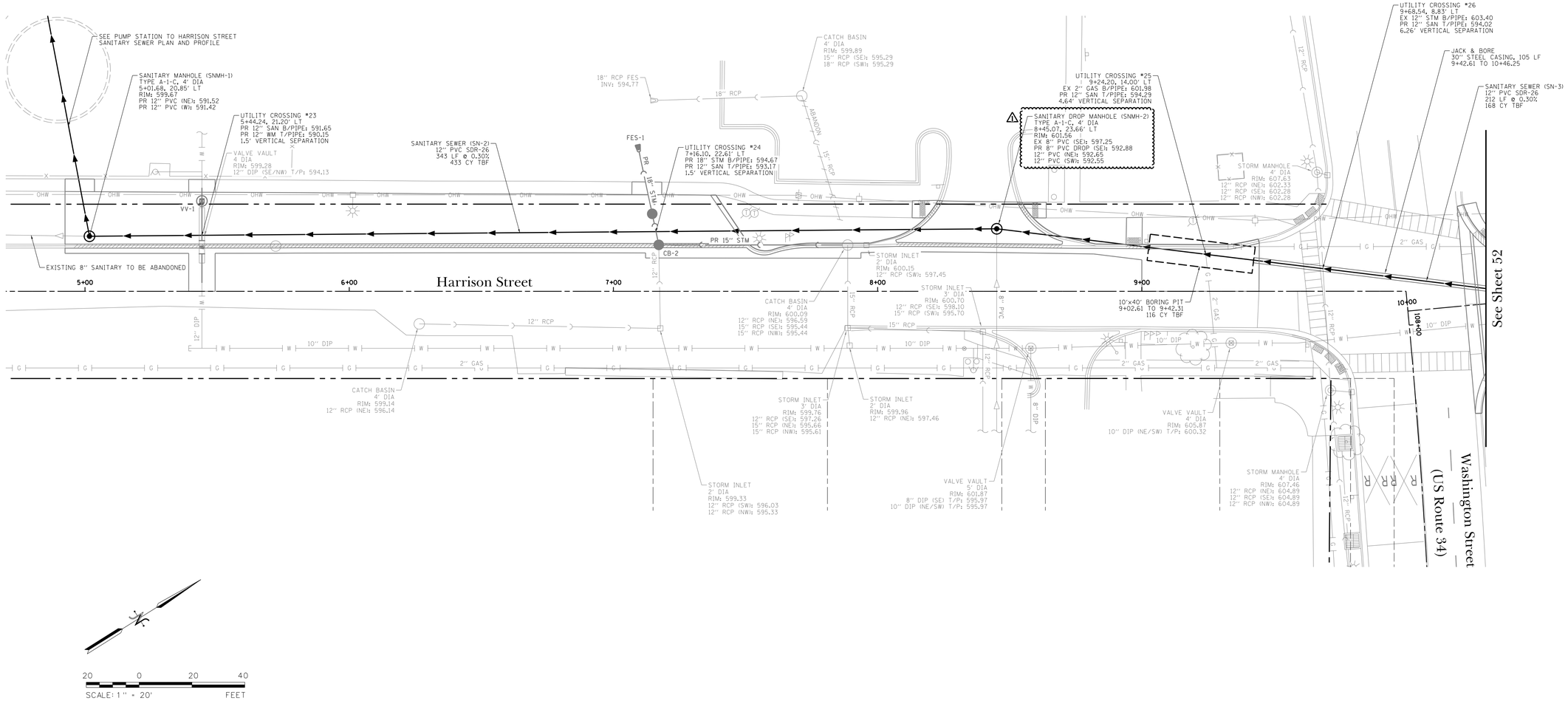

20 0 20 40
SCALE: 1" = 20' FEET

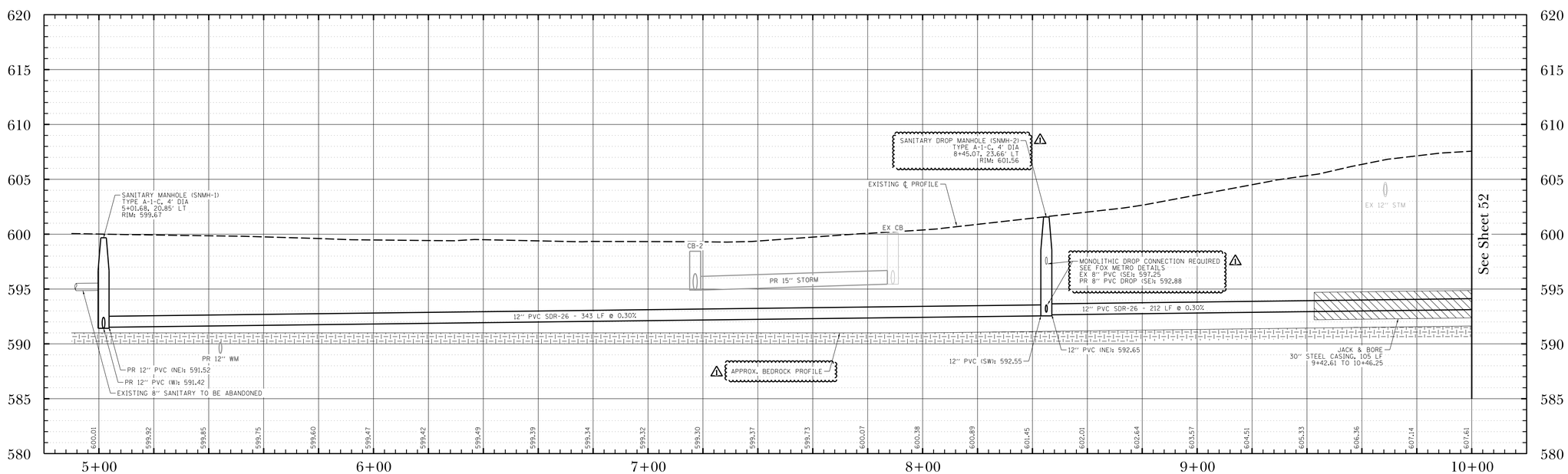

DATE	REVISIONS	ISSUE
3/1/19	ADDENDUM #1	1.
2/21/19	ISSUED FOR BIDDING	

PROJECT STAFF
PROJECT MANAGER: SCOTT TROTTER, P.E.
ENGINEER: TERRY HEFFNAMP, P.E.
ENGINEER:
ENGINEER:
TECHNICIAN: MIKE DAVISON
TECHNICIAN:

TROTTER ASSOCIATES, INC.
ENGINEERS AND SURVEYORS
400/420 Veterans Roadd, Suite D
Glen Ellyn, Illinois 60137
Ph: 630-587-0170 • Fax: 630-587-0175

The Reserve at Hudson Crossing - Roadway Improvements
Sanitary Sewer Plan and Profile
Harrison Street Sta 5+00 to Sta 10+00
Oswego, Kendall County, Illinois

Project No.:	SH0002
File Name:	51_SAN_P&P_HAR.dgn
Issue Date:	3/1/2019
Scale:	HORIZ: 1" = 20' VERT: 1" = 5'
Sheet Number	51

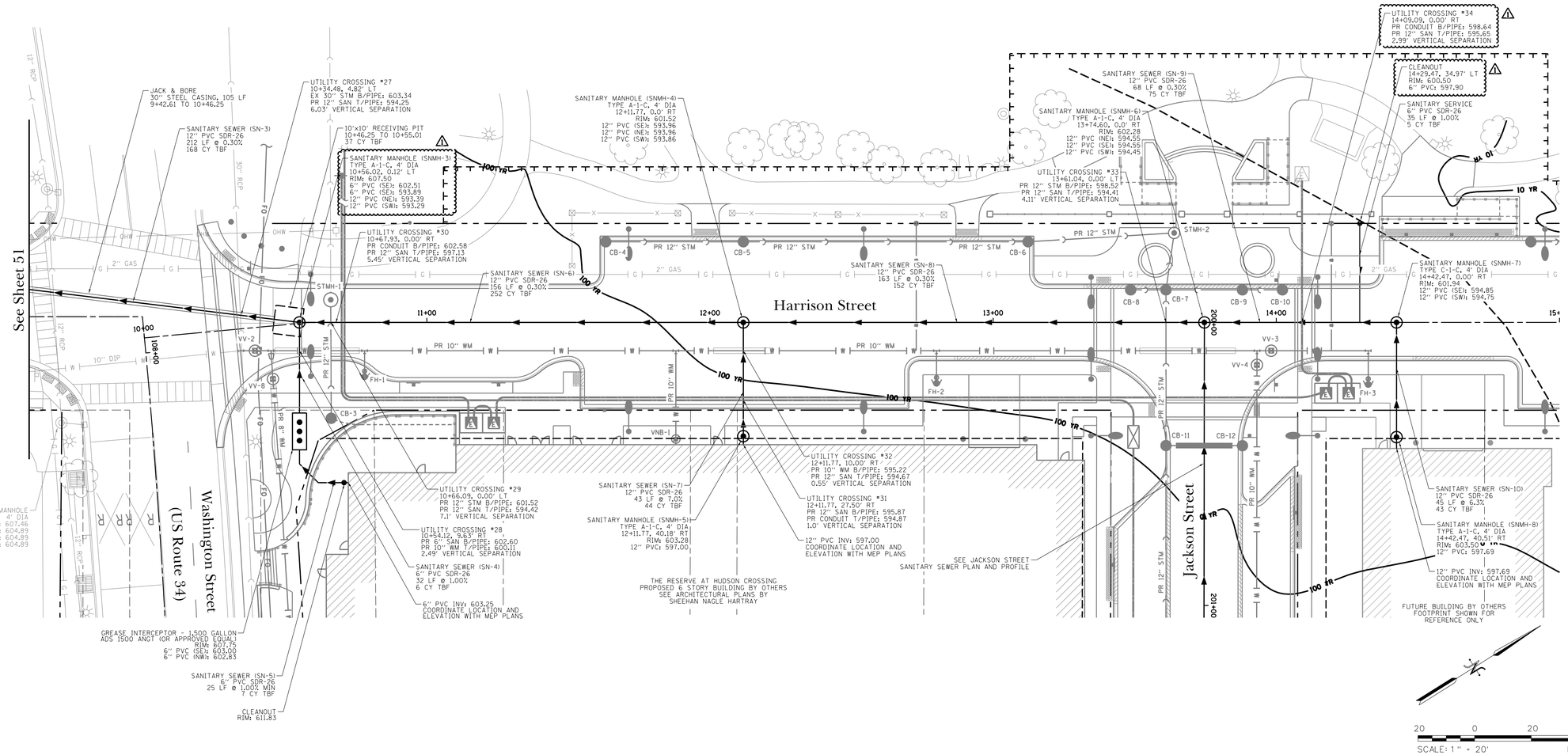

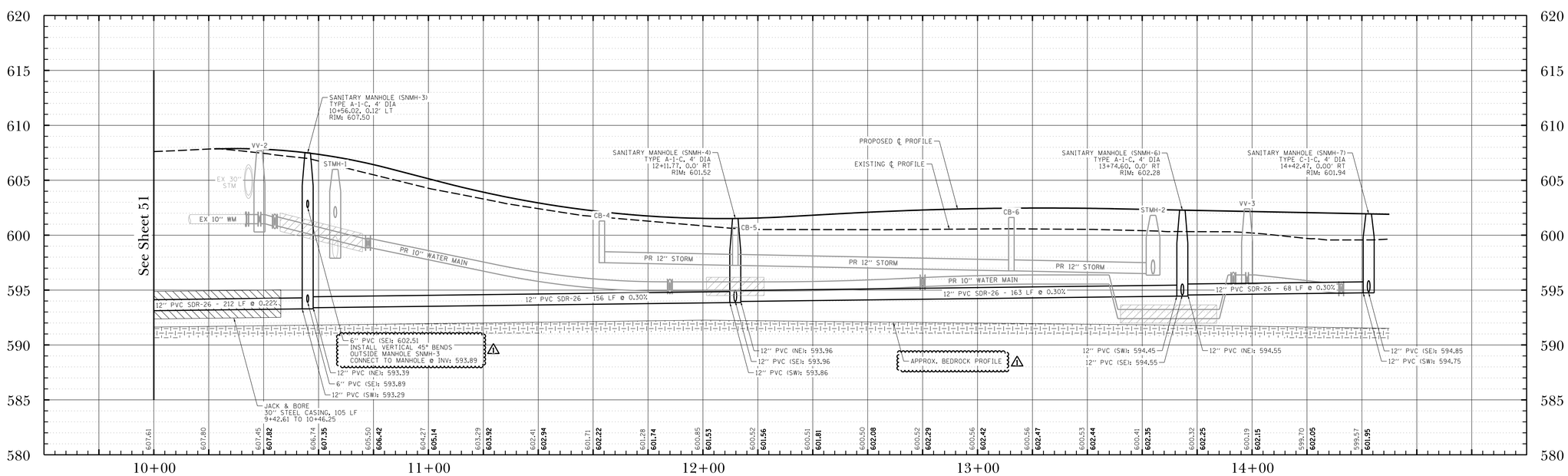

DATE	REVISIONS	ISSUE
3/1/19	ADDENDUM #1	1.
2/21/19	ISSUED FOR BIDDING	

PROJECT STAFF
PROJECT MANAGER: SCOTT TROTTER, P.E.
ENGINEER: TERRY HITEKAMP, P.E.
ENGINEER:
ENGINEER:
TECHNICIAN: MIKE HAYSON
TECHNICIAN:

TROTTER ASSOCIATES, INC.
ENGINEERS AND SURVEYORS
409/201 Mason Roadt, Suite D
Oswego, Illinois 60543
Ph. 630-587-0170 • Fax 630-587-0175

The Reserve at Hudson Crossing - Roadway Improvements

Sanitary Sewer Plan and Profile
Harrison Street Sta 10+00 to Sta 14+50

Oswego, Kendall County, Illinois

Project No.: SH0002
File Name: 52_SAN_P&P_HAR.dgn
Issue Date: 3/1/2019
Scale: HORIZ: 1" = 20' VERT: 1" = 5'
Sheet Number
52

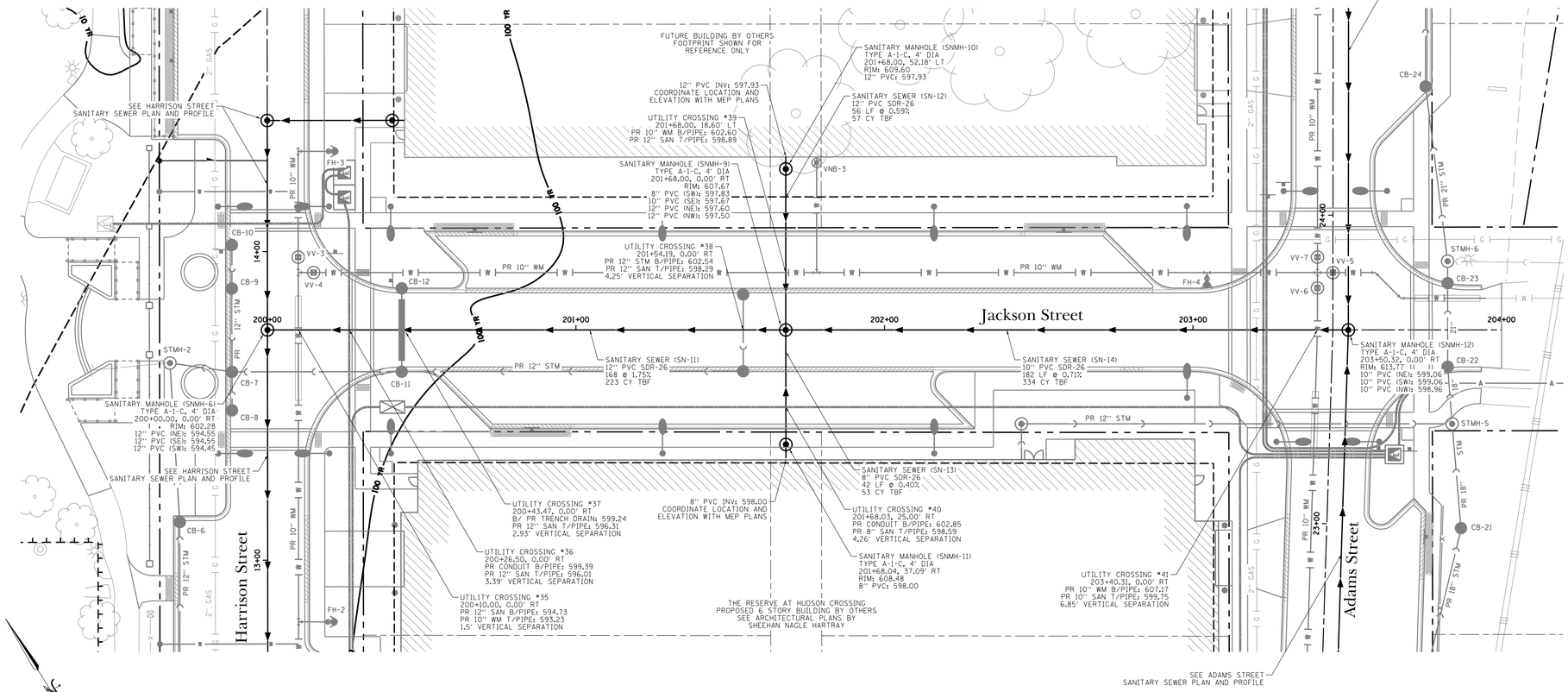

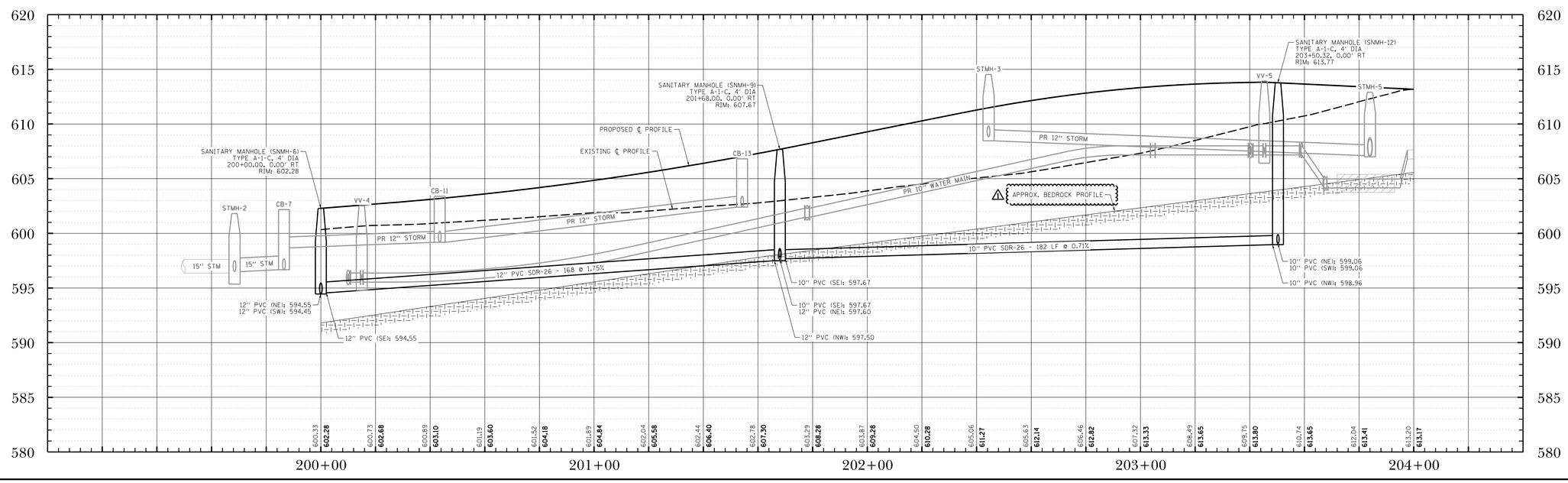

DATE	REVISIONS	ISSUE
3/1/19	ADDENDUM #1	1.
2/21/19	ISSUED FOR BIDDING	

PROJECT STAFF
PROJECT MANAGER: SCOTT TROTTER, P.E.
ENGINEER: TERRY HEFFKAMP, P.E.
ENGINEER:
ENGINEER:
TECHNICIAN: MIKE DAVISON
TECHNICIAN:

TROTTER ASSOCIATES, INC.
ENGINEERS AND SURVEYORS
40W201 Wilson Road, Suite D
Hampshire, Illinois 60140
Ph. 630-587-0170 • Fax 630-587-0175

The Reserve at Hudson Crossing - Roadway Improvements
Sanitary Sewer Plan and Profile
Jackson Street Sta 200+00 to Sta 203+45.32
Oswego, Kendall County, Illinois

Project No.: SH0002
File Name: 53_SAN_P&P_JACK.dgn
Issue Date: 3/1/2019
Scale: HORIZ: 1" = 20' VERT: 1" = 5'
Sheet Number
53

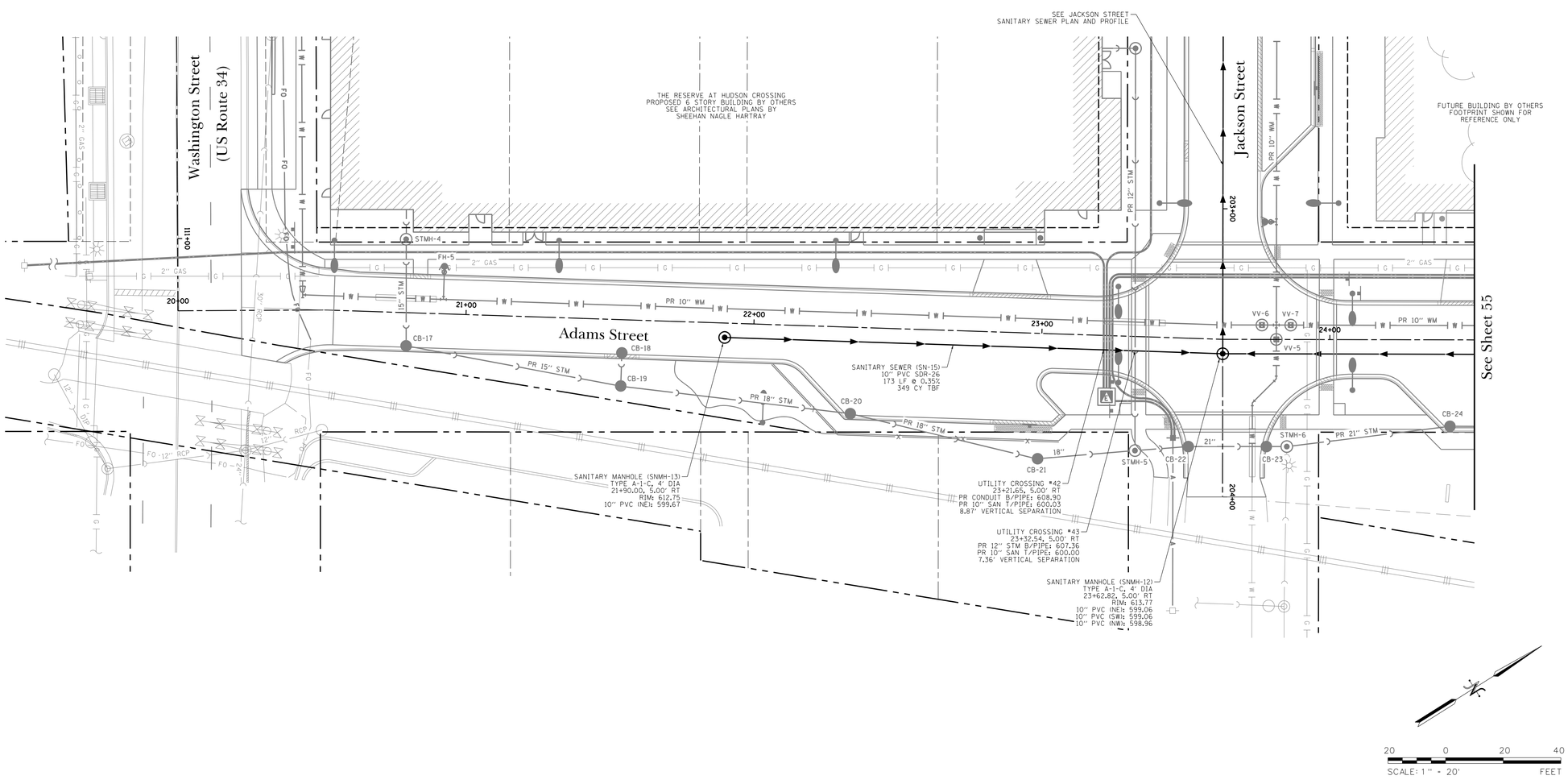

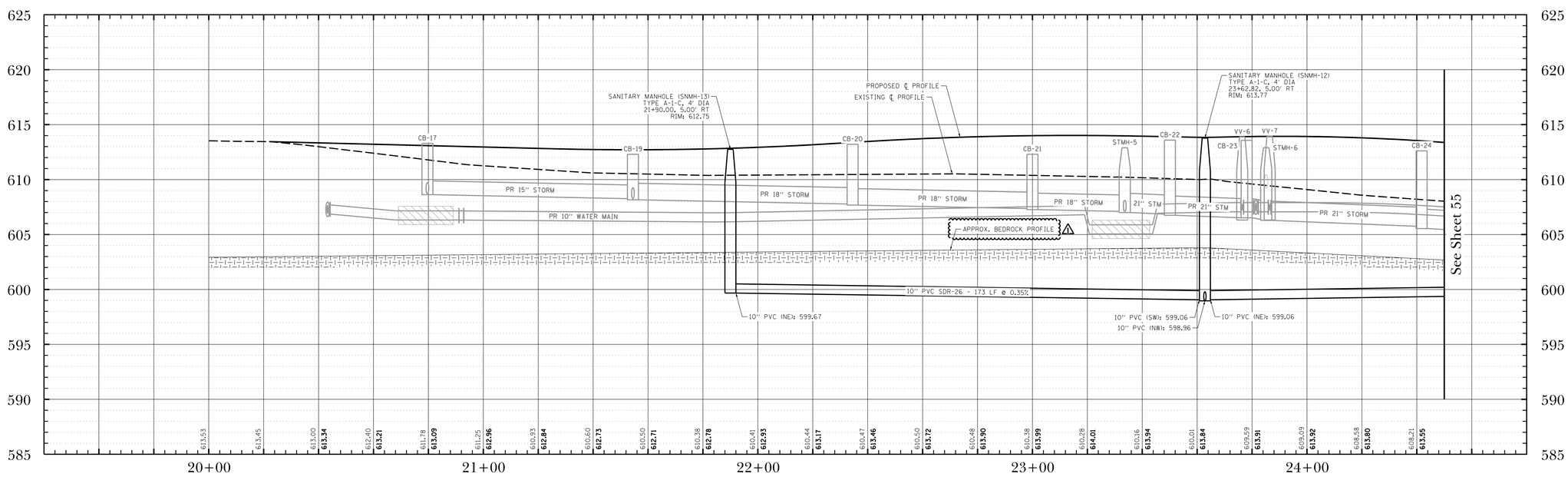

DATE	REVISIONS	ISSUE
3/1/19	ADDENDUM #1	1.
2/21/19	ISSUED FOR BIDDING	

PROJECT STAFF
PROJECT MANAGER: SCOTT TROTTER, P.E.
ENGINEER: TERRY THEYKAMP, P.E.
ENGINEER:
ENGINEER:
TECHNICIAN: MIKE DAVISON
TECHNICIAN:

TROTTER ASSOCIATES, INC.
ENGINEERS AND SURVEYORS
400-C N. Mason Road, Suite D
Wentzville, Missouri 63385
Ph: 630-587-0170 • Fax: 630-587-0175

The Reserve at Hudson Crossing - Roadway Improvements

Sanitary Sewer Plan and Profile
Adams Street Sta 20+00 to Sta 24+50

Oswego, Kendall County, Illinois

Project No.: SH0002
File Name: 54_SAN_P&P_ADAMS.dgn
Issue Date: 3/1/2019
Scale: HORIZ: 1" = 20' VERT: 1" = 5'
Sheet Number
54

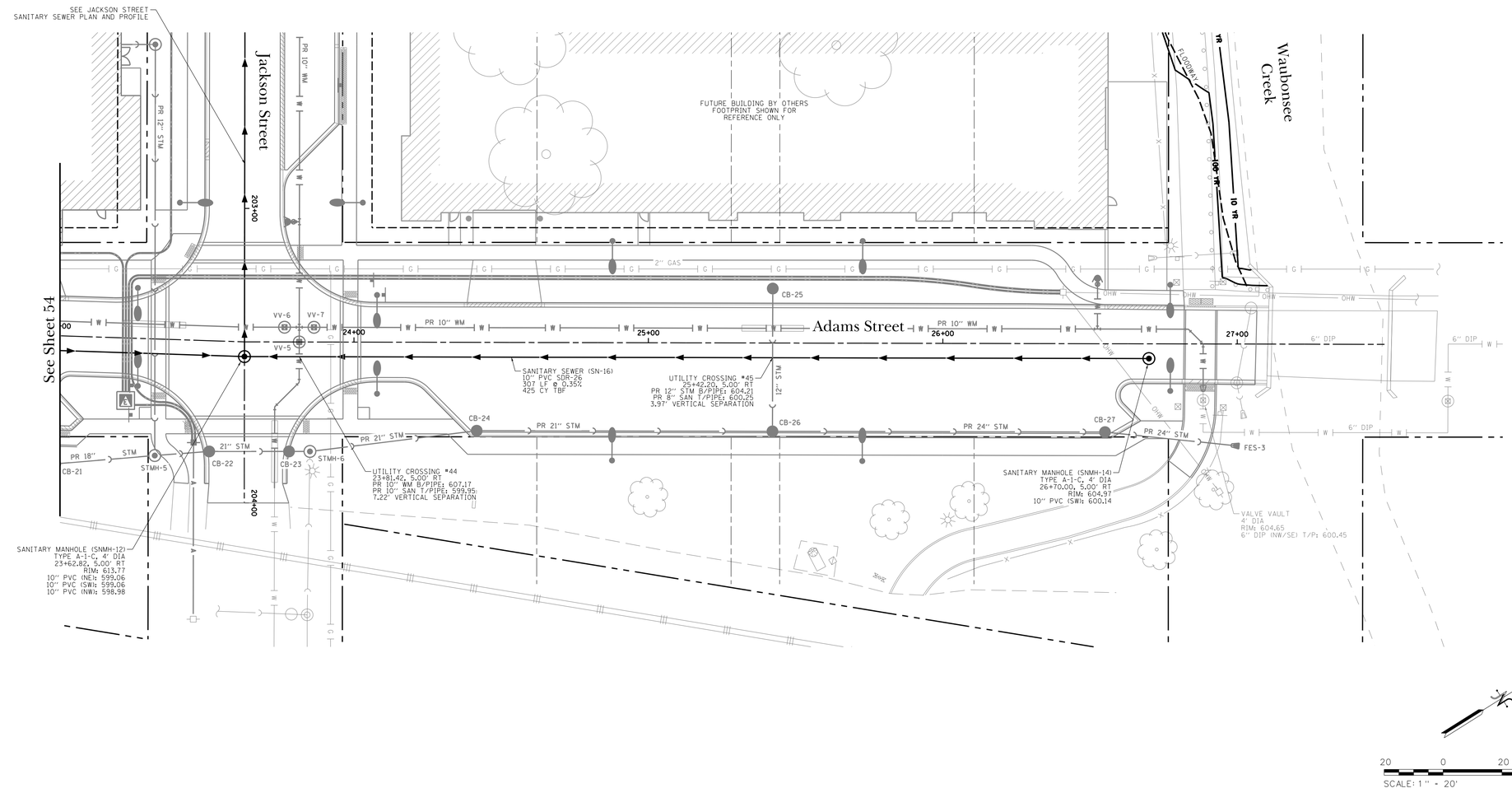

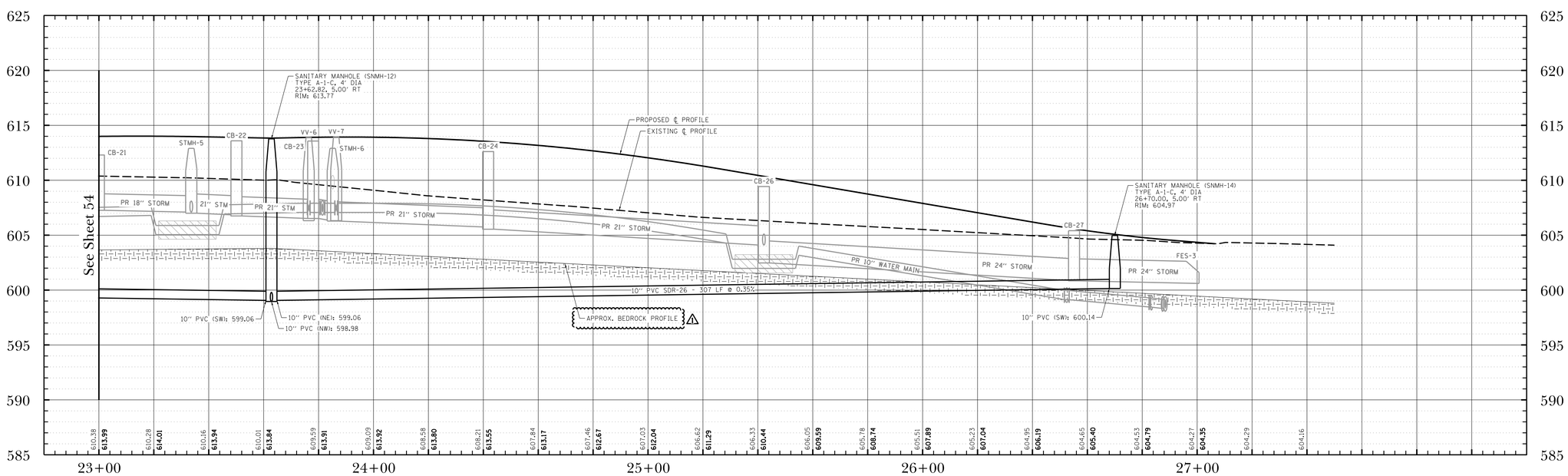

DATE	REVISIONS	ISSUE
3/1/19	ADDENDUM #1	1.
2/21/19	ISSUED FOR BIDDING	

PROJECT STAFF
PROJECT MANAGER: SCOTT TROTTER, P.E.
ENGINEER: TERRY HITEKAMP, P.E.
ENGINEER:
ENGINEER:
TECHNICIAN: MIKE DAVISON
TECHNICIAN:

TROTTER ASSOCIATES, INC.
ENGINEERS AND SURVEYORS
400 W. Velasco Roadt, Suite D
Oswego, Illinois 60543
Ph: 630-587-0170 • Fax: 630-587-0175

The Reserve at Hudson Crossing - Roadway Improvements
Sanitary Plan and Profile
Adams Street Sta 23+00 to Sta 27+50
Oswego, Kendall County, Illinois

Project No.: SH0002
File Name: 55_SAN_P&P_ADAMS.dgn
Issue Date: 3/1/2019
Scale: HORIZ: 1" = 20' VERT: 1" = 5'
Sheet Number
55

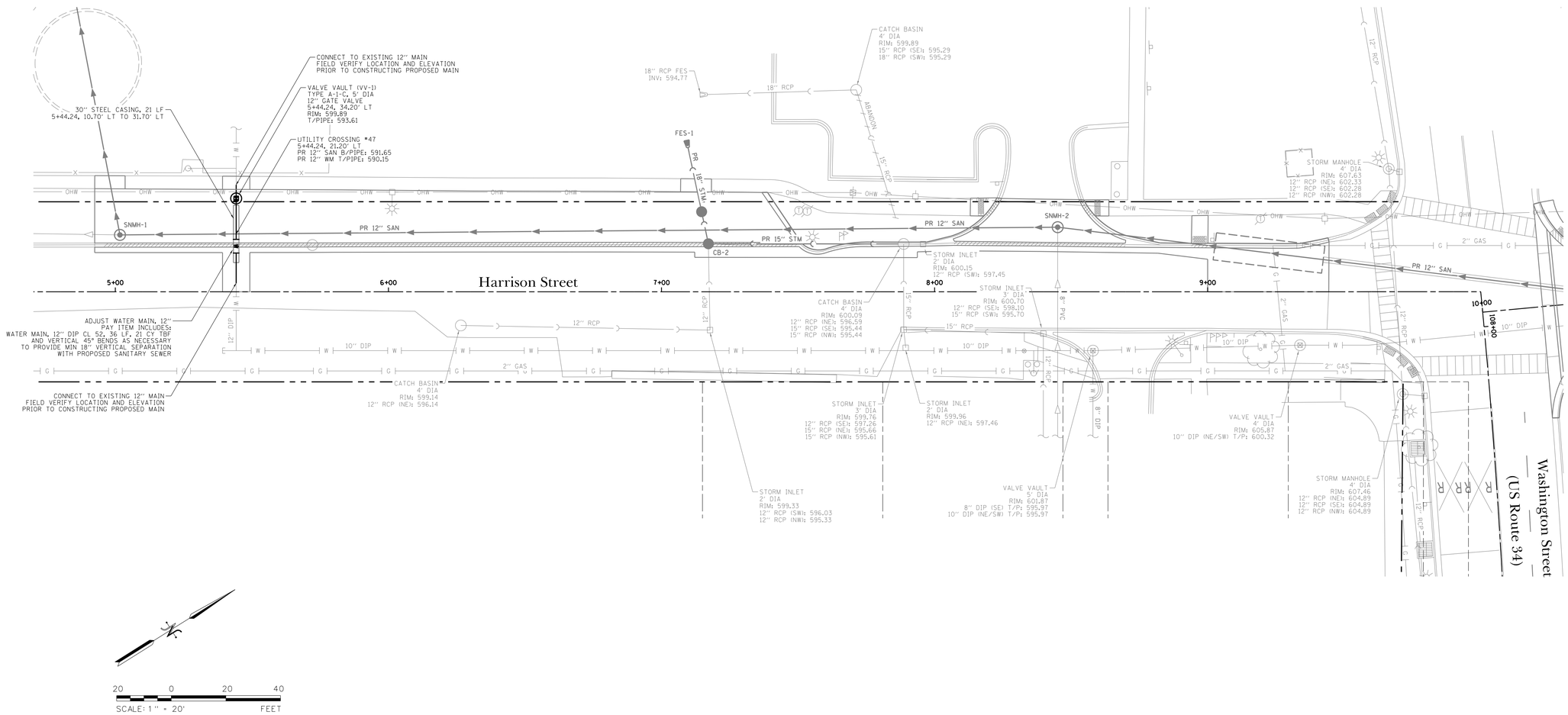

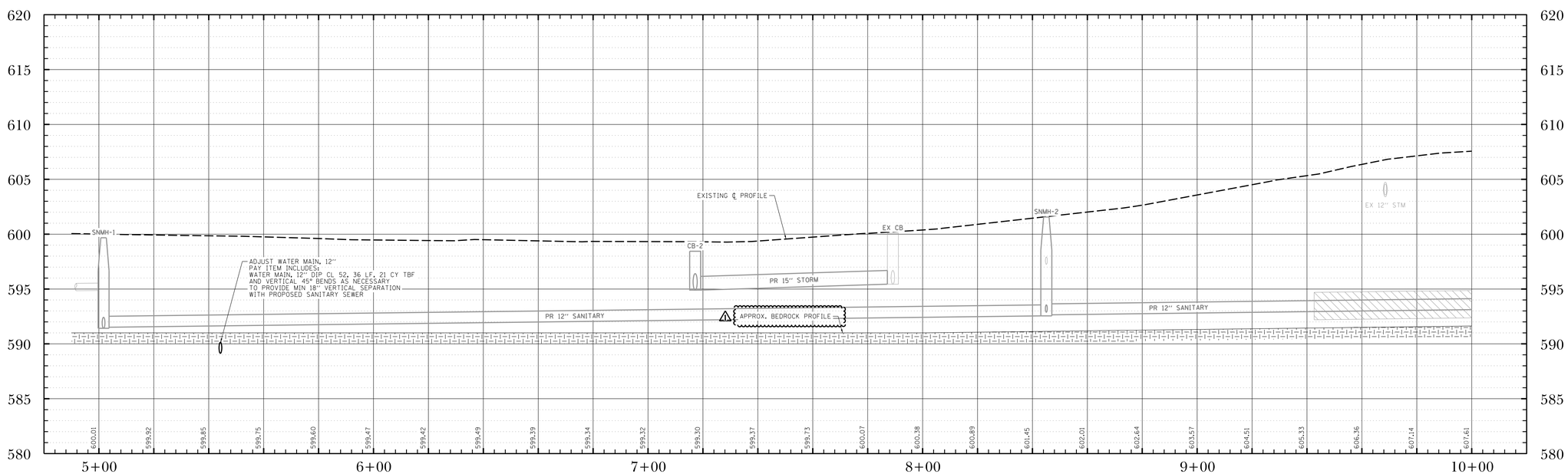

DATE	REVISIONS	ISSUE
3/1/19	ADDENDUM #1	1.
2/21/19	ISSUED FOR BIDDING	

PROJECT STAFF
PROJECT MANAGER: SCOTT TROTTER, P.E.
ENGINEER: TERRY HITEKAMP, P.E.
ENGINEER:
ENGINEER:
TECHNICIAN: MIKE DAVISON
TECHNICIAN:

TROTTER ASSOCIATES, INC.
ENGINEERS AND SURVEYORS
4019 W. Velasco Roadt, Suite D
Plainfield, Illinois 60586
Ph: 630-587-0170 • Fax: 630-587-0175

The Reserve at Hudson Crossing - Roadway Improvements
Water Main Plan and Profile
Harrison Street Sta 5+00 to Sta 10+00
Oswego, Kendall County, Illinois

Project No.: SH0002
File Name: 56_WM_P&P_HAR.dgn
Issue Date: 3/1/2019
Scale: HORIZ: 1" = 20' VERT: 1" = 5'
Sheet Number
56

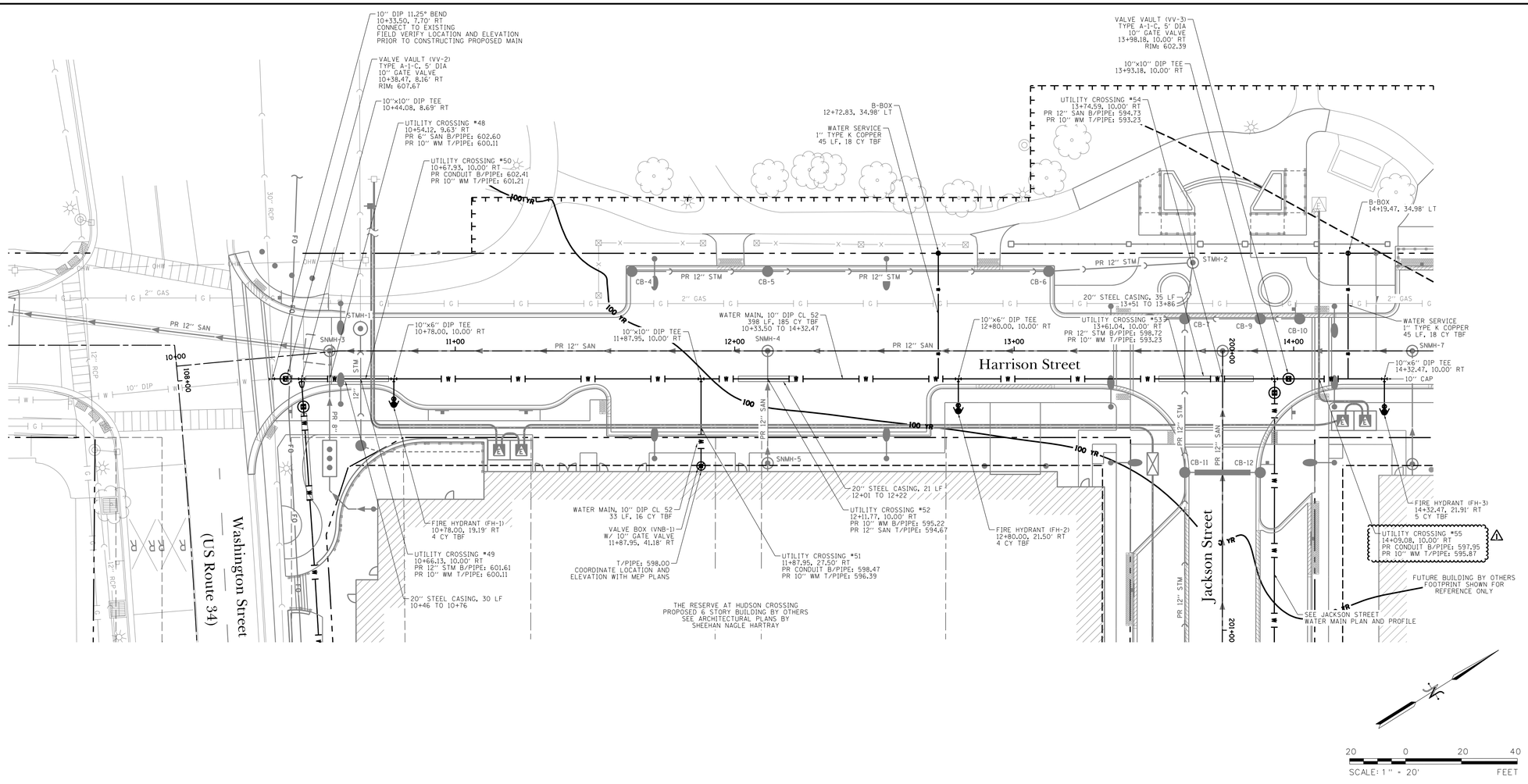

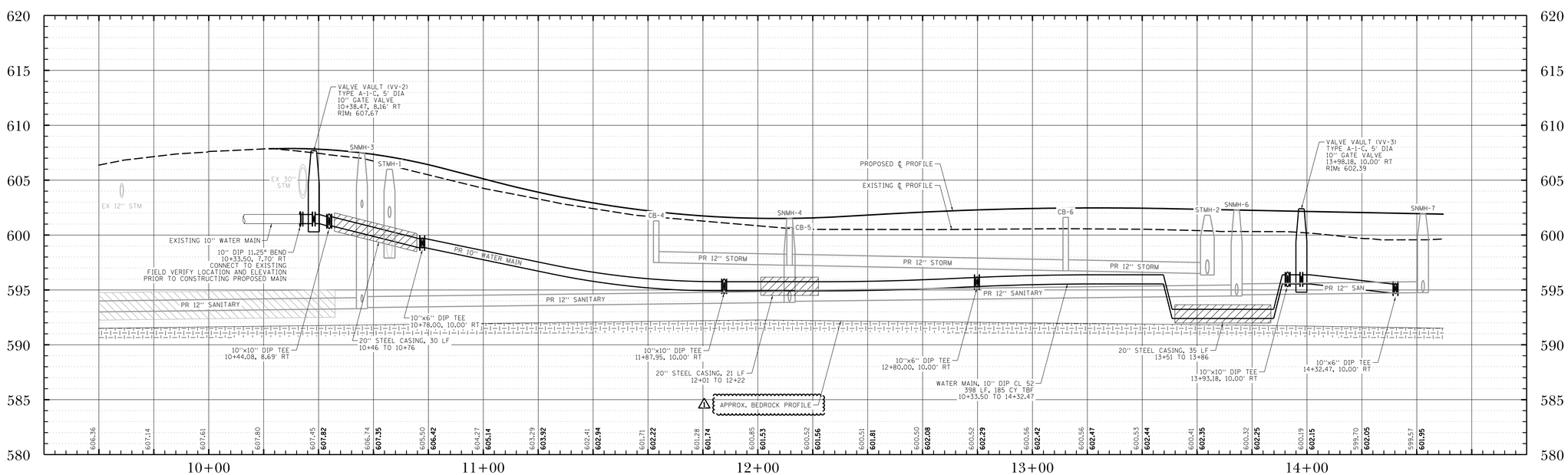

DATE	REVISIONS	ISSUE
3/1/19	ADDENDUM #1	1.
2/21/19	ISSUED FOR BIDDING	

PROJECT STAFF
PROJECT MANAGER: SCOTT TROTTER, P.E.
ENGINEER: TERRY HEFFKAMP, P.E.
ENGINEER:
ENGINEER:
TECHNICIAN: MIKE HAYSON
TECHNICIAN:

TROTTER ASSOCIATES, INC.
ENGINEERS AND SURVEYORS
40W201 Wilson Roadt, Suite D
St. Charles, Illinois 60175
Ph. 630-587-0170 • Fax: 630-587-0175

The Reserve at Hudson Crossing - Roadway Improvements
Water Main Plan and Profile
Harrison Street Sta 10+00 to Sta 14+50
Oswego, Kendall County, Illinois

Project No.:	SH0002
File Name:	57_WM_P&P_HAR.dgn
Issue Date:	3/1/2019
Scale:	HORIZ: 1" = 20' VERT: 1" = 5'
Sheet Number	57

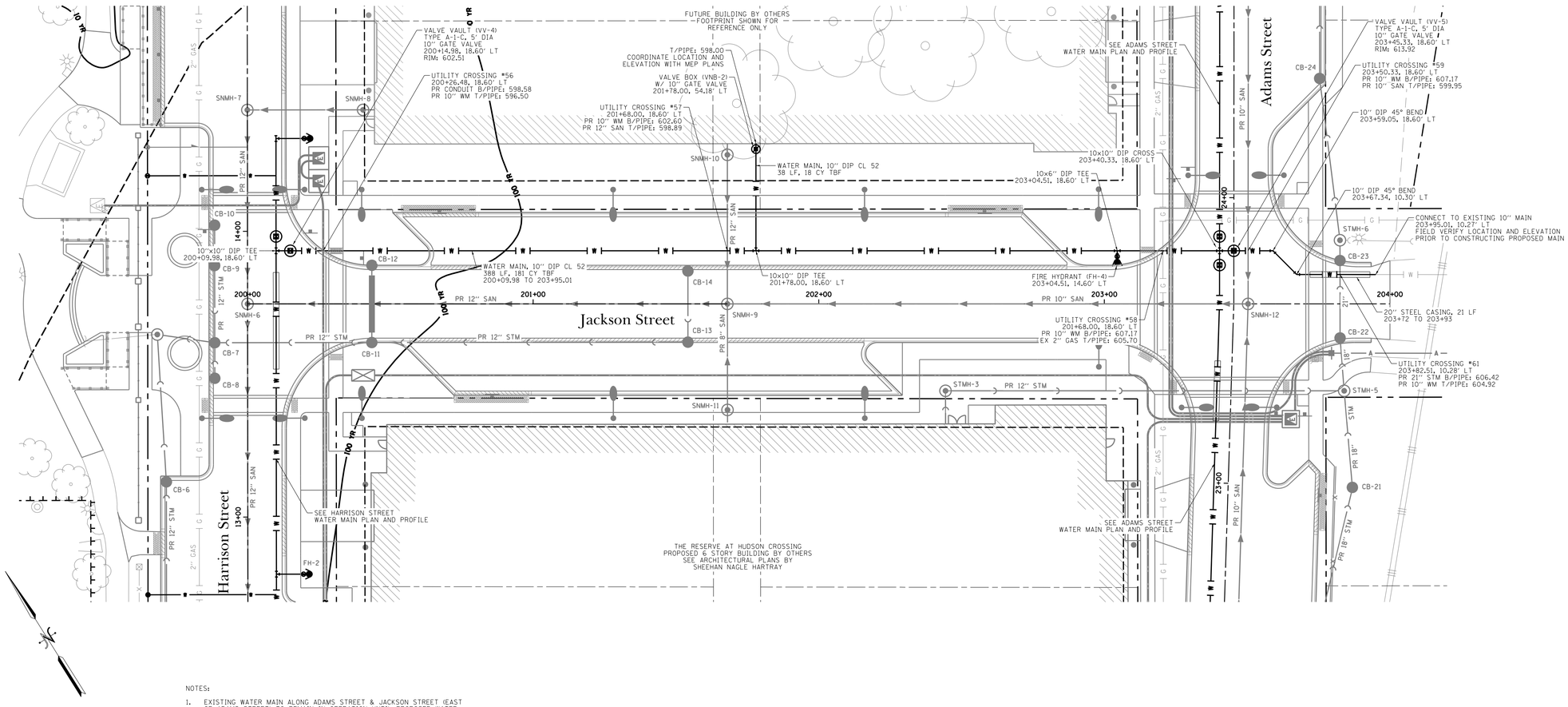

NOTES:

1. EXISTING WATER MAIN ALONG ADAMS STREET & JACKSON STREET (EAST OF ADAMS STREET) TO REMAIN IN OPERATION UNTIL PROPOSED WATER MAIN HAS BEEN CONSTRUCTED, TESTED, AND ACCEPTED.

20 0 20 40
SCALE: 1" = 20' FEET

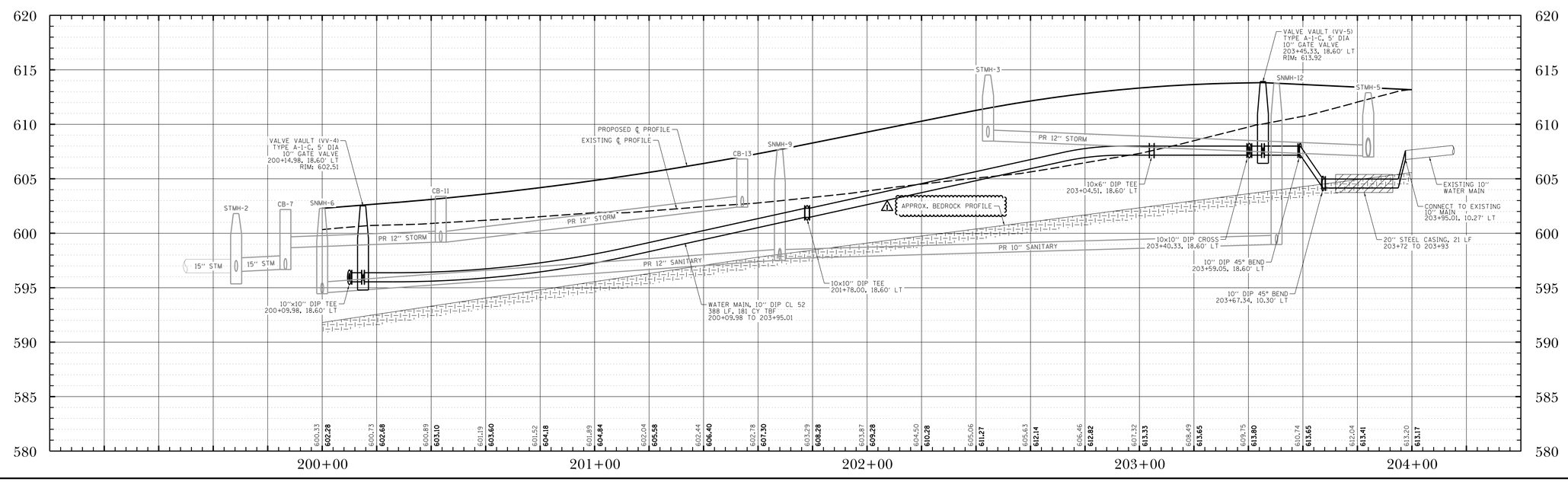

DATE	REVISIONS	ISSUE
3/1/19	ADDENDUM #1	1.
2/21/19	ISSUED FOR BIDDING	

PROJECT STAFF
PROJECT MANAGER: SCOTT TROTTER, P.E.
ENGINEER: TERRY HEFFKAMP, P.E.
ENGINEER:
ENGINEER:
TECHNICIAN: MIKE DAVISON
TECHNICIAN:

TROTTER ASSOCIATES, INC.
ENGINEERS AND SURVEYORS
400/420 N. Chase Rd#B, Suite D
Oswego, Illinois 60543
Ph. 630-587-0170 • Fax: 630-587-0175

The Reserve at Hudson Crossing - Roadway Improvements
Water Main Plan and Profile
Jackson Street Sta 200+00 to Sta 203+45.32
Oswego, Kendall County, Illinois

Project No.: SH0002
File Name: 58_WM_P&P_JACK.dgn
Issue Date: 3/1/2019
Scale: HORIZ: 1" = 20' VERT: 1" = 5'
Sheet Number
58

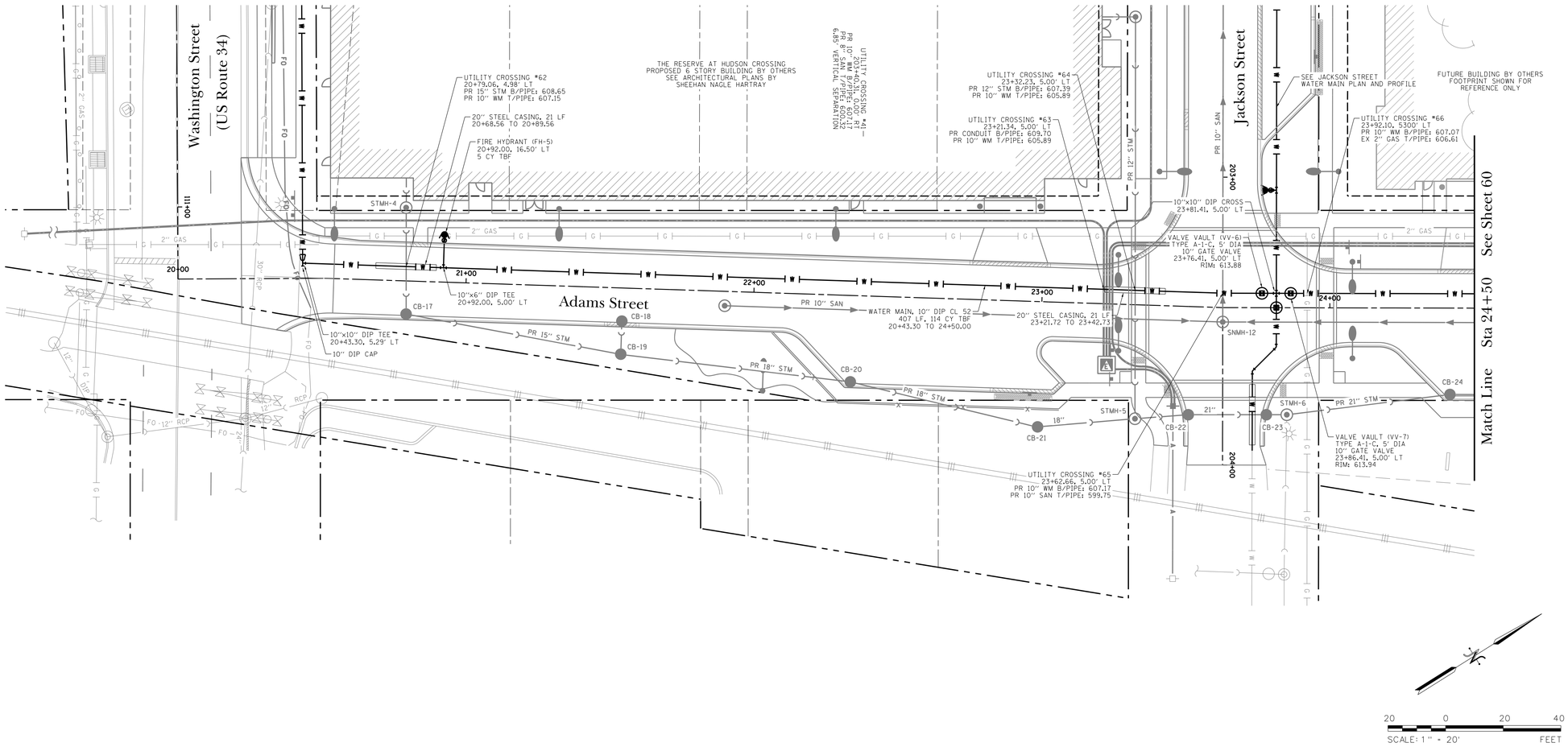

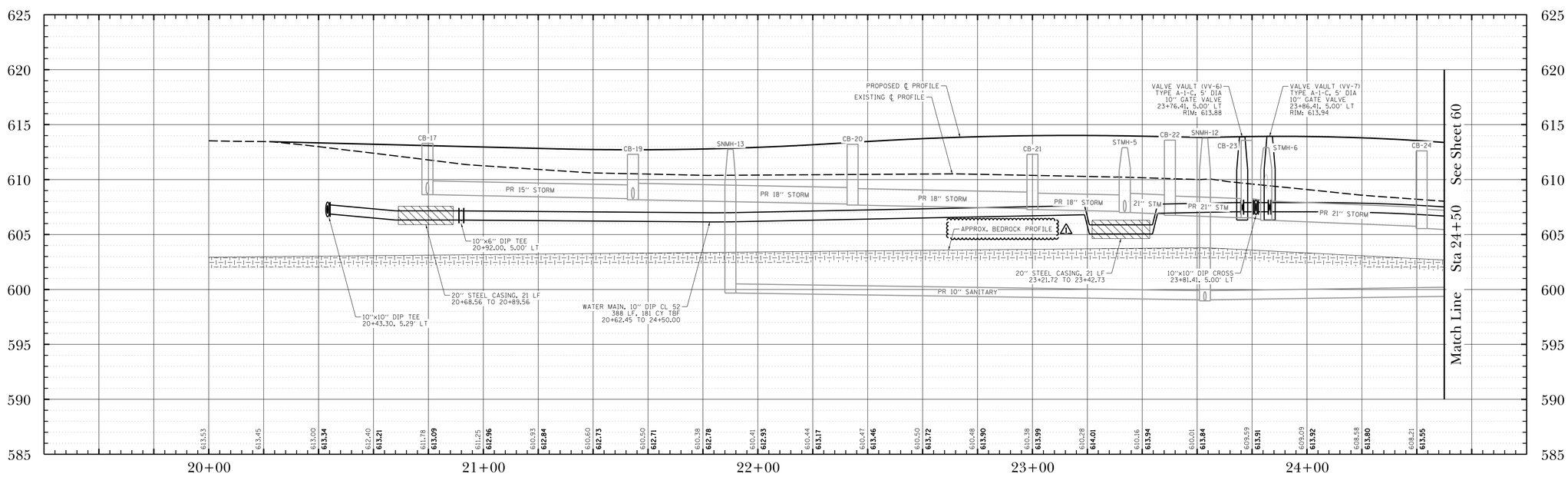

DATE	REVISIONS	ISSUE
3/1/19		
2/21/19	ADDENDUM #1	1.
	ISSUED FOR BIDDING	

PROJECT STAFF

PROJECT MANAGER:	SCOTT TROTTER, P.E.
ENGINEER:	TERRY THEYKAMP, P.E.
ENGINEER:	
ENGINEER:	
TECHNICIAN:	MIKE DAVISON
TECHNICIAN:	

TROTTER
ASSOCIATES, INC.
ENGINEERS AND SURVEYORS
400-C1 Chase Road, Suite D
Oswego, Illinois 60543
Ph. 630-587-0170 • Fax: 630-587-0175

The Reserve at Hudson Crossing - Roadway Improvements
Water Main Plan and Profile
Adams Street Sta 20+00 to Sta 24+50
Oswego, Kendall County, Illinois

Project No.:	SH0002
File Name:	59_WM_P&P_ADAMS.dgn
Issue Date:	3/1/2019
Scale:	HORIZ: 1" = 20' VERT: 1" = 5'
Sheet Number	59

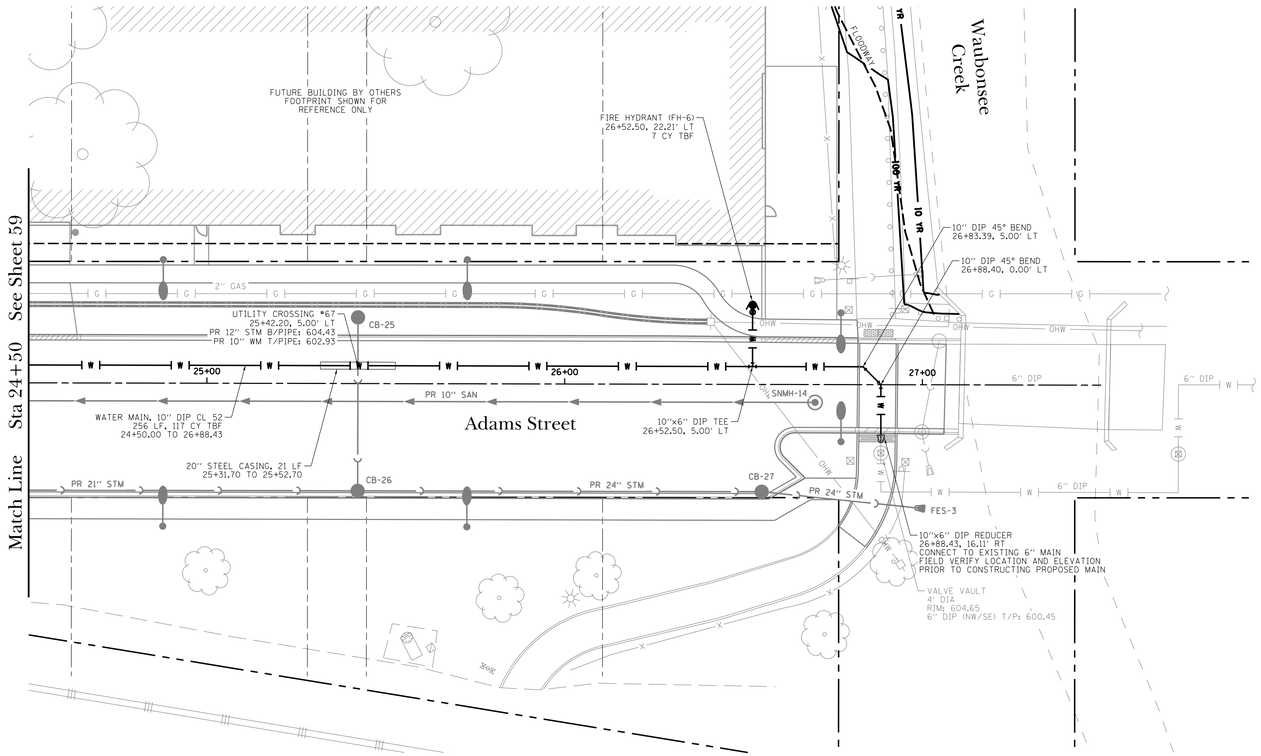

NOTES:

1. EXISTING WATER MAIN ALONG ADAMS STREET & JACKSON STREET (EAST OF ADAMS STREET) TO REMAIN IN OPERATION UNTIL PROPOSED WATER MAIN HAS BEEN CONSTRUCTED, TESTED, AND ACCEPTED.

20 0 20 40
SCALE: 1" = 20' FEET

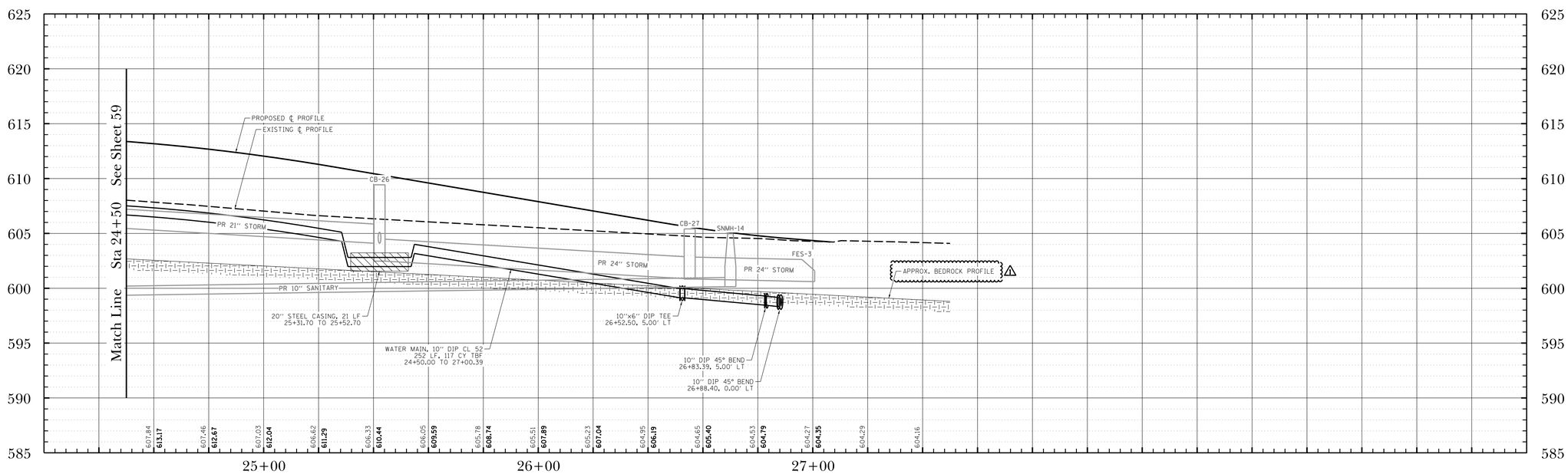

DATE	REVISIONS	ISSUE
3/1/19	ADDENDUM #1	1.
2/21/19	ISSUED FOR BIDDING	

PROJECT STAFF
PROJECT MANAGER: SCOTT TROTTER, P.E.
ENGINEER: TERRY THEYKAMP, P.E.
ENGINEER:
ENGINEER:
TECHNICIAN: MIKE DAVISON
TECHNICIAN:

TROTTER ASSOCIATES, INC.
ENGINEERS AND SURVEYORS
409 ZIEGLER ROAD, SUITE D
YORKVILLE, ILLINOIS 60560
PH: 630-587-0170 • FAX: 630-587-0175

The Reserve at Hudson Crossing - Roadway Improvements
Water Main Plan and Profile
Adams Street Sta 24+50 to Sta 27+50
Oswego, Kendall County, Illinois

Project No.: SH0002
File Name: 60_WM_P&P_ADAMS.dgn
Issue Date: 3/1/2019
Scale: HORIZ: 1" = 20' VERT: 1" = 5'
Sheet Number
60

THE RESERVE AT HUDSON CROSSING
PROPOSED 6 STORY BUILDING BY OTHERS
SEE ARCHITECTURAL PLANS BY
SHEEHAN NAGLE HARTRAY

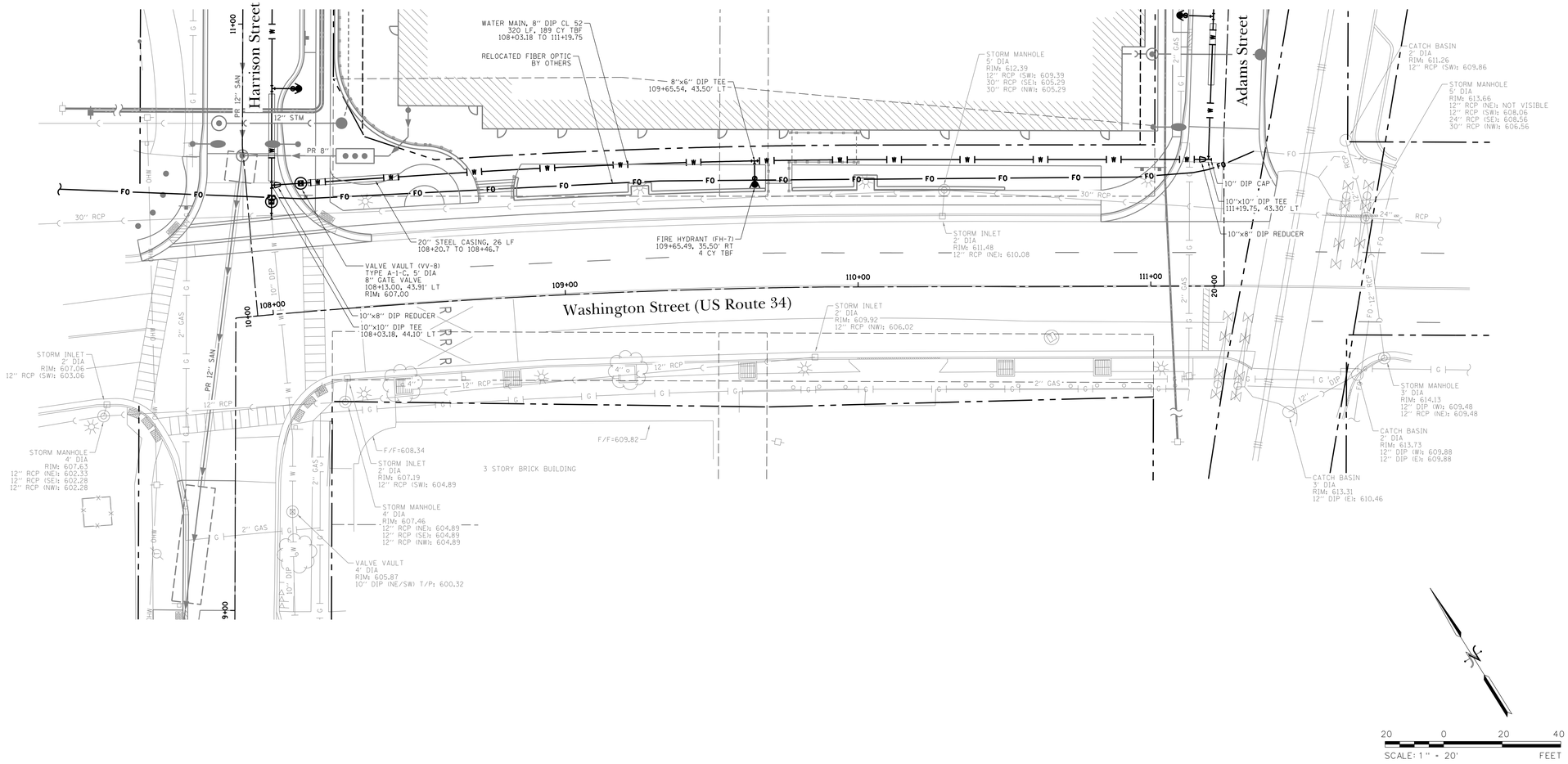

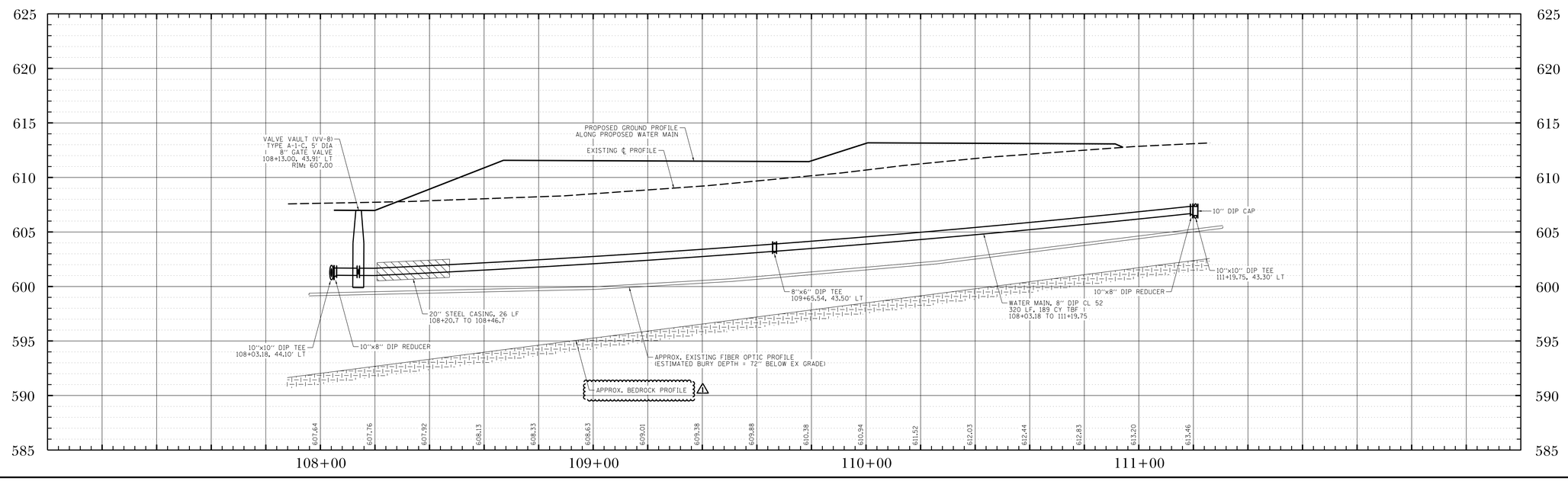

ADDENDUM #1	1.	3/1/19
ISSUED FOR BIDDING		2/21/19

REVISIONS | ISSUE | DATE

PROJECT STAFF

PROJECT MANAGER:	SCOTT TROTTER, P.E.
ENGINEER:	TERRY HEFFKAMP, P.E.
ENGINEER:	
ENGINEER:	
TECHNICIAN:	MIKE DAVISON
TECHNICIAN:	

TROTTER ASSOCIATES, INC.
ENGINEERS AND SURVEYORS
400 W. Velasco Roadt, Suite D
Oswego, IL 60543
Ph: 630-587-0170 • Fax: 630-587-0175

The Reserve at Hudson Crossing - Roadway Improvements
Water Main Plan and Profile
Washington Street Sta 107+94.64 to Sta 111+25.04
Oswego, Kendall County, Illinois

Project No.:	SH0002
File Name:	61_WM_P&P_WASH.dgn
Issue Date:	3/1/2019
Scale:	HORIZ: 1" = 20' VERT: 1" = 5'
Sheet Number	61

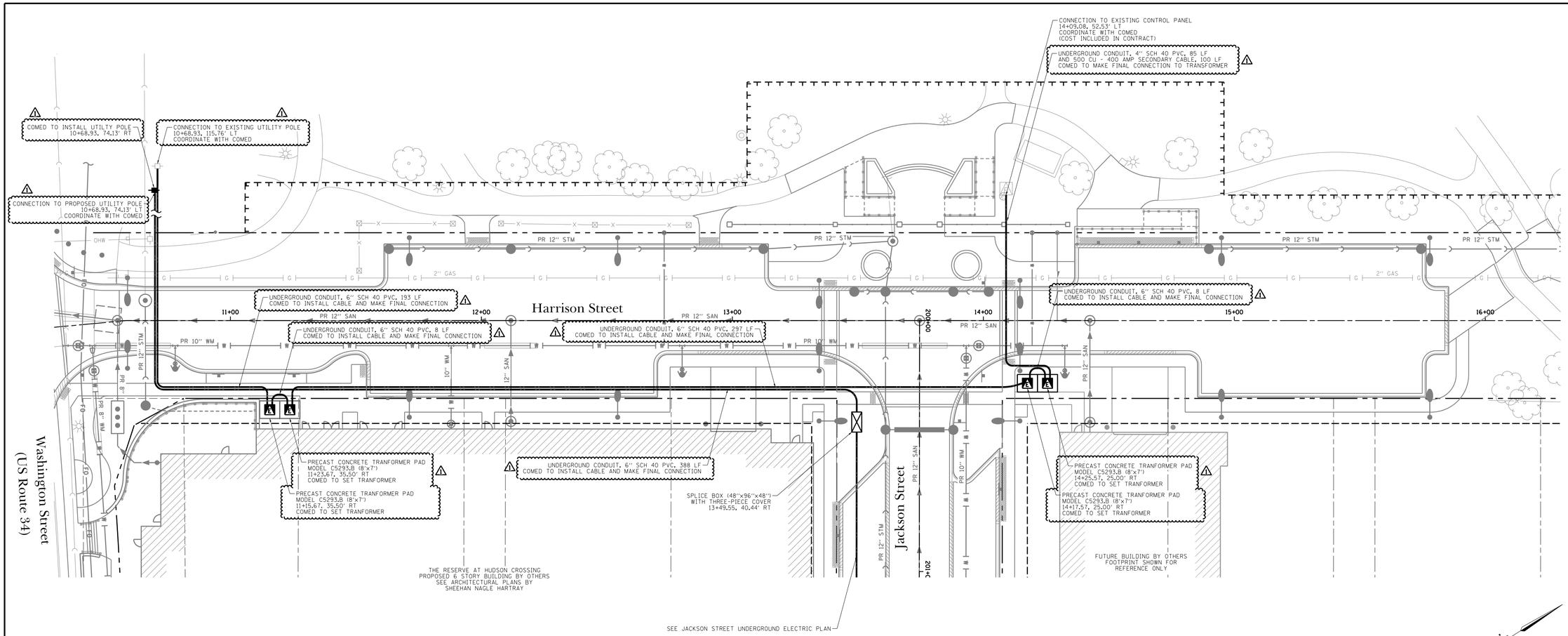

NOTES:

1. ALL ELECTRIC WORK SHALL BE CONSTRUCTED IN ACCORDANCE WITH COMED REQUIREMENTS.
2. RESTORATION OUTSIDE LIMITS OF ROADWAY IMPROVEMENTS SHALL BE INCIDENTAL TO THE CONTRACT.

20 0 20 40
SCALE: 1" = 20' FEET

ISSUE	REVISIONS	DATE
1.	ADDENDUM #1	3/1/19
	ISSUED FOR BIDDING	2/21/19

PROJECT STAFF
PROJECT MANAGER: SCOTT TROTTER, P.E.
ENGINEER: TERRY HEFFKAMP, P.E.
ENGINEER:
ENGINEER:
TECHNICIAN: MIKE HAYSON
TECHNICIAN:

TROTTER ASSOCIATES, INC.
ENGINEERS AND SURVEYORS
400 N. Ottawa Road, Suite D
Oswego, Illinois 60543
Ph. 630-587-0170 • Fax: 630-587-0175

The Reserve at Hudson Crossing - Roadway Improvements

Underground Electric Plan - Harrison Street

Oswego, Kendall County, Illinois

Project No.: SH0002
File Name: 62_ELEC_HAR.dgn
Issue Date: 3/1/2019
Scale: 1" = 20'
Sheet Number
62

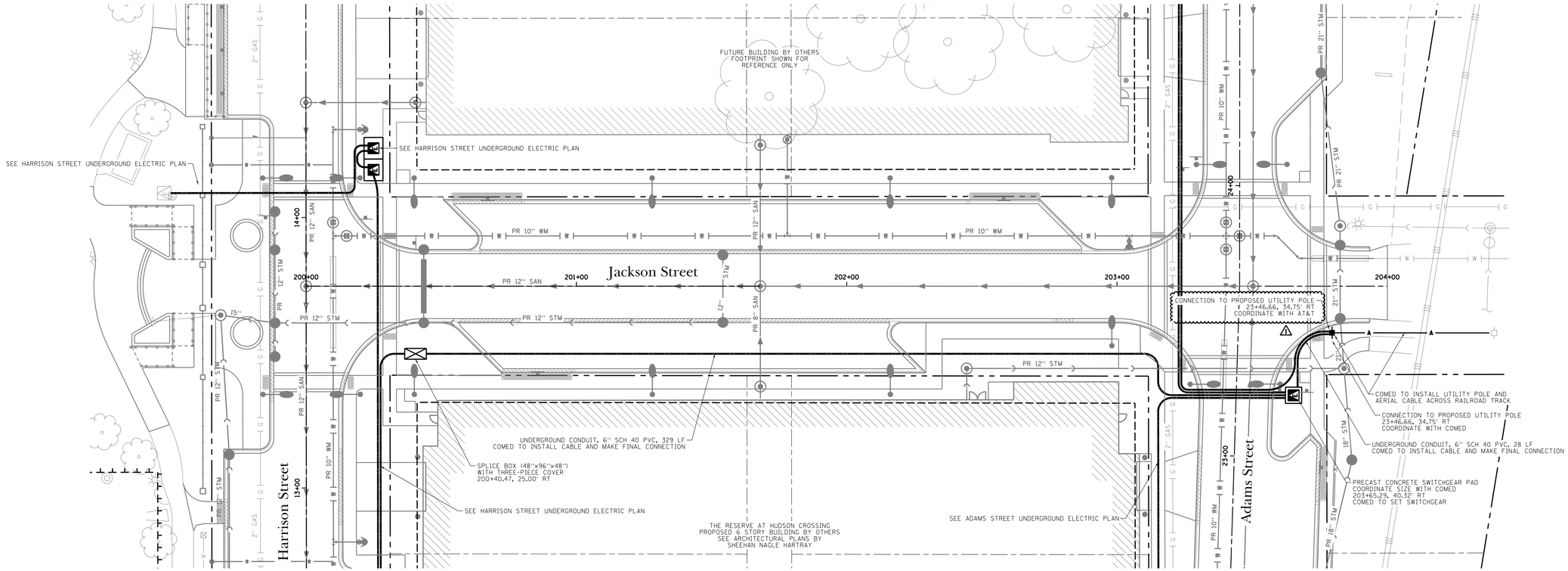

NOTES:

1. ALL ELECTRIC WORK SHALL BE CONSTRUCTED IN ACCORDANCE WITH COMED REQUIREMENTS.
2. RESTORATION OUTSIDE LIMITS OF ROADWAY IMPROVEMENTS SHALL BE INCIDENTAL TO THE CONTRACT.

20 0 20 40
SCALE: 1" = 20' FEET

ISSUE	REVISIONS	DATE
1.	ADDENDUM #1	3/1/19
	ISSUED FOR BIDDING	2/21/19

PROJECT STAFF
PROJECT MANAGER: SCOTT TROTTER, P.E.
ENGINEER: TERRY THEYKAMP, P.E.
ENGINEER:
ENGINEER:
TECHNICIAN: MIKE DAVISON
TECHNICIAN:

TROTTER ASSOCIATES, INC.
ENGINEERS AND SURVEYORS
400 W. Veterans Parkway, Suite D
Yorkville, Illinois 60560
Ph. 630-387-0170 • Fax 630-387-0175

The Reserve at Hudson Crossing - Roadway Improvements

Underground Electric Plan - Jackson Street

Oswego, Kendall County, Illinois

Project No.: SH0002
File Name: 63_ELEC_JACK.dgn
Issue Date: 3/1/2019
Scale: 1" = 20'
Sheet Number
63

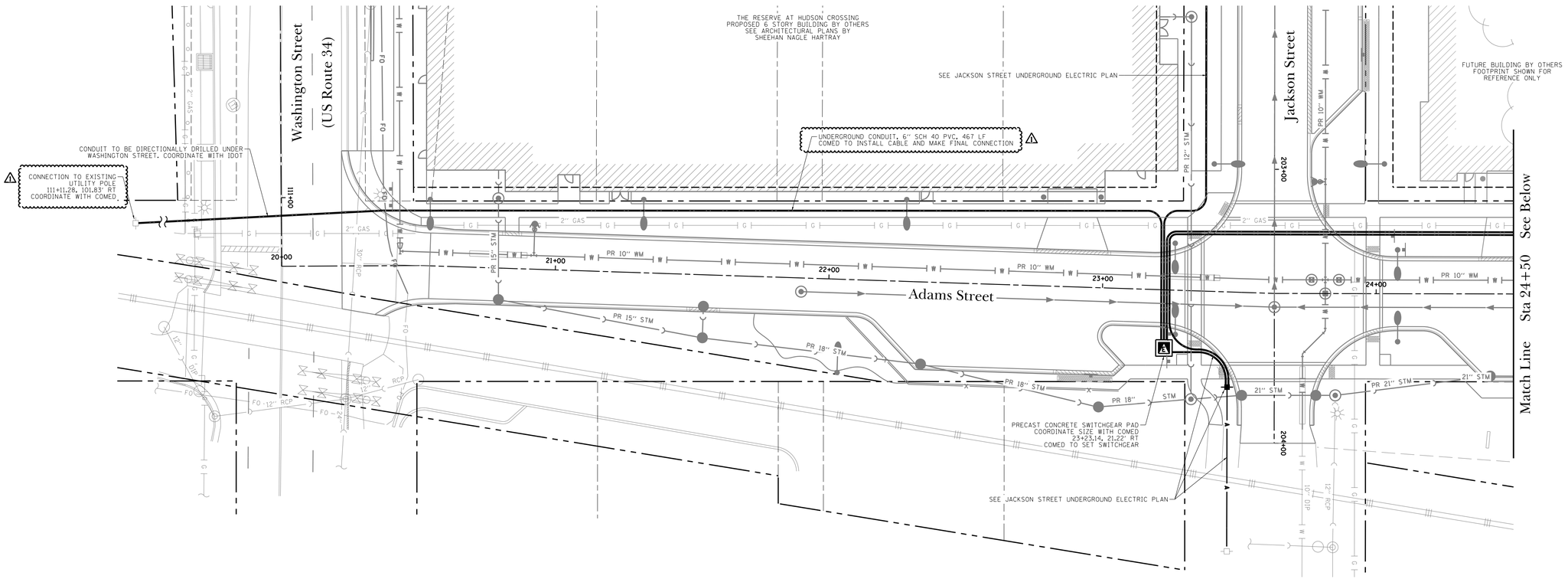

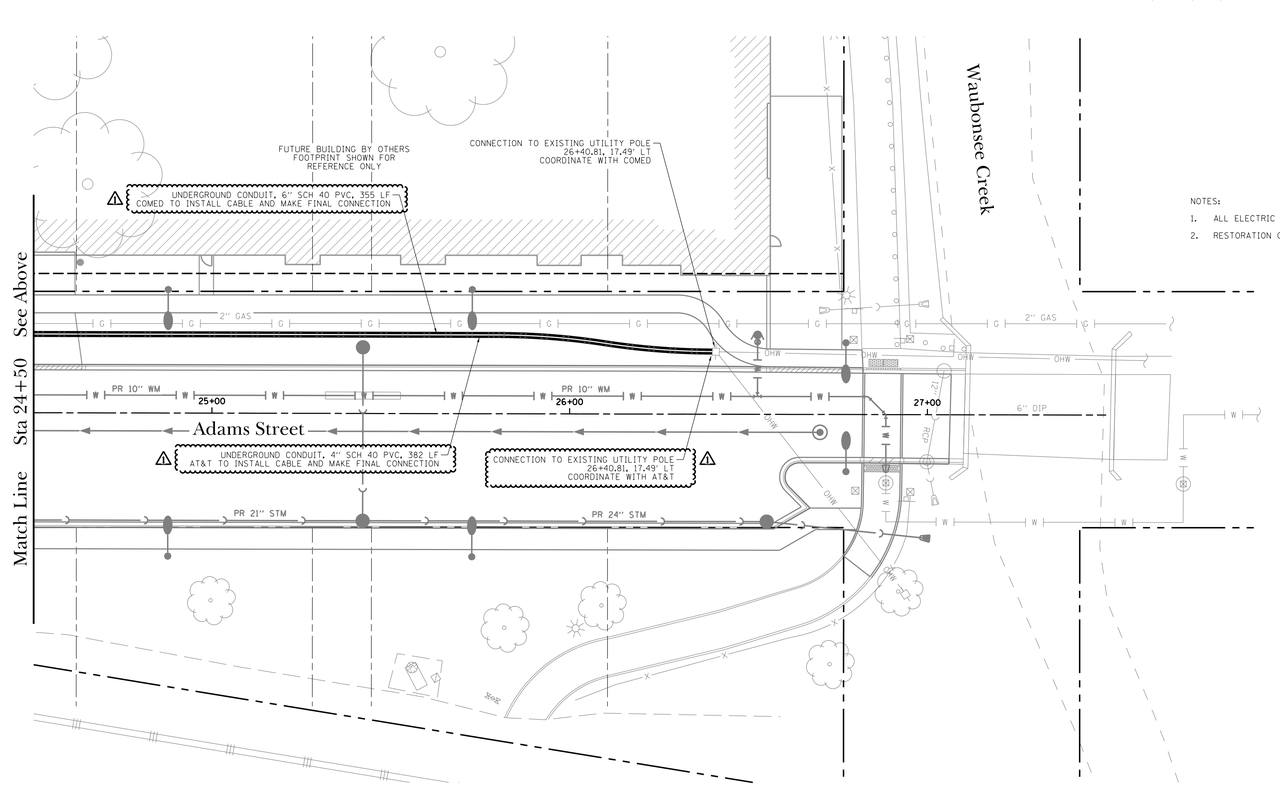

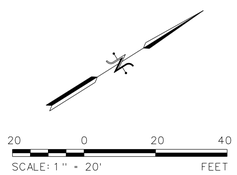

NOTES:

1. ALL ELECTRIC WORK SHALL BE CONSTRUCTED IN ACCORDANCE WITH COMED REQUIREMENTS.
2. RESTORATION OUTSIDE LIMITS OF ROADWAY IMPROVEMENTS SHALL BE INCIDENTAL TO THE CONTRACT.

ISSUE	REVISIONS	DATE
1.	ADDENDUM #1	3/1/19
	ISSUED FOR BIDDING	2/21/19

PROJECT STAFF
PROJECT MANAGER: SCOTT TROTTER, P.E.
ENGINEER: TERRY THEYKAMP, P.E.
ENGINEER:
ENGINEER:
TECHNICIAN: MIKE DAVISON
TECHNICIAN:

TROTTER ASSOCIATES, INC.
ENGINEERS AND SURVEYORS
400/201 Veterans Boulevard, Suite D
Naperville, Illinois 60563
Ph. 630-587-0170 • Fax 630-587-0175

The Reserve at Hudson Crossing - Roadway Improvements

Underground Electric Plan - Adams Street

Oswego, Kendall County, Illinois

Project No.:	SH0002
File Name:	64_ELEC_ADAMS.dgn
Issue Date:	3/1/2019
Scale:	1" = 20'
Sheet Number	64

NOTES

1. PERENNIAL AND ANNUAL SEASONAL COLOR IN PLANTERS BY OSWEGO PARK DISTRCT. RAISED CIRCULAR PLANTER TO BE BUILT AT SEAT WALL HIEGHT AND MATCH WALL STONE ON WASHINGTON STREET
2. RAIN GARDEN AREA 1060 S.F. TOTAL AREA SOIL MIX: 50% TOPSOIL 30% COURSE SAND 20% LEAF MULCH/COMPOST INSTALL 480 PLANT PLUGS (SEE DETAIL SHEET) 18" O.C. EQUAL QUANTITIES IN CLUSTERS OF 5 TO 7 PLANTS
3. FINAL LOCATION OF ALL LANDSCAPE ITEMS TO BE COORDINATED WITH VILLAGE OF OSWEGO. ⚠1

KEY

- BENCH
- PLANTER
- TRASH RECEPTACLE
- RECYCLING RECEPTACLE
- BR BIKE RACK ⚠1
- PA PUBLIC ART (BY OTHERS)

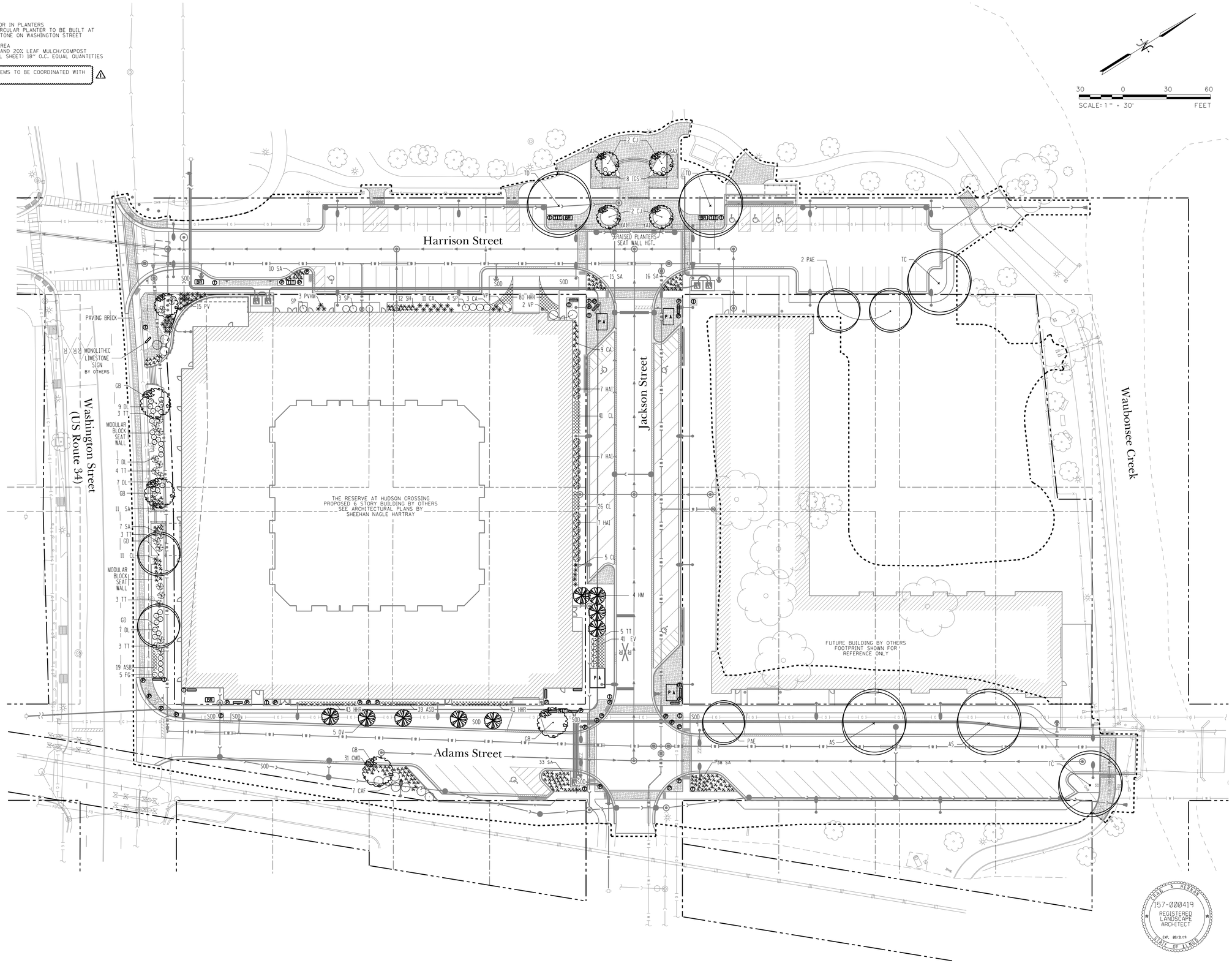

DATE	REVISIONS	ISSUE
3/1/19	ADDENDUM #1	1.
2/21/19	ISSUED FOR BIDDING	

PROJECT STAFF

PROJECT MANAGER:	SCOTT TROTTER, P.E.
ENGINEER:	TERRY HEFFKAMP, P.E.
ENGINEER:	
ENGINEER:	
TECHNICIAN:	MIKE HAYSON
TECHNICIAN:	

TROTTER ASSOCIATES, INC.
ENGINEERS AND SURVEYORS
400-20 N. Orson Rodd, Suite D
Oswego, Illinois 60543
Ph. 630-587-0170 • Fax 630-587-0175

The Reserve at Hudson Crossing - Roadway Improvements

Landscape Plan

Oswego, Kendall County, Illinois

MARK A. HEFFKAMP
157-000419
REGISTERED LANDSCAPE ARCHITECT
EXP. 00/31/19
STATE OF ILLINOIS

Project No.:	SH0002
File Name:	83_LS_PLAN.dgn
Issue Date:	3/1/2019
Scale:	1" = 30'
Sheet Number	83

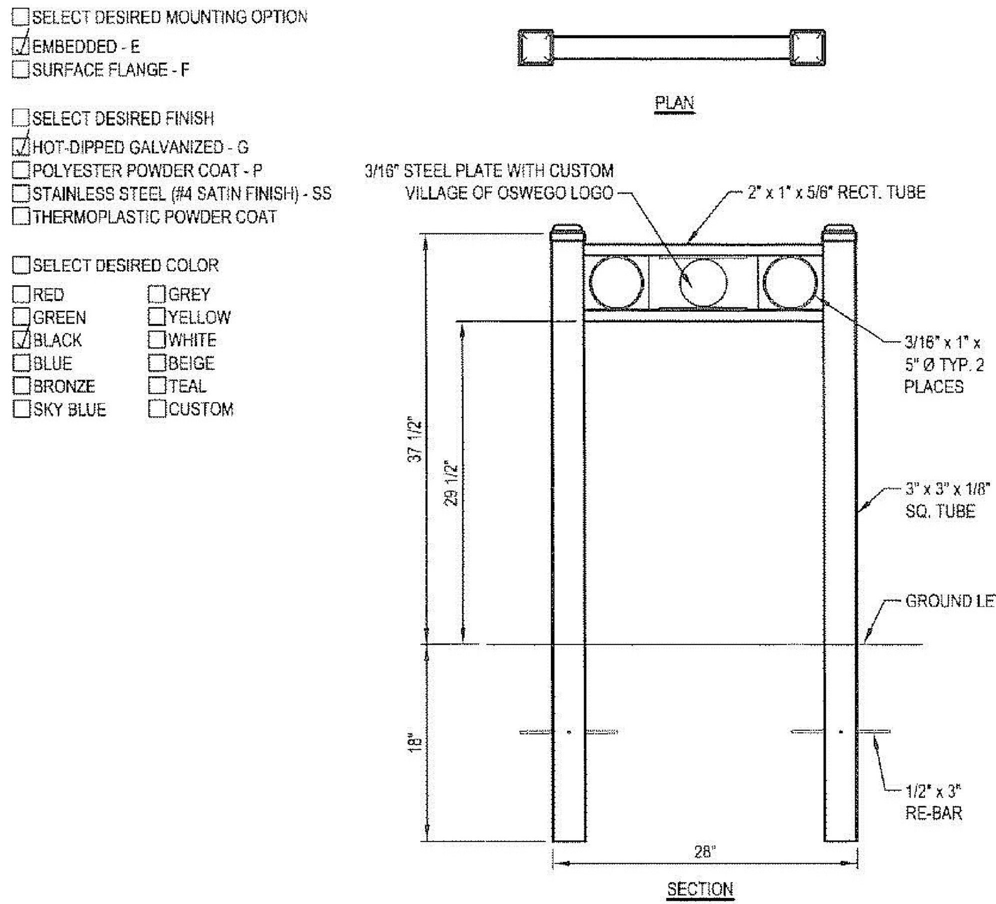

NOTES:
1. INSTALLATION TO BE COMPLETED IN ACCORDANCE WITH MANUFACTURERS SPECIFICATIONS.
2. DO NOT SCALE DRAWINGS.
3. CONTRACTORS NOTE: FOR PRODUCT AND COMPANY INFORMATION, VISIT www.CADdetails.com/info REFERENCE NUMBER 474-026.

(1) BICYCLE RACK DETAIL
NOT TO SCALE

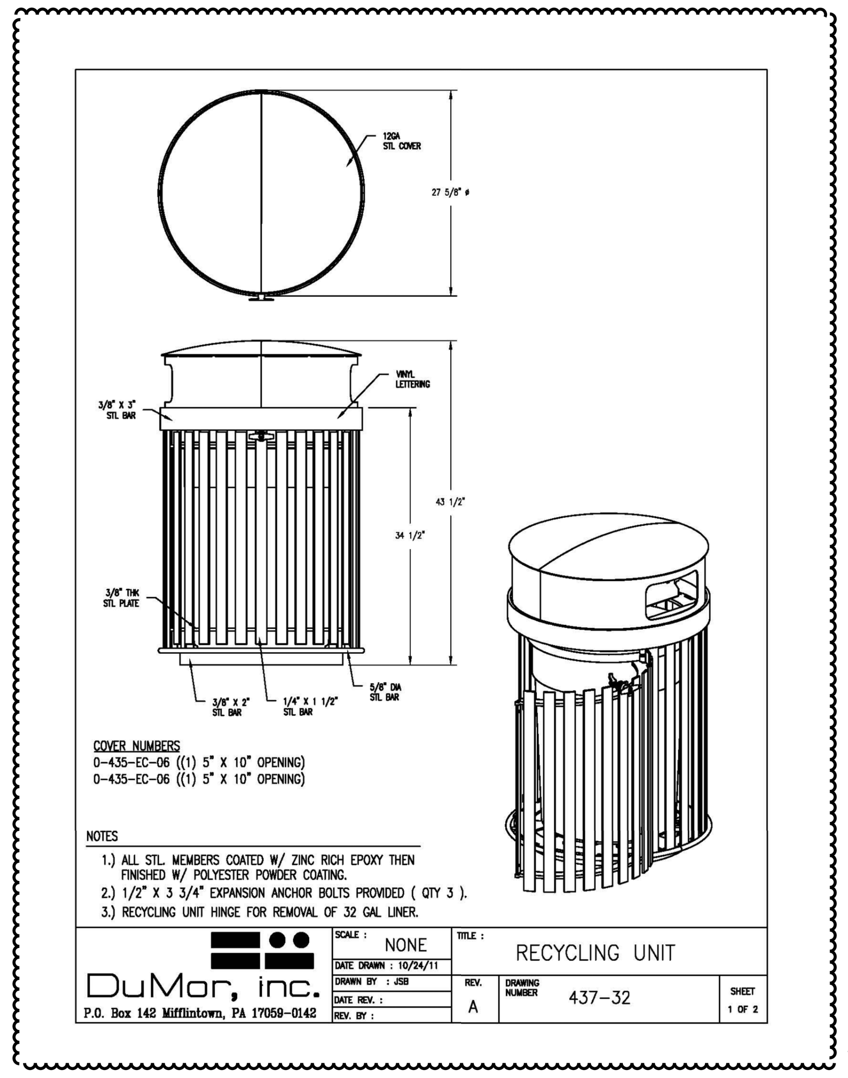

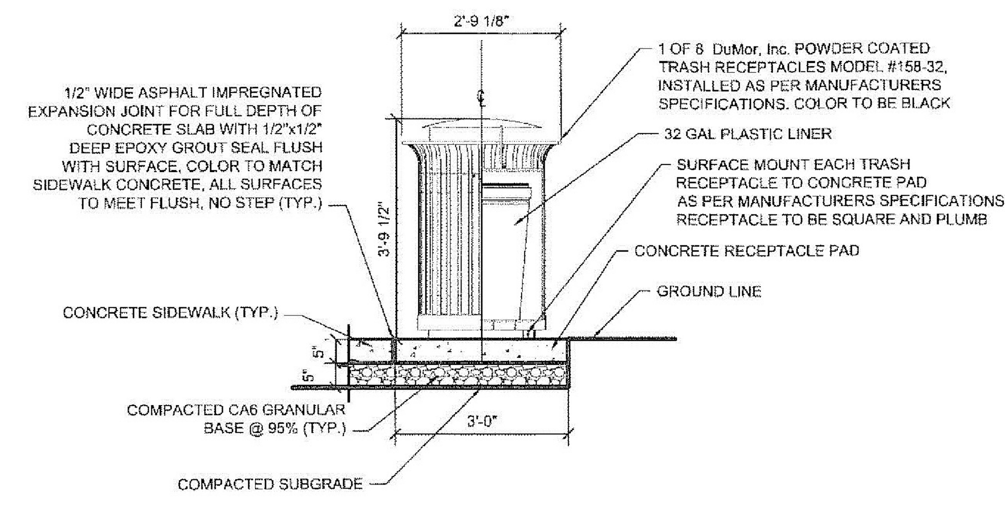

(5) TYPICAL TRASH RECEPTACLE SECTION
1/2" = 1'-0"

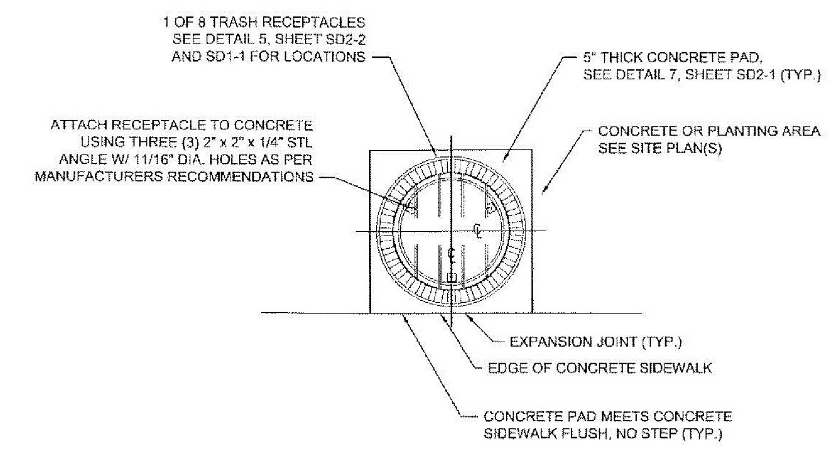

(7) TYPICAL TRASH RECEPTACLE DETAIL PLAN
1/2" = 1'-0"

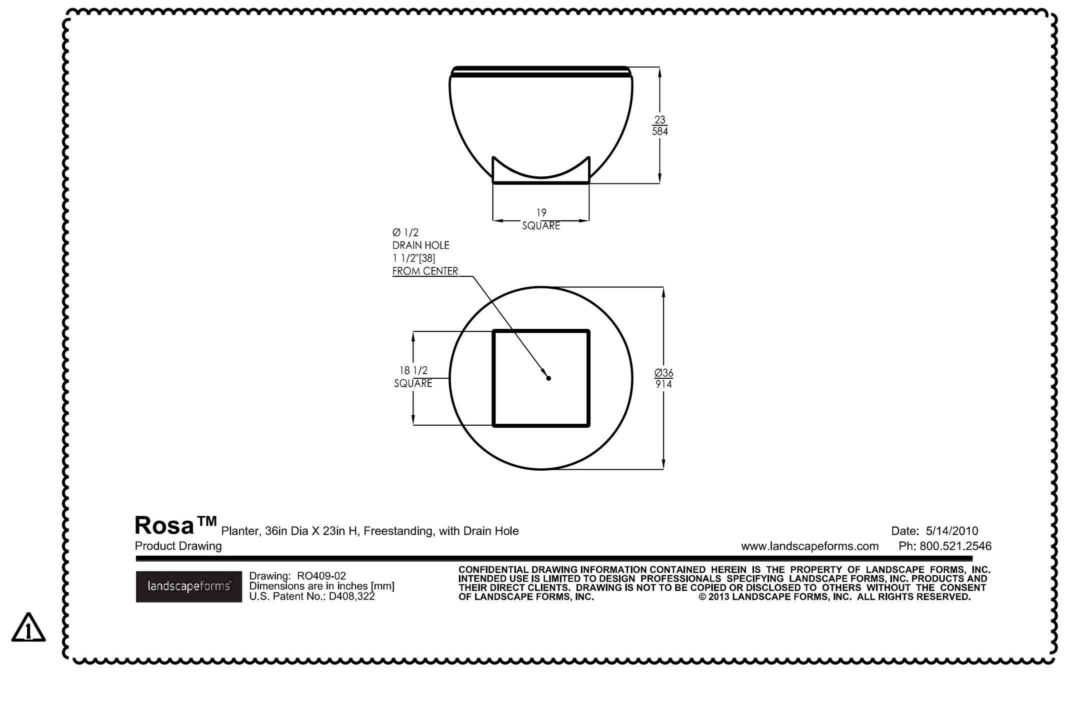

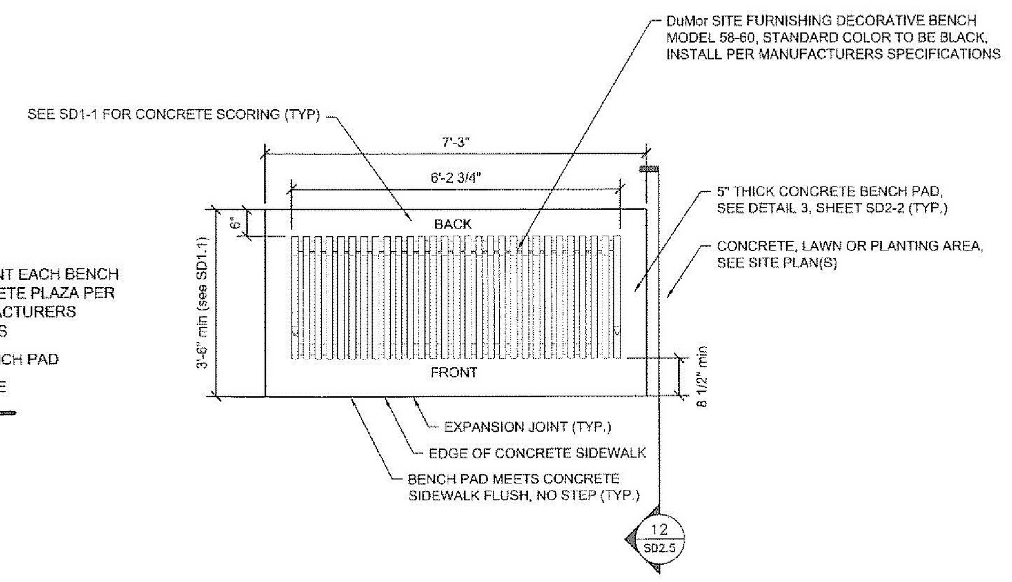

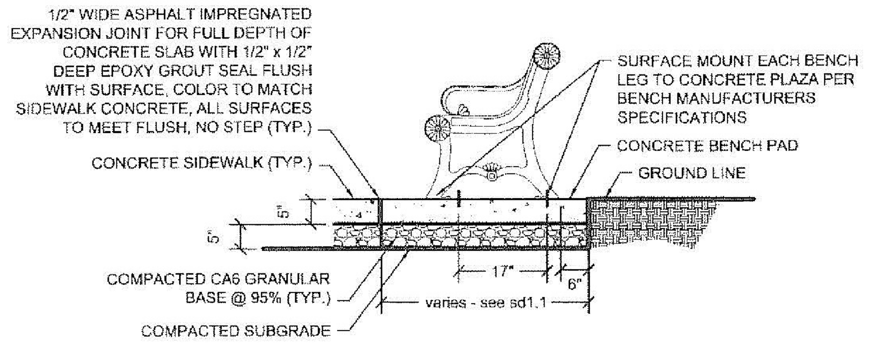

(3) TYPICAL ORNAMENTAL BENCH SECTION
1/2" = 1'-0"

(2) TYPICAL ORNAMENTAL BENCH DETAIL PLAN
1/2" = 1'-0"

GENERAL NOTES

1. ALL PLANT MATERIAL SHALL BE NORTHERN ILLINOIS NURSERY GROWN TO ASSURE CLIMATIC AND SOIL SIMILARITY. ALL MATERIAL SHALL BE BALLED AND BURLAP PER AMERICAN STANDARD FOR NURSERY STOCK BY THE AMERICAN ASSOCIATION OF NURSERYMEN, INC. PERENNIAL AND GROUND COVER SHALL BE CONTAINER GROWN.
2. ALL BEDS SHALL RECEIVE 3-4″ OF FINELY SHREDDED HARDWOOD MULCH GROUND COVER BEDS SHALL BE TREATED WITH TRFLAN PRE-EMERGENT HERBICIDE, ALL OTHER BEDS SHALL RECEIVE RONSTAR 5g OR SIMILAR ALL TREES SHALL RECEIVE PRE-EMERGENT HERBICIDE FOR WEED CONTROL. 6″ OF FINELY SHREDDED HARDWOOD MULCH. ALL LANDSCAPE SPOILS SHALL BE REMOVED FROM THE SITE BY THE CONTRACTOR.
3. OWNER SHALL PROVIDE SUFFICIENT WATER FOR THE CONTRACTOR TO MAINTAIN THE PLANT MATERIAL, SEED AND SOD AREAS. CONTRACTOR SHALL WATER SOD UNTIL THE TURF HAS BECOME ADEQUATELY ESTABLISHED CONTRACTOR SHALL WARRANTEE ALL MATERIAL AND LABOR FOR A PERIOD OF TWO YEARS FROM ACCEPTANCE OF ALL WORK. OWNER TO PROVIDE ALL SUPPLEMENTAL WATERING AND PROPER CARE AND MAINTENANCE OF ALL MATERIAL AFTER CONTRACTOR'S INITIAL CARE
4. QUANTITY LISTS ARE SUPPLIED AS A CONVENIENCE. THE CONTRACTOR SHALL VERIFY ALL QUANTITIES ON-SITE. THE CONTRACTOR SHALL VERIFY LOCATIONS OF ALL UNDERGROUND UTILITIES PRIOR TO DIGGING.
5. PLANTING BEDS SHALL BE ELEVATED SLIGHTLY TO INSURE PROPER DRAINAGE. ALL ROOT BALLS OF TREES SHALL BE ELEVATED ABOVE FINISHED GRADE. ALL GRADING SHALL PROVIDE SLOPES WHICH ARE SMOOTH, CONTINUOUS AND HAVE POSITIVE DRAINAGE IN ALL AREAS.
6. CONTRACTOR SHALL BE RESPONSIBLE FOR PROVIDING TEMPORARY EROSION CONTROL FOR SOIL AREAS DUE TO SLOPE CONDITIONS. CONTRACTOR SHALL MAINTAIN ALL EROSION CONTROL STRUCTURES, FENCES, DITCH CHECKS, AND INLET PROTECTORS UNTIL ADEQUATE VEGETATION HAS BEEN ESTABLISHED
7. EXCAVATED MATERIALS IN EXCESS OR THOSE NOT REQUIRED OR UNSUITABLE FOR RE-USE SHALL BE DISPOSED OF OFF SITE AT CONTRACTORS EXPENSE. CONTRACTOR SHALL REMOVE ALL DEBRIS DAILY AND MAINTAIN THE SITE IN A NEAT AND SAFE CONDITION.
8. SOIL TESTS SHALL BE MADE TO DETERMINE THE EXACT REQUIREMENTS FOR BOTH SOIL AMENDMENTS AND FERTILIZER. SOIL TESTS SHALL BE CONDUCTED BY A GOVERNMENT LABORATORY OR RECOGNIZED COMMERCIAL LABORATORY, COST OF WHICH SHALL BE BORNE BY THE CONTRACTOR. CONTRACTOR IS RESPOSIBLE FOR MATERIAL COST AND APPLICATION OF TESTING LABORATORY'S RECOMMENDATIONS.
9. LANDSCAPE CONTRACTOR SHALL PROVIDE THE OWNER WITH AN EQUIPMENT AND LABOR RATE SCHEDULE. THIS LIST SHALL INCLUDE COST OF TOPSOIL AND LANDSCAPE DEBRIS/SPOILS REMOVAL WITH SQUARE FOOT COST FOR TURF LANDSCAPE CONTRACTOR SHALL RESTORE ALL RESTORATION (SOD AND SEED). TURF AREAS DAMAGED DUE TO CONSTRUCTION ON AND OFF SITE AT THE AGREED RATES TO RESTORE TO EXISTING CONDITIONS.
10. LANDSCAPE CONTRACTOR SHALL FOLLOW ALL LOCAL AND MUNICIPAL CODES AND REQUIREMENTS. CONTRATOR SHALL SECURE ALL REQUIRED PERMITS AS NECESSARY TO COMPLETE THE SCOPE OF THE JOB.

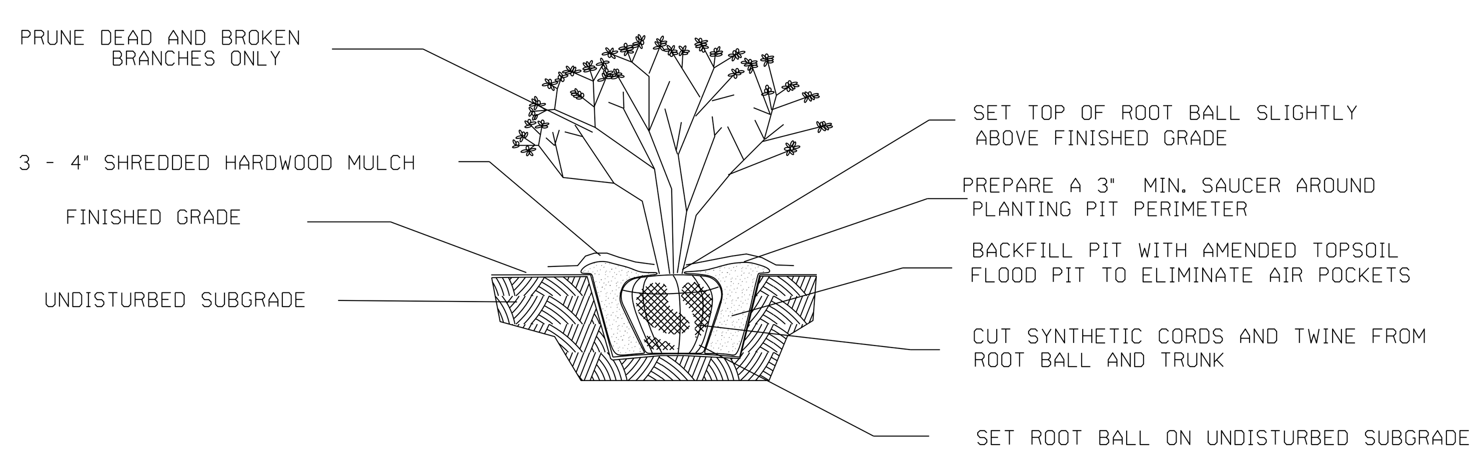

SHRUB PLANTING DETAIL
NOT TO SCALE USE ONLY NORTHERN ILLINOIS GROWN NURSERY STOCK

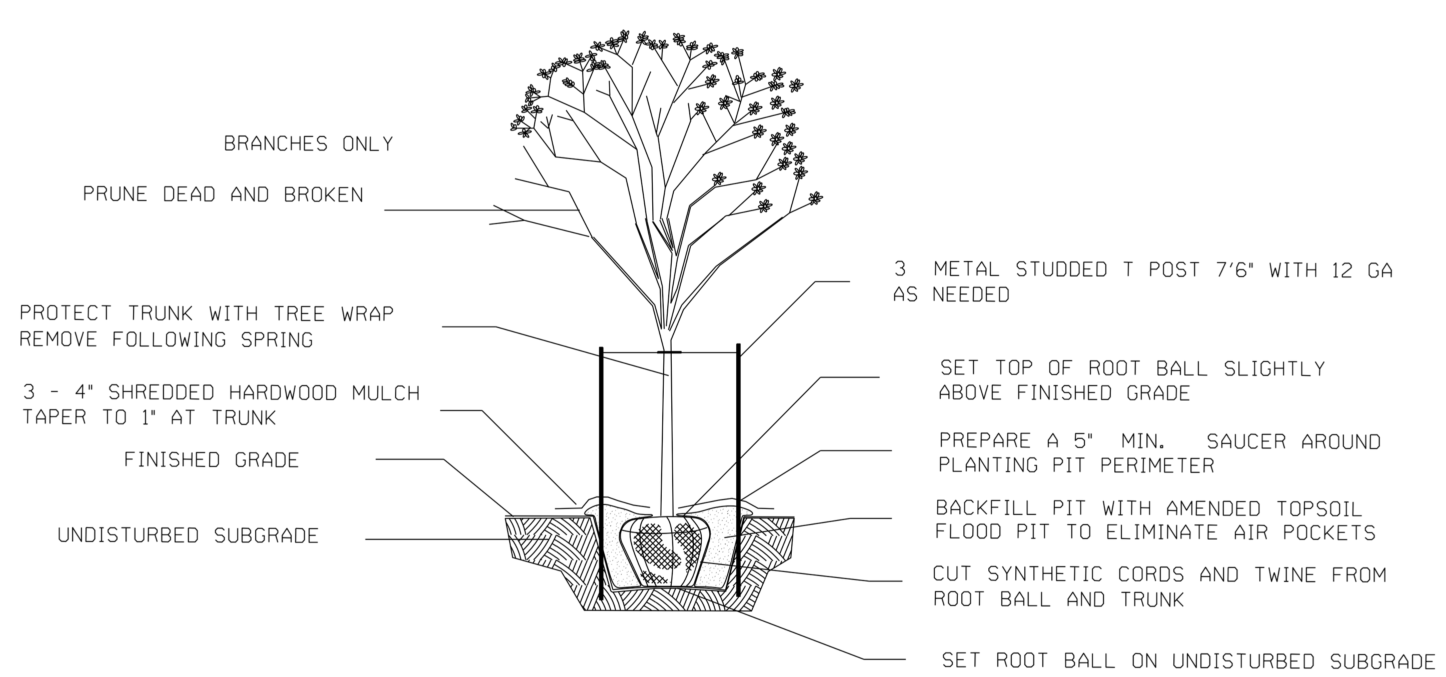

TREE PLANTING DETAIL
NOT TO SCALE USE ONLY NORTHERN ILLINOIS GROWN NURSERY STOCK

Trash Receptacle

ALIGNMENT	STATION	OFFSET	QUANTITY (EACH)
HARRISON STREET	10+87	23′ RT	1
HARRISON STREET	13+17	22′ LT	1
HARRISON STREET	13+30	38′ RT	1
HARRISON STREET	13+43	45′ RT	1
HARRISON STREET	14+15	36′ RT	1
HARRISON STREET	14+34	22′ LT	1
ADAMS STREET	20+41	41′ LT	1
ADAMS STREET	20+53	33′ LT	1
ADAMS STREET	20+79	17′ LT	1
ADAMS STREET	21+10	27′ LT	1
ADAMS STREET	23+30	25′ RT	1
ADAMS STREET	23+45	38′ LT	1
ADAMS STREET	23+94	47′ LT	1
ADAMS STREET	23+94	26′ LT	1
ADAMS STREET	24+03	24′ RT	1
		TOTAL	15

Recycling Receptacle

ALIGNMENT	STATION	OFFSET	QUANTITY (EACH)
HARRISON STREET	11+39	23′ RT	1
HARRISON STREET	13+22	22′ LT	1
HARRISON STREET	14+29	22′ LT	1
ADAMS STREET	23+13	28′ LT	1
		TOTAL	4

Planter

ALIGNMENT	STATION	OFFSET	QUANTITY (EACH)
HARRISON STREET	11+33	23′ RT	1
HARRISON STREET	11+45	23′ RT	1
HARRISON STREET	11+50	15′ RT	1
HARRISON STREET	13+44	36′ RT	1
HARRISON STREET	13+44	39′ RT	1
HARRISON STREET	13+47	36′ RT	1
HARRISON STREET	14+05	46′ RT	1
HARRISON STREET	14+05	36′ RT	1
ADAMS STREET	20+27	40′ LT	1
ADAMS STREET	20+31	29′ LT	1
ADAMS STREET	20+39	29′ LT	1
ADAMS STREET	20+49	17′ LT	1
ADAMS STREET	20+83	26′ LT	1
ADAMS STREET	20+97	26′ LT	1
ADAMS STREET	21+16	27′ LT	1
ADAMS STREET	21+74	27′ LT	1
ADAMS STREET	21+80	29′ LT	1
ADAMS STREET	21+86	29′ LT	1
ADAMS STREET	23+02	33′ LT	1
ADAMS STREET	23+26	28′ LT	1
ADAMS STREET	23+29	17′ LT	1
ADAMS STREET	23+85	26′ LT	1
ADAMS STREET	23+87	24′ RT	1
ADAMS STREET	23+89	22′ LT	1
ADAMS STREET	23+94	19′ RT	1
ADAMS STREET	23+94	18′ LT	1
ADAMS STREET	23+94	37′ LT	1
		TOTAL	27

Bench

ALIGNMENT	STATION	OFFSET	QUANTITY (EACH)
HARRISON STREET	13+33	35′ RT	1
HARRISON STREET	13+48	40′ RT	1
HARRISON STREET	14+05	41′ RT	1
ADAMS STREET	20+36	41′ LT	1
ADAMS STREET	20+59	34′ LT	1
ADAMS STREET	20+91	26′ LT	1
ADAMS STREET	23+01	39′ LT	1
ADAMS STREET	23+06	27′ LT	1
ADAMS STREET	23+20	28′ LT	1
ADAMS STREET	23+23	42′ LT	1
ADAMS STREET	23+37	22′ LT	1
ADAMS STREET	23+40	25′ LT	1
ADAMS STREET	23+40	23′ RT	1
ADAMS STREET	23+45	35′ LT	1
ADAMS STREET	23+91	34′ LT	1
ADAMS STREET	23+95	42′ LT	1
		TOTAL	16

Bike Rack

ALIGNMENT	STATION	OFFSET	QUANTITY (EACH)
HARRISON STREET	10+76	22′ RT	1
HARRISON STREET	13+29	22′ LT	1
HARRISON STREET	14+22	22′ LT	1
ADAMS STREET	20+70	28′ LT	1
		TOTAL	4

Plant List

KEY	NAME BOTANICAL/COMMON	SIZE	QUANTITY
AS	ACER SACCHARUM 'CRESCENDO' CRESCENDO SUGAR MAPLE	3"	2
GB	GINKGO BILOBA 'AUTUMN GOLD' AUTUMN GOLD GINKGO	3"	4
GD	GYMNOCLADUS DIOICUS 'ESPRESSO' ESPRESSO KENTUCKY COFFEE TREE	4"	2
PAE	PLATANUS ACERIFOLIA 'MORTON' CIRCLE' EXCAMATION LONDON PLANETREE	3"	3
TC	TILIA CORDATA 'GREENSPIRE' GREENSPIRE LINDEN	3"	2
TD	TAXODIUM DISTICHUM BALD CYPRESS	4"	2
HM	HEPTACODIUM MICNOIDES SEVEN SON FLOWER	8′	4
CJ	CERCIDIPHYLLUM JAPONICA KATSURA TREE	3"	4
OV	OSTRYA VIRGINIANA AMERICAN HOPHORNBEAM	3"	5
IGS	ILEX GLABRA 'SHAMROCK' SHAMROCK INKBERRY	18"	8
TT	TAXUS X MEDIA 'TAUNTONII' TAUNTON YEW	24"	21
CAF	CORNUS STOLONIFERA 'ARTIC FIRE' ARTIC FIRE DOGWOOD	7 GAL	7
DL	DIERVILLA LONICERA DWARF BUSH HONEYSUCKLE	5 GAL	30
FG	FOTHERGILLA GARDENII DWARF FOTHERGILLA	3 GAL	5
HAI	HYDRANGEA ARBORESCENS 'INCREDIBALL INCREDIBALL HYDRANGEA	5 GAL	21
SP	SYRINGA PATULA 'MISS KIM' MISS KIM LILAC	36"	7
VP	VIBURNUM PRUNIFOLIA BLACKHAW VIBURNUM	5′	3
VD	VIBURNUM DENTATUM ARROWWOOD VIBURNUM	4′	15
ASB	ALLIUM 'SUMMER BEAUTY' SUMMER BEAUTY ONION	1 GAL	51
CA	CALAMAGROSTIS X ACUTIFLORA 'KARL FOERSTER' FEATHER REED GRASS	3 GAL	6
CL	CHASMANTHIUM LATIFOLIUM NORTHERN SEA OATS	1 GAL	83
CMO	CAREX MUSKINGUMENSIS 'OEHME' OEHME PALM SEDGE	1 GAL	31
HHR	HEMEROCALIS 'HAPPY RETURNS' HAPPY RETURNS DAYLILY	1 GAL	166
PVHM	PANICUM VIRGATUM 'HEAVY METAL HEAVY METAL SWITCH GRASS	3 GL	18
SA	SESLERIA AUTUMNALIS AUTUMN MORE GRASS	1 GAL	128
SH	SPOROBOLUS HETEROLEPIS PRAIRIE DROPSEED	1 GAL	12

ISSUE	REVISIONS	DATE
1.	ADDENDUM #1	3/1/19
	ISSUED FOR BIDDING	2/21/19

PROJECT STAFF
PROJECT MANAGER: SCOTT TROTTER, P.E.
ENGINEER: TERRY HEITKAMP, P.E.
ENGINEER:
ENGINEER:
TECHNICIAN: MIKE DAVISON
TECHNICIAN:

TROTTER and ASSOCIATES, INC.
ENGINEERS AND SURVEYORS
40W201 Wasco Road, Suite D
St. Charles, Il. 60175
Ph.: 630-587-0470 • Fax: 630-587-0475

The Reserve at Hudson Crossing - Roadway Improvements
Landscape Details, Notes and Plant List
Oswego, Kendall County, Illinois

Project No.: SH0002
File Name: 84_LS_DETAILS.dgn
Issue Date: 3/1/2019
Scale: N.T.S.
Sheet Number
84

THRUST BLOCK INSTALLATION DETAIL

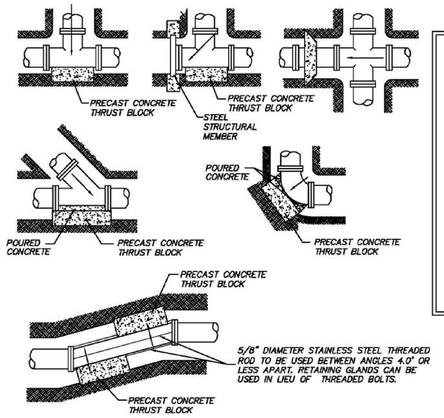

BEARING AREA (SQ. FT.)

PIPE SIZE	TEE/PLUG	90°	45°	22-1/2°	11-1/4°
6	4	2	1	1	1
8	6	4	3	1	1
10	7	5	3	2	1
12	8	6	4	3	2
14	12	9	6	4	3
16	15	12	7	5	3
18	18	15	9	5	4
24	40	30	15	10	5

ALL BLOCKING SHALL BE 12" PRE-CAST CONCRETE BLOCK AGAINST UNDISTURBED EARTH.

ALL BENDS OR ELBOWS GREATER THAN AND INCLUDING 11-1/4" SHALL HAVE THRUST BLOCKING.

REVISIONS

INITIAL	DATE
JPH	MARCH 2007

OSW-W-2

CURB BOX INSTALLATION DETAIL

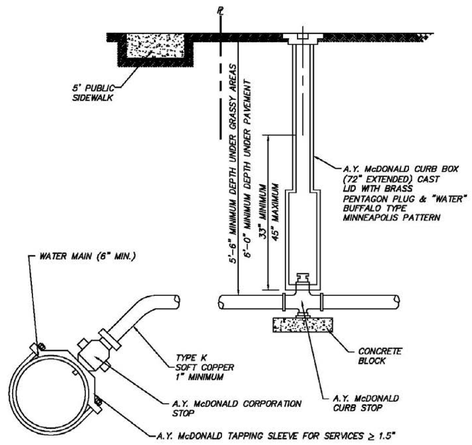

NOTES:

1. NO CORPORATION STOPS, SERVICE COPPERS, OR CURB BOXES MAY BE LOCATED UNDER PAVED AREAS INCLUDING DRIVES AND SIDEWALKS.
2. ALL WATER MAIN HARDWARE SHALL BE A.Y. McDONALD.
3. SERVICE TO BE CONTINUOUS WITHOUT JOINTS FROM CORPORATION STOP TO CURB STOP.
4. MULTIPLE TAPS INTO MAIN SHALL BE NO CLOSER THAN 2' APART.
5. TRENCH FROM MAIN TO BACK OF SIDEWALK TO BE COMPACTED TRENCH BACKFILL CA-6.

REVISIONS

INITIAL	DATE
JPH	MARCH 2007

OSW-W-3

FIRE HYDRANT INSTALLATION DETAIL

CLOW MEDALLION TYPE HYDRANT (5-1/4" BARREL)

WATEROUS PACER WB-67-250 FIRE HYDRANT (5-1/4" BARREL)

ALL AMERICAN FLOW CONTROL VALVES & HARDWARE AUXILLARY VALVE 6' GATE VALVE NO. A-2370-20 MODIFIED WEDGE RESILIENT SEAT

USE WATEROUS PACER WB-67-250 HYDRANT 6" TRENCH DEPTH, 6" MJ SHOE, 1-1/2" PENTAGON OPERATING NUT, OPEN LEFT, NATIONAL STANDARD NOZZLES, PAINTED RED

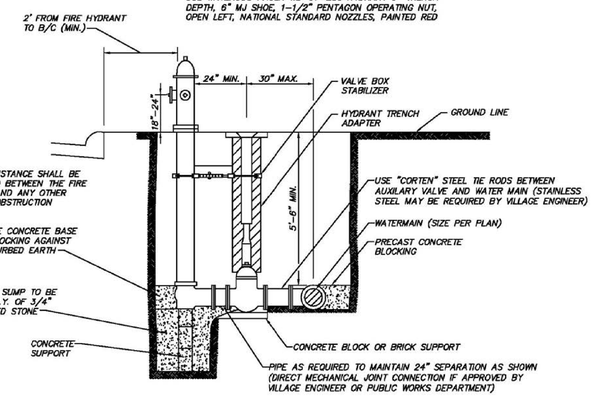

NOTE:

48" MIN. DISTANCE SHALL BE MAINTAINED BETWEEN THE FIRE HYDRANT AND ANY OTHER VERTICAL OBSTRUCTION

NOTE:

FIRE HYDRANTS SHALL BE PLACED APPROXIMATELY 300 FEET APART. LOCATION OF HYDRANTS MUST BE APPROVED BY VILLAGE ENGINEER OR PUBLIC WORKS DEPARTMENT.

REVISIONS

INITIAL	DATE
JPH	MARCH 2007

OSW-W-5

WATER MAIN LOWERING DETAIL

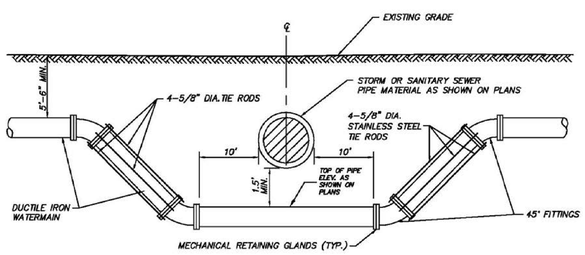

REVISIONS

INITIAL	DATE
JPH	MARCH 2007

NOTE ; VILLAGE APPROVED MECHANICAL RETAINING GLANDS CAN BE USED IN-LIEU OF STAINLESS STEEL TIE RODS. NO HYDRANTS OR VALVE VAULTS CAN BE LOCATED WITHIN DEPRESSED SECTION OF WATERMAIN.

OSW-W-6

STANDARD VALVE VAULT DETAIL

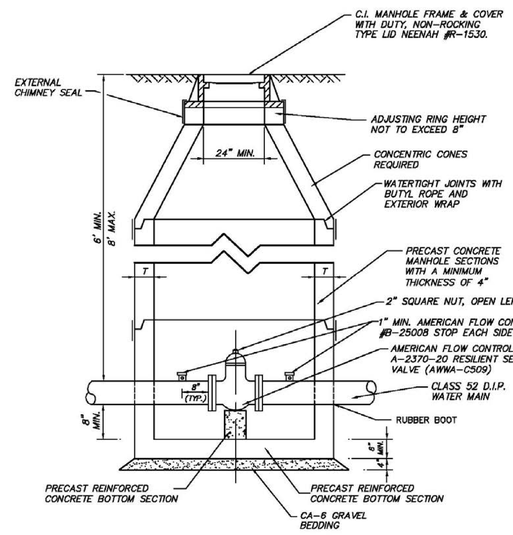

NOTES:

1. DRAIN FOR VALVE VAULT SHALL BE CONSTRUCTED ONLY WHEN SHOWN ON PLANS.
2. FOR PRESSURE CONNECTION SEE SEPARATE DETAIL.

DIAMETER OF WATER MAIN	D	T
8 INCHES AND UNDER	4'-0"	4"
10 INCHES AND OVER	5'-0"	5"

REVISIONS

INITIAL	DATE
JPH	MARCH 2007

OSW-W-8

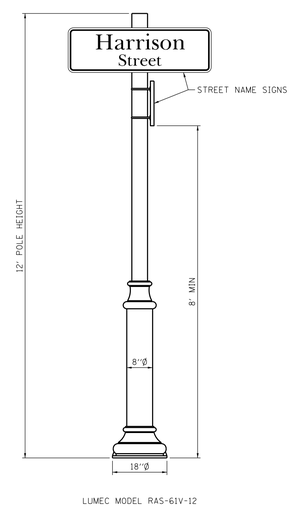

⚠ Decorative Pole and Sign

ISSUE	REVISIONS	DATE
1.	ADDENDUM #1	3/1/19
	ISSUED FOR BIDDING	2/21/19

PROJECT STAFF

PROJECT MANAGER:	SCOTT TROTTER, P.E.
ENGINEER:	TERRY THEYKAMP, P.E.
ENGINEER:	
ENGINEER:	
TECHNICIAN:	MIKE DAVISON
TECHNICIAN:	

TROTTER ASSOCIATES, INC.
ENGINEERS AND SURVEYORS
409/201 Veterans Roadd, Suite D
Bloomingdale, Illinois 60108
Ph: 630-587-0170 • Fax: 630-587-0175

The Reserve at Hudson Crossing - Roadway Improvements

Village of Oswego Standard Details

Oswego, Kendall County, Illinois

Project No.: SH0002

File Name:

Issue Date: 3/1/2019

Scale:

Sheet Number

88

60" DIAMETER - 1500 GALLON GREASE INTERCEPTOR

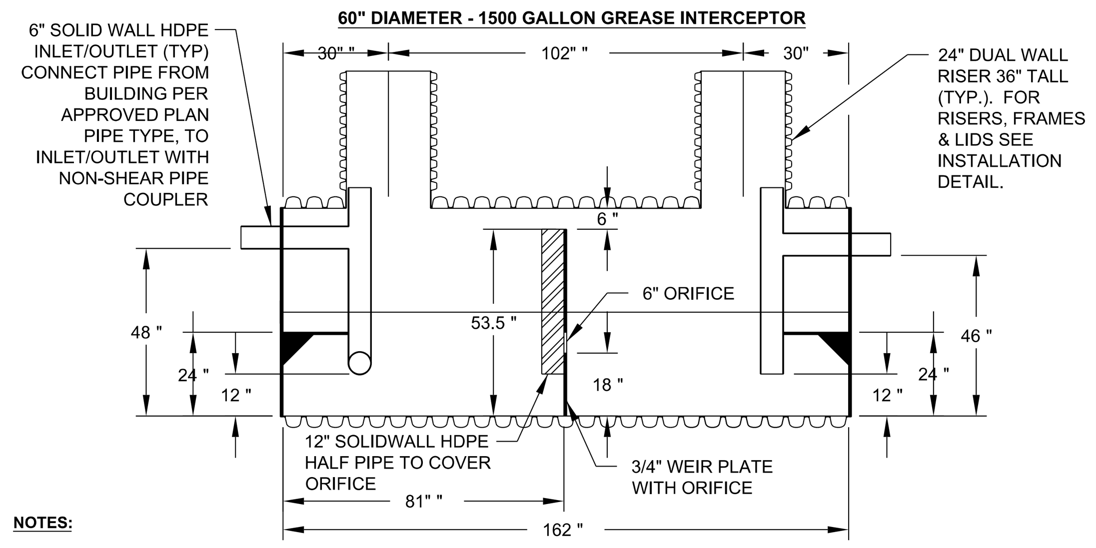

NOTES:

1. FOR GRAVITY FLOW APPLICATIONS ONLY.
2. ALL ADS GREASE INTERCEPTOR UNITS ARE TO BE INSTALLED PER THE MANUFACTURERS' INSTALLATION INSTRUCTIONS
3. MANUFACTURER'S INSTALLATION INSTRUCTIONS PROVIDE AN H-25 TRAFFIC RATING. CONTACT MANUFACTURE'S REPRESENTATIVE FOR OTHER LOADING CONDITIONS.
4. INLETS AND OUTLETS SHALL BE EITHER 4" OR 6". REFER TO THE APPROVED PLANS FOR THE SIZING OF THE DOWNSTREAM SEWER SERVICE (4" OR 6"). CONTACT MANUFACTURERS' REPRESENTATIVE FOR CUSTOM APPLICATIONS.
5. PER FOX METRO REQUIREMENTS A MINIMUM OF 3.5' OF COVER AND A MINIMUM OF 1.00% SLOPE IS REQUIRED FOR ALL EXTERIOR SANITARY PIPING
6. ADDITIONAL PIPE CAN BE ORDERED TO EXTEND RISERS, WHICH CAN BE FIELD CUT TO FINAL GRADE IN FIELD.
7. INLINE DRAINS SHOWN ON INSTALLATION INSTRUCTIONS WILL PROVIDE H-25 TRAFFIC RATING WHEN INSTALLED WITH AN H-25 TRAFFIC RATED LOAD BEARING CONCRETE COLLAR. SEE INSTALLATION INSTRUCTIONS.
8. CUSTOM SIZES AVAILABLE. CONTACT LOCAL ADS REPRESENTATIVE.
9. PROUDLY MADE IN MENDOTA, ILLINOIS.
10. CONTACT CUSTOMER SERVICE AT 1-800-733-4110 FOR PRICING AND DELIVERY INFORMATION.
11. NO VENTS ARE REQUIRED TO BE INSTALLED IN FOX METRO'S SERVICE AREA.

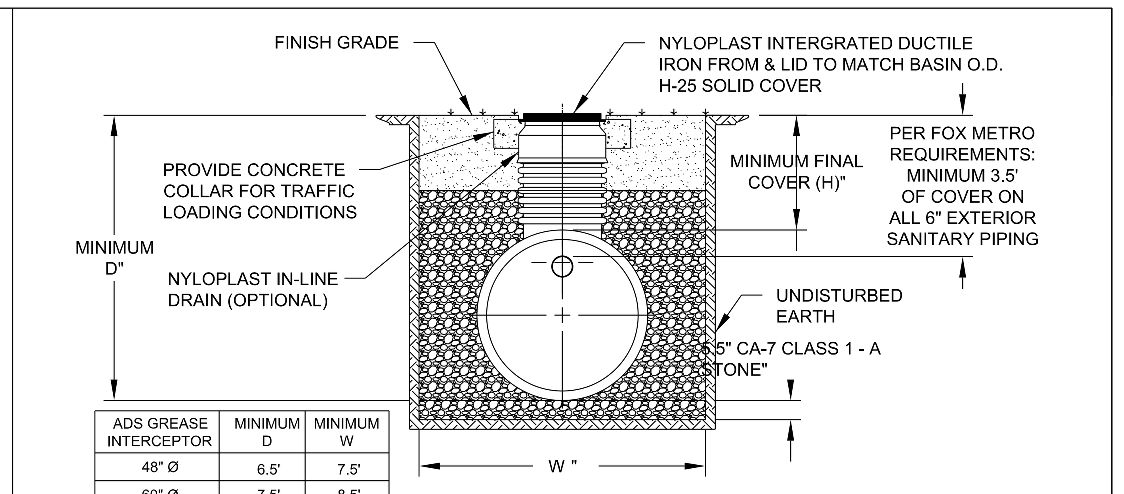

ADS GREASE INTERCEPTOR	MINIMUM D	MINIMUM W
48" Ø	6.5'	7.5'
60" Ø	7.5'	8.5'

NOTES:

1. PLEASE FOLLOW THE INSTALLATION GUIDELINES AS FOUND IN THE INSTALLATION SECTION OF THE ADS DRAINAGE HANDBOOK, AND ASTM D 2321.
2. AVOID EXCESSIVE GROUND WATER IN THE TRENCH, DE-WATER AS NECESSARY. APPROPRIATE MEASURES SHALL BE TAKEN TO PREVENT MIGRATION OF FINES, SEE ASTM D2321.
3. PROVIDE SHEETING OR SHORING AS REQUIRED.
4. UTILIZE CARE WHEN LOWERING UNIT INTO THE TRENCH. HANDLE USING NYLON SLINGS AND TWO PICK POINTS. DO NOT USE SLING AROUND RISERS.
5. PLACE CA-7 CLASS I -A STONE BACKFILL AROUND THE UNIT IN UNIFORM 8"-12" LIFTS, AND COMPACTED TO 90% SPD. CONTINUE BACKFILL WITH AASHTO NO. 57 OR NO. 8 STONE TO 12" ABOVE GREASE INTERCEPTOR.
6. FILL UNIT WITH WATER TO THE INVERT OF THE OUTLET PIPE ONCE BACKFILL IS PLACED AND COMPACTED 12" ABOVE THE UNIT.
7. FOR NON-TRAFFIC LOADING: H = 12" COVER FOR ALL UNITS MEASURED FROM THE TOP OF THE PIPE TO GROUND SURFACE. FOR TRAFFIC LOADING CONDITIONS: H = 24" COVER FOR ALL UNITS MEASURED FROM THE TOP OF THE PIPE TO THE BOTTOM OF BITUMINOUS PAVEMENT OR TOP OF RIGID PAVEMENT. FOR TRAFFIC LOADING ALL INSPECTION RISERS SHALL HAVE A TRAFFIC RATED FRAME AND LID WITH A TRAFFIC RATED LOAD BEARING CONCRETE COLLAR. MAXIMUM COVER HEIGHT MEASURED FROM THE TOP OF THE UNIT TO FINAL GRADE SHALL NOT EXCEED 8 FEET.
8. ALL RISER EXTENSIONS TO GRADE SHOULD BE COORIDNATED THROUGH YOUR LOCAL ADS REPRESENTATIVE.

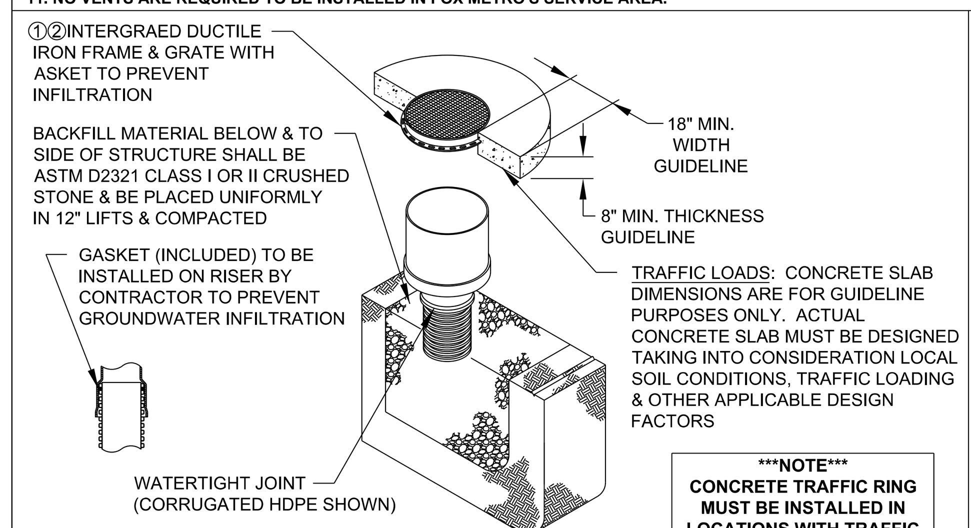

NOTE
CONCRETE TRAFFIC RING MUST BE INSTALLED IN LOCATIONS WITH TRAFFIC LOADING

NOTES:

1. GRATES/SOLID COVERS SHALL BE DUCTILE IRON PER ASTM A536 GRADE 70-50-05.
2. FRAMES SHALL BE DUCTILE IRON PER ASTM A536 GRADE 70-50-05
3. DRAINAGE CONNECTION STUB JOINT TIGHTNESS SHALL CONFORM TO ASTM D3212 FOR CORRUGATED HDPE (ADS & HANCOR DUAL WALL) & SDR 35 PVC.
4. FOR COMPLETE DESIGN AND PRODUCT INFORMATION: WWW.NYLOPLAST-US.COM.
5. TO ORDER CALL: 800-821-6710

© 2007 ADS, INC.

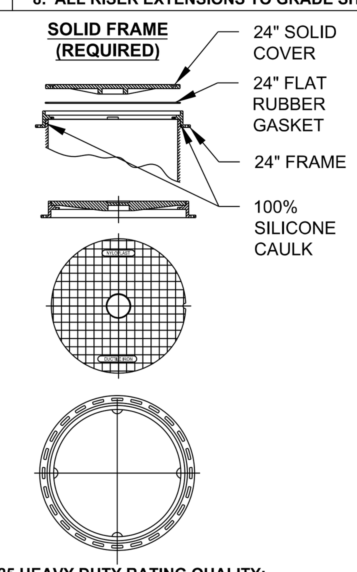

COVER HAS H-25 HEAVY DUTY RATING QUALITY: MATERIALS SHALL CONFORM TO ASTM 536 GRADE 70-50-05.
PAINT: CASTINGS ARE FURNISHED WITH A BLACK PAINT
LOCKING DEVICE AVAILABLE UPON REQUEST
SEE DRAWING NO. 7001-110-025

RISER EXTENSION

TYPICALY REQUIRED WHEN DISTANCE FROM FINISHEDGRADE TO INVERT OF SEWER LATERAL IS GREATER THAN 4 FEET

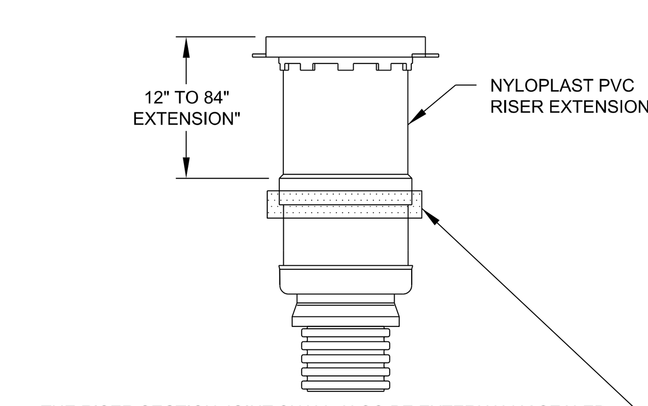

THE RISER SECTION JOINT SHALL ALSO BE EXTERNALLY SEALED WITH A *6" OR **9" WIDE (MIN.) SEALING BAND OF RUBBER AND MASTIC. THE BAND SHALL HAVE AN OUTER LAYER OF RUBBER OR POLYETHLENE WITH AN UNDER LAYER OF RUBBERIZED MASTIC (WITH A PROTECTIVE FILM), MEETING THE REQUIREMENTS OF ASTM C-87 **TYPE II OR *TYPE III.

REV.	DESCRIPTION	BY	MM/DD/YY	CHK'D
7	REVISED GENERAL NOTES	TJR	8/25/14	

ADVANCED DRAINAGE SYSTEMS, INC. ("ADS") HAS PREPARED THIS DETAIL BASED ON INFORMATION PROVIDED TO ADS. THIS DRAWING IS INTENDED TO DEPICT THE COMPONENTS AS REQUESTED. ADS HAS NOT PERFORMED ANY ENGINEERING OR DESIGN SERVICES FOR THIS PROJECT, NOR HAS ADS INDEPENDENTLY VERIFIED THE INFORMATION SUPPLIED. THE INSTALLATION DETAILS PROVIDED HEREIN ARE GENERAL RECOMMENDATIONS AND ARE NOT SPECIFIC FOR THIS PROJECT. THE DESIGN ENGINEER SHALL REVIEW THESE DETAILS PRIOR TO CONSTRUCTION. IT IS THE DESIGN ENGINEERS RESPONSIBILITY TO ENSURE THE DETAILS PROVIDED HEREIN MEETS OR EXCEEDS THE APPLICABLE NATIONAL, STATE, OR LOCAL REQUIREMENTS AND TO ENSURE THAT THE DETAILS PROVIDED HEREIN ARE ACCEPTABLE FOR THIS PROJECT.

1500 GAL GREASE INTERCEPTOR
FOX METRO, IL

DRAWING NUMBER:

ADVANCED DRAINAGE SYSTEMS, INC.
4640 TRUEMAN BLVD
HILLIARD, OHIO 43026

DRAWN BY: CKS
DATE: 08/13/08
CK'D BY:
SCALE: NTS
SHEET 1 OF 1

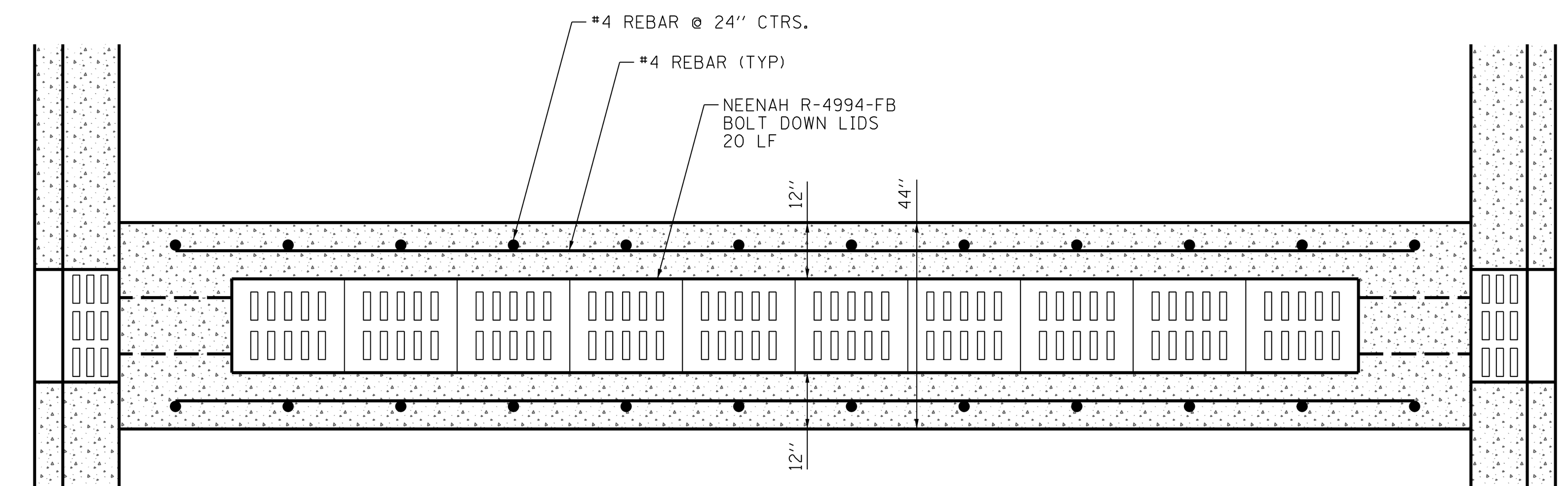

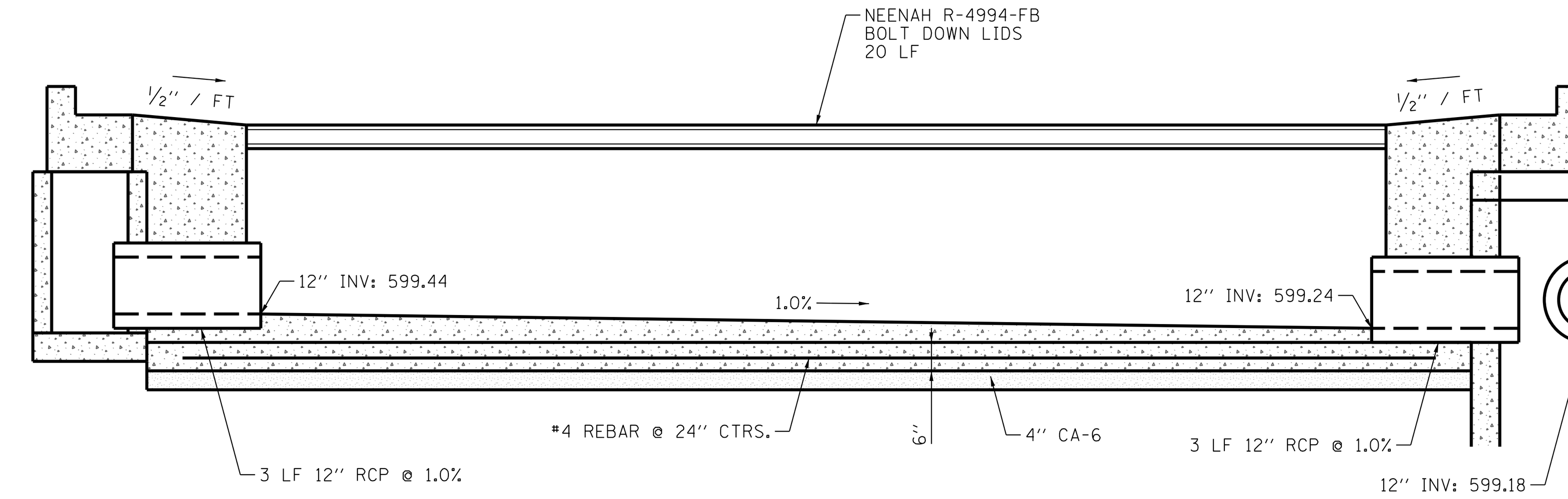

Trench Drain - Pavement (Jackson Street)

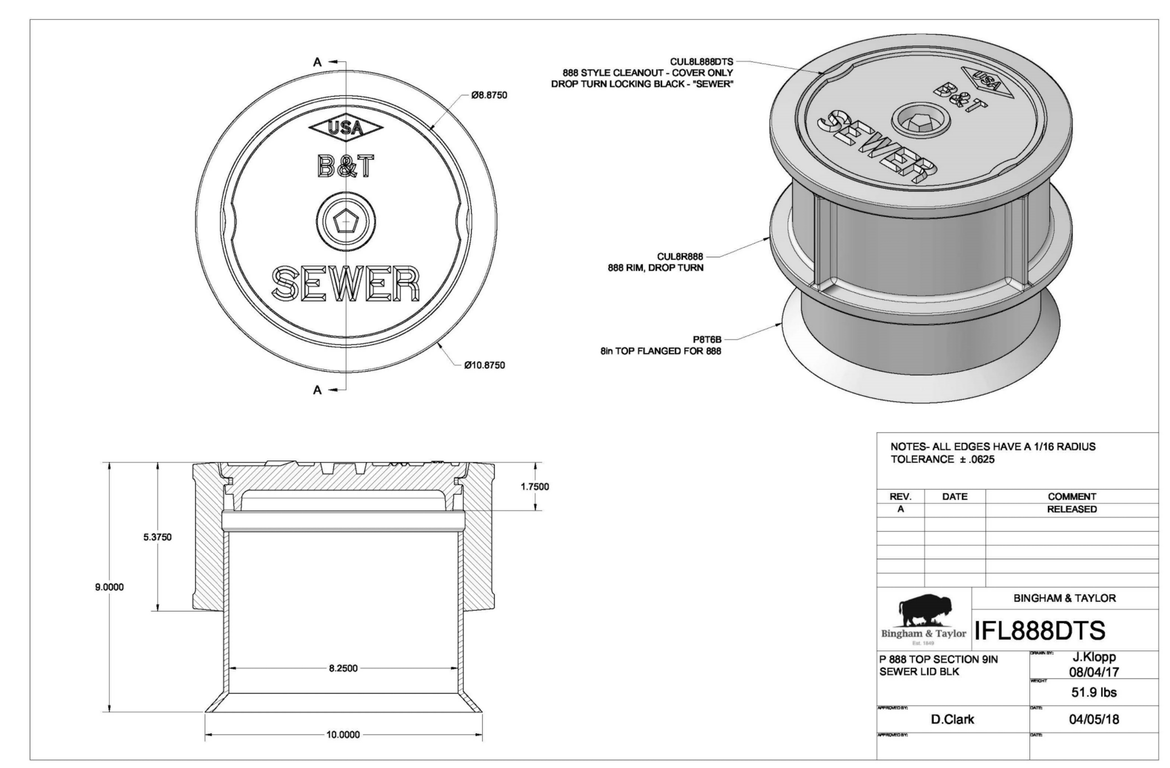

⚠ Cast Iron Cleanout Enclosure

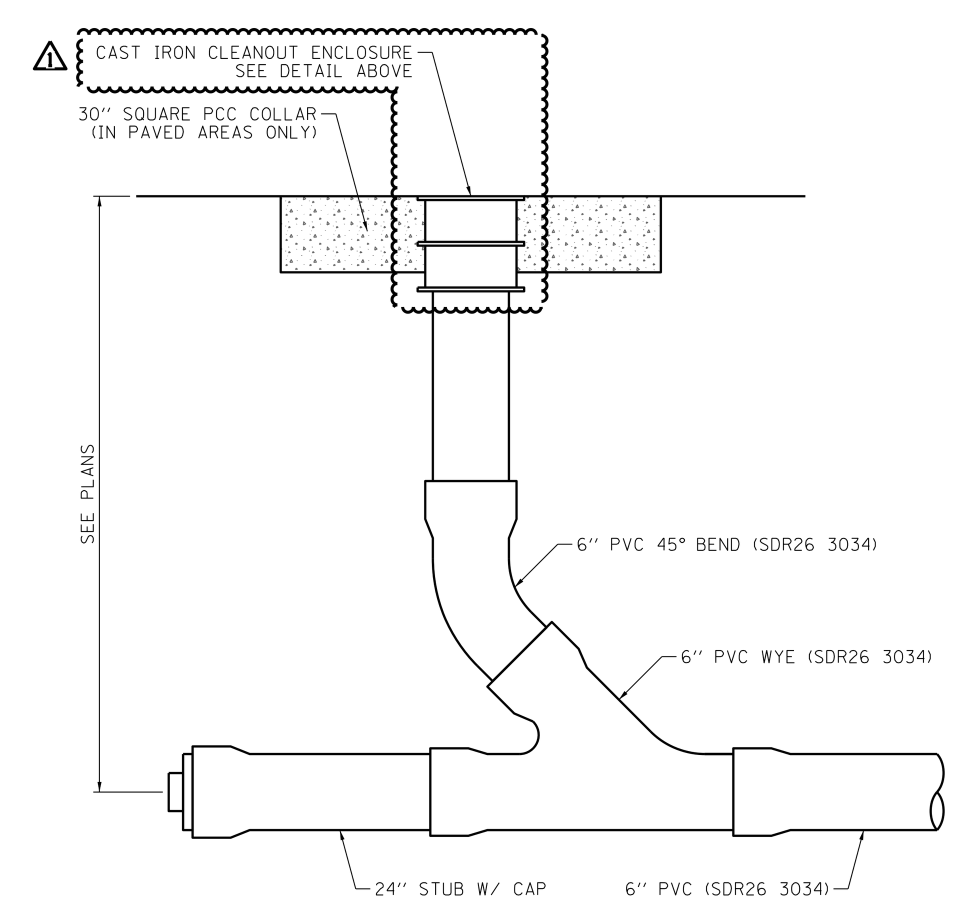

Sanitary Cleanout

TECHNICAL SPECIFICATIONS

NDS WE PUT WATER IN ITS PLACE

2 FT. METAL PERFORATED DURA SLOPE GRATE

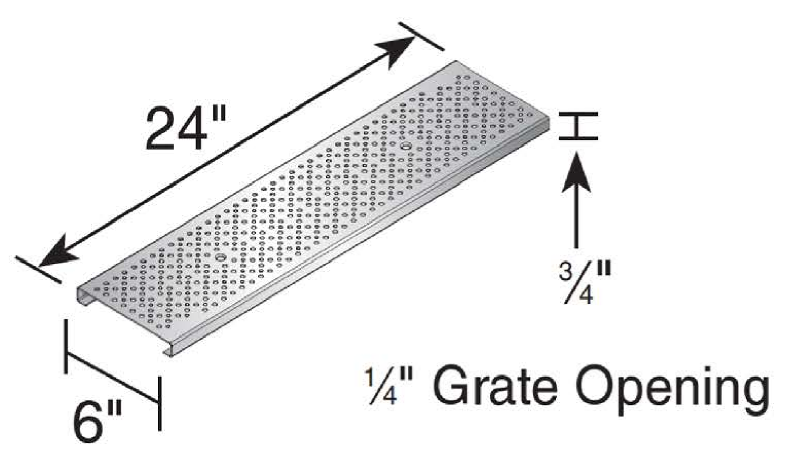

Material: Stainless Steel (DS-226), Galvanized Steel (DS-228)
Weight: DS-226—3.16 lbs each
DS-228—3.83 lbs each
Fits: Use with Dura Slope Channel Drains and Dura Slope Catch Basin (DS-340)
Grate Opening: 7.63 in^2 per foot
Will accommodate 23.34 gallons per minute per foot with 1/2" of head.

Load Recommendation Guide

Class A
- Loads of 1-60 psi.
- Recommended for pedestrians, bicycles and wheel chair traffic.

Note: Some installations may require a concrete collar to meet load rating. Loads are based on encasing product in concrete. Product must be installed using NDS instructions.

ADA Compliance

NDS provides a wide selection of grates that are compliant with the Americans with Disabilities Act. The ADA Accessibility Guidelines For Buildings and Facilities Section 4.5.4 specifies that ground and floor grates "shall have spaces no greater than 1/2 in (13 mm) wide in one direction."

We are pleased to provide grates that comply with these requirements, so that no individual need be limited from accessing the area safely and confidently.

To see if a grate is ADA compliant, please check the description of the product in our NDS Drainage Catalog: products that meet these requirements are marked "ADA compliant."

Like to find out more about ADA compliance and NDS? Send us your question and we'd be happy to help.

ADA Compliant/Heel-proof

851 N. Harvard Avenue
Lindsay, CA 93247
800-726-1994

Visit ndspro.com for specs, detail drawings, and case studies

NDS WE PUT WATER IN ITS PLACE

NDS WE PUT WATER IN ITS PLACE

NDS, INC.
851 NORTH HARVARD AVE.
LINDSAY, CA 93247
TOLL FREE: 1-800-726-1994
PHONE: (559) 562-9888
FAX: (559) 562-4488
www.ndspro.com

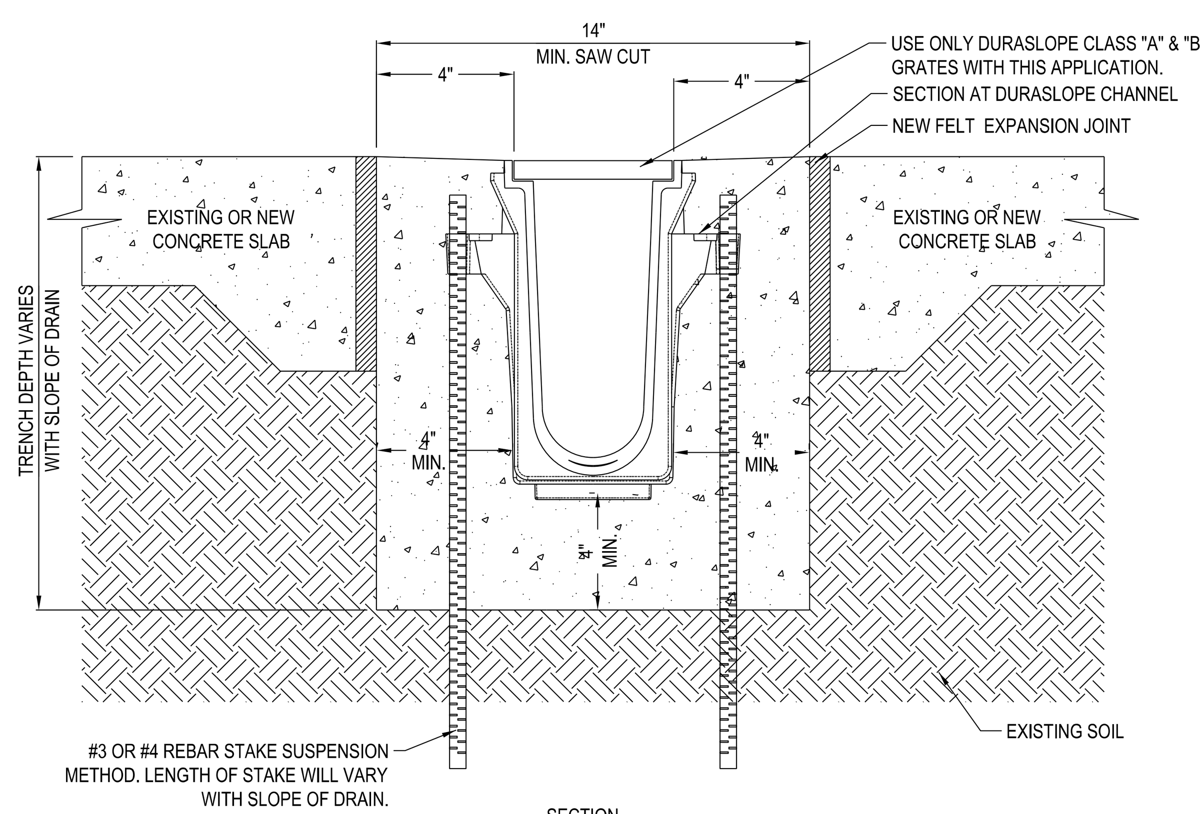

SECTION

NOTES:
1. CHANNELS TO BE INSTALLED WITH BLANK GRATE. GRATE TO BE PROTECTED FROM CONCRETE POUR (COVER HOLES WITH TAPE).
2. INSTALLATION TO BE COMPLETED IN ACCORDANCE WITH MANUFACTURER'S SPECIFICATIONS.
3. DO NOT SCALE DRAWING.
4. THIS DRAWING IS INTENDED FOR USE BY ARCHITECTS, ENGINEERS, CONTRACTORS, CONSULTANTS AND DESIGN PROFESSIONALS FOR PLANNING PURPOSES ONLY.
5. ALL INFORMATION CONTAINED HEREIN WAS CURRENT AT THE TIME OF DEVELOPMENT BUT MUST BE REVIEWED AND APPROVED BY THE PRODUCT MANUFACTURER TO BE CONSIDERED ACCURATE.

DURA SLOPE TRENCH DRAIN SYSTEM

DURA SLOPE INSTALLATION DETAIL - CLASS 'A' & 'B' 4" ENCASMENT, REBAR SUSPENSION METHOD

REVISION DATE 3-5-2015

DATE	REVISIONS	ISSUE
3/1/19	ADDENDUM #1	1.
2/21/19	ISSUED FOR BIDDING	

PROJECT STAFF
PROJECT MANAGER: SCOTT TROTTER, P.E.
ENGINEER: TERRY HEITKAMP, P.E.
ENGINEER:
ENGINEER:
TECHNICIAN: MIKE DAVISON
TECHNICIAN:

TROTTER and ASSOCIATES, INC.
ENGINEERS AND SURVEYORS
40W201 Wasco Road, Suite D
St. Charles, Il. 60175
Ph.: 630-587-0470 • Fax: 630-587-0475

The Reserve at Hudson Crossing - Roadway Improvements

Miscellaneous Details

Oswego, Kendall County, Illinois

Project No.: SH0002
File Name: 91_DTL_MISC.dgn
Issue Date: 3/1/2019
Scale: N.T.S.
Sheet Number
91