ENGINEERING PLANS FOR:

VARIOUS WATER MAIN REPLACEMENTS

VILLAGE OF OSWEGO

KENDALL COUNTY, ILLINOIS

2020

SITE BENCHMARK

SEE SHEET C-06 FOR BENCHMARK INFORMATION

Dial 811 or 1-800-892-0123

Know what's below. Call before you dig.

JULIE DESIGN TICKET NUMBER:#
X2110347,X2110361,X2110371

WITH THE FOLLOWING:
COUNTY KENDALL COUNTY
CITY–TOWNSHIP OSWEGO–OSWEGO TOWNSHIP
SEC. & 1/4 SEC. NO.# 9 & 17–37 N.–8 E.

(2) Working Days before you dig
(Excluding Sat., Sun. & Holidays)

NOTE:

- HR GREEN, INC. IS TO BE NOTIFIED 3 DAYS PRIOR TO CONSTRUCTION START.
- HR GREEN, INC. SHALL BE INCLUDED IN ALL PRE–CONSTRUCTION MEETINGS.
- ANY KNOWN DISCREPANCIES ON THIS PLAN SET MUST BE BROUGHT TO THE ATTENTION OF HR GREEN, INC. PRIOR TO THE START OF CONSTRUCTION.

CLIENT:

VILLAGE OF OSWEGO
100 PARKERS MILL
OSWEGO, IL 60543
630–554–3618

PROJECT CONTACT:
MS. JENNIFER HUGHES
PUBLIC WORKS DIRECTOR
100 PARKERS MILL
OSWEGO, IL 60543
630–554–3618

CIVIL ENGINEER:

HR GREEN
2363 SEQUOIA DRIVE, SUITE 101
AURORA, ILLINOIS 60506
TEL: (630) 553–7560
FAX: (630) 553–7646

DAVID W. SCHULTZ, P.E. – PROJECT MANAGER
TEL: (630) 708–5002

SURVEYOR:

HR GREEN
2363 SEQUOIA DRIVE, SUITE 101
AURORA, ILLINOIS 60506
TEL: (630) 553–7560
(630) 553–7646

BERNIE BAUER, P.L.S. – PROJECT SURVEYOR
(630) 708–5033

CONTACT INFORMATION

	CONTACT INFORMATION	TELEPHONE #
J.U.L.I.E.	DESIGN TICKET #X2110347, X2110361,X2110371	ILLINOIS JULIE. 800–892–0123
CITY CONTACT	VILLAGE OF OSWEGO MS. JENNIFER HUGHES PUBLIC WORKS DIRECTOR/VILLAGE ENGINEER	630–554–3618 630–554–3618
	TIMOTHY ZASADA ASSISTANT PUBLIC WORKS DIRECTOR–UTILITY	630–551–2182
	MARK RUNYON 100 PARKERS MILL OSWEGO, IL 60543	630–554–3242 630–330–3209
SANITARY	FOX METRO WATER RECLAMATION DISTRICT KEITH ZOLLERS ENGINEERING AND FIELD SUPERVISOR	630–301–6810
	MICHAEL L. FRANKINO ASSISTANT ENGINEERING SUPERVISOR 1135 S. LAKE ST. MONTGOMERY, IL 60538	630–301–6805
ELECTRICAL POWER	COMED DESIGN STAGE LOCATE LINE PROJECT # X2110347–OSWEGO	630–576–7094
	COMED REPRESENTATIVE – USIC FRANK COSTANGO ADMINISTRATIVE ASSISTANT 860 OAK CREEK DR LOMBARD, IL 60148	630 396 8224
NATURAL GAS	NICOR GAS PROJECT #SC16905 BRUCE KOPPANG DOT LIAISON – ENGINEERING 1844 FERRY RD NAPERVILLE, IL 60563	630–388–3046

	CONTACT INFORMATION	TELEPHONE #
TELEPHONE	ATT/DISTRIBUTION G11629@ATT.COM JANET AHERN 1000 COMMERCE DRIVE, FLOOR 1 OAK BROOK, IL 60523 MM3781@ATT.COM	630–573–5450 (630) 573–5495
CABLE	COMCAST MARTHA GIERAS 680 INDUSTRIAL DRIVE ELMHURST, IL 60126	224–229–5862
FIBER	METRO FIBERNET, LLC KORIE NELLIS KORIE.NELLIS@METRONETINC.COM OSP ENGINEERING FIBERDESIGNENGINEERING@QSERVCO.COM	812–759–7967 812–213–1378
FIBER	MIDWEST FIBER NETWORKS, LLC RICHARD TRGOVEC RTRGOVEC@MIDWESTFIBERNETWORKS.COM	414–459–3554
GEOTECHNICAL	RUBINO ENGINEERING MICHELLE LIPINSKI, P.E. PRESIDENT PROJECT # G19.100 425 SHEPARD DR. ELGIN, IL 60123	847–931–1555
LOCATING SERVICES	USIC LOCATING SERVICES INFORMATION NOT PROVIDED	
IEPA	I.E.P.A. – PERMIT SECTION. DIVISION OF WATER POLLUTION P.O. BOX 19276 SPRINGFIELD, IL 62794–9276	217–782–0610

LOCATION MAP

PROJECT LOCATION

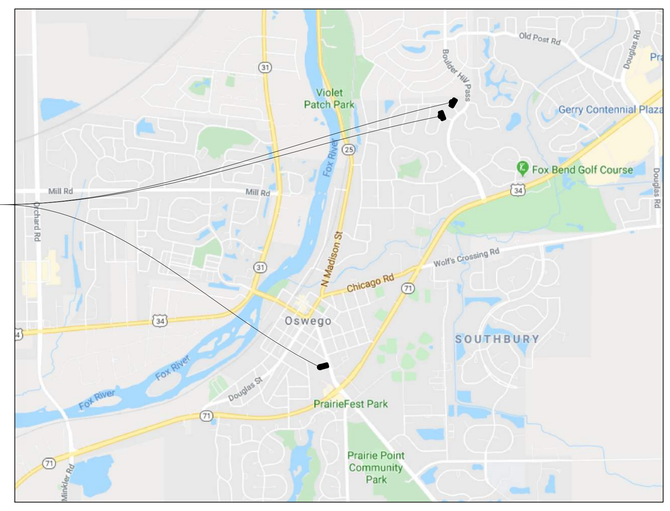

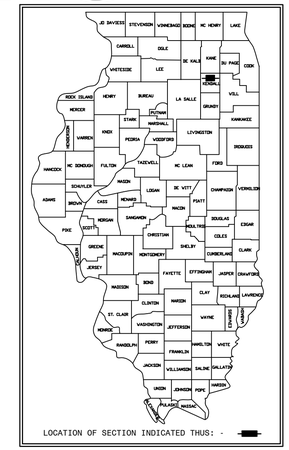

Sheet List Table

Sheet Number	Sheet Title
C–01	COVER SHEET
C–02	SPECIFICAITONS AND NOTES
C–03	SPECIFICATIONS AND NOTES CONT.
C–04	SPECIFICATIONS AND NOTES CONT.
C–05	LEGENDS, ABBREVATIONS AND SUMMARY OF QUANTITIES
C–06	VICINITY – OVERALL PLANS
C–07	BROCK CT. – REMOVAL AND WATER MAIN INSTALLATION PLAN
C–08	SEDGWICK CT. – REMOVAL AND WATER MAIN INSTALLATION PLAN
C–09	FARO CT. – REMOVAL AND WATER MAIN INSTALLATION PLAN
C–10	BROCK CT. – RESTORATION PLAN
C–11	SEDGWICK CT.– RESTORATION PLAN
C–12	FARO CT. – RESTORATION PLAN
C–13	ERROSION CONTROL SPECIFICATIONS
C–14	EROSION CONTROL DETAILS
C–15	CONSTRUCTION DETAILS
C–16	CONSTRUCTION DETAILS
C–17	CONSTRUCTION DETAILS
C–18	CONSTRUCTION DETAILS
C–19	CONSTRUCTION DETAILS
C–20	CONSTRUCTION DETAILS
C–21	TEST HOLE BORING

CERTIFICATION

PROFESSIONAL ENGINEER'S SIGN & SEAL

2/28/2020

EXP: 11/30/2021

DAVID W. SCHULTZ
062–057616
REGISTERED PROFESSIONAL ENGINEER OF ILLINOIS
EXP. 11/30/2021

NOTE: THIS SIGNATURE & SEAL ONLY APPLIES TO DESIGN INFORMATION PREPARED BY HR GREEN, INC. (SHEETS C–01–C–21)

INFORMATION INCLUDED IN THIS PLAN SET WHICH HAS BEEN COMPLETED BY OTHER CONSULTANTS IS NOT CERTIFIED BY THIS SIGNATURE & SEAL.

SEE INDEX OF SHEETS FOR INFORMATION INCLUDED BY OTHERS

HRGreen

2363 SEQUOIA DRIVE, SUITE 101 | AURORA, IL 60506
Phone: 630.553.7560 | Toll Free: 800.728.7805 | Fax: 630.553.7646 | HRGreen.com

FINAL – FOR BIDDING

NO.	DATE	BY	REVISION DESCRIPTION

ILLINOIS DESIGN FIRM # 184.001322
2363 SEQUOIA DRIVE, SUITE 101
AURORA, IL 60506
PHONE: 630.553.7560
FAX: 630.553.7646
HRGreen

VARIOUS WATER MAIN REPLACEMENT
CLIENT: VILLAGE OF OSWEGO
OSWEGO, IL

FINAL – FOR BIDDING
COVER SHEET

BAR IS ONE INCH ON OFFICIAL DRAWINGS
0 1"
IF NOT ONE INCH, ADJUST SCALE ACCORDINGLY

DRAWN BY: ELC/SAS
APPROVED: DWS
JOB DATE: 03/05/2020
JOB NO: 180055.03

DRAWING
C–01

J:\2018\180055\180055.03-Various_Residential_Watermain_Replacement_Areas\CAD\Dwgs\C\180055.03-Cover.dwg
Xrefs: xgt-1-dh01; xce-Tabulations

SPECIFICATIONS & GENERAL NOTES

VILLAGE OF OSWEGO GENERAL NOTES AND SPECIFICATIONS

SPECIFICATIONS, STANDARDS AND SPECIAL PROVISIONS

All construction shall be done in accordance with the latest edition in effect on the date of invitation for bids, of the following:

All items of this project shall be governed by specifications included in the documents listed below:

A. "Standard Specifications for Road and Bridge Construction" prepared by the Department of Transportation of the State of Illinois and adopted by said department (latest edition) and hereinafter referred to as the "Standard Specifications".
B. "Supplemental Specifications and Recurring Special Provisions" adopted by the Illinois Department of Transportation (latest edition).
C. "Standards and Specifications for Soil Erosion and Sediment Control" by IEPA– Illinois Urban Manual – a technical manual designed for Urban Ecosystem Protection and Enhancement, (latest edition).
D. "Standard Specifications for Water and Sewer Main Construction in Illinois" (latest edition).
E. "Illinois Manual on Uniform Traffic Control Devices for Streets & Highways". (latest edition)
F. "Fox Metro Water Reclamation District Standard Specifications" (latest edition)
G. In the event of a conflict between these various standards, the Village of Oswego Subdivision and Development Control Regulations standards shall apply. (latest edition)

In addition the following special provisions supplement the said specifications, and in case of conflict with any part or parts of said specifications, these special provisions shall take precedence and shall govern.

GENERAL NOTES

1. All traffic control and other advisory signs needed for construction are to be furnished by the developer/contractor in accordance with Section 107 of the Standard Specifications.
2. All work performed shall comply with all applicable rules and regulations of the OSHA. The developer/contractor is responsible for providing a safe and healthful working condition throughout the construction of the various improvements.
3. The developer/contractor is responsible for notifying JULIE 1–800–892–0123 at least 48 hours in advance of construction operations. All utilities must be staked/located before construction.
4. The developer/contractor is responsible for notifying the Village of Oswego Public Works Dept. (630) 554–3242 a minimum of 48 hours before construction activities. A 24–hour notice must be provided for inspections and tests. Village staff must operate all watermain valves and hydrants only.
5. The developer/contractor shall protect and preserve all section/subsection monuments or property monuments until the owner; their agent or an authorized surveyor has witnessed or otherwise referenced their locations.
6. The developer/contractor shall be aware of potential conflicts with existing utilities as indicated on the plans. These areas shall be excavated to determine elevations before beginning construction and any irregularities turned over to the design engineer.

EARTHWORK AND GRADING

1. All fill placed under the proposed pavement shall conform to Section 205 of the referenced IDOT "Standard Specifications". This includes (but is not limited to) the removal of topsoil from fill areas and the proper compaction of fill.
2. The subgrade for roadways and sidewalks shall be free of unsuitable material and shall be compacted to a minimum of 95% of modified proctor dry density. Testing for compaction shall be the responsibility of the developer/contractor and the Village shall be provided with a copy of the testing report.
3. All earthwork shall result in a final black dirt placement within ~0.10 feet of the approved plan with record "as–built" drawings (and stage vs. storage calculations where appropriate) prepared by the design engineer of record and submitted for Village review and approval.
4. All excess earthwork materials, if not to be utilized as fill material, shall be completely removed from the site and disposed of off–site by the developer/contractor unless otherwise directed by the Village Engineer.
5. All topsoil and organic materials shall be stripped and removed before the placement of fill materials.
6. Testing: The developer/contractor shall provide as a minimum, a fully loaded six wheeled truck for proof rolling the roadway subgrade prior to the installation of curbs and base material. The truck shall be driven slowly over the subgrade and the Village Engineer or their designated representative shall witness any deflections/depressions exceeding one (1") inch in depth. These areas of unsuitable material shall be marked for removal and replacement with suitable materials as specified by the "Standard Specifications". The granular sub–base shall be similarly proof rolled for deflections/depressions exceeding one–half (1/2") inch in depth.
7. The developer/contractor shall use care in grading operations around trees, shrubs, and bushes, which are to be saved so as not to cause injury to the roots, trunks, or limbs. Protective fencing shall be placed around vegetation to be saved. Root saw– cutting shall be at the direction of the Village Engineer.

EROSION CONTROL MEASURES

1. All erosion control measures shall be in compliance with the latest revision of the Standards and Specifications for Soil Erosion and Sediment Control" by IEPA–and the Illinois Urban Manual – a technical manual designed for Urban Ecosystem Protection and Enhancement, June 2013 or latest edition and in accordance with the erosion control plan.
2. All erosion control measures must be checked by the developer/contractor on a weekly basis and after every storm of one half inch of rainfall or greater. Any repairs or sediment removal needed to ensure adequate erosion control must be completed immediately, at the expense of the developer/contractor.
3. The work site shall be mass graded to provide for positive drainage at all times during construction. Final grades shall be protected from erosion and accumulation of sediments.

A. SOIL STABILIZATION
1. Existing vegetation cover and topsoil – strip topsoil and remove existing vegetation. Stockpile on–site for future re–use at the location designated on the plan.
2. Temporary seeding – temporary seeding shall be placed within 15 days to all disturbed areas that are scheduled to remain stripped for more than 60 days.
3. Permanent seeding – install permanent seeding or sod immediately following the finished grading and topsoil placement.
4. Slope protection – protect all seeding on slopes with mulch, secured excelsior blankets, or equal.

B. SEDIMENT CONTROL
1. Protect adjacent properties from encroaching sediments by preserving a vegetated buffer strip or with siltation fencing placed around the perimeter of the site.
2. All newly constructed storm sewer structures shall be provided with inlet filter bags.
3. Temporary Rock Check Dams, Coir Logs (or alternative approved by the Village Engineer) shall be placed a minimum of every 250' in all overland flood swales, rear yard swales, or other longitudinal swales.
4. The developer/contractor must remove all erosion control measures within 30 days of final site stabilization.

C. WATERMAIN CONSTRUCTION
1. All watermain work shall be constructed in accordance with the applicable "Standard Specifications for Water and Sewer Main Construction in Illinois" latest edition.
2. Watermains shall have a minimum cover of 5.5' and shall be installed in a straight alignment unless specifically shown otherwise on the approved plans. Minimum cover may be reduced, at the discretion of the Village Engineer, provided that satisfactory measures are taken to insulate and protect the pipe.
3. All watermains shall be cement lined ductile iron pipe, class 52 conforming to AWWA C–151 with push–on or mechanical joints and shall be encased in polyethylene film in accordance with AWWA C–105–82. Fittings shall be cement lined, tar coated cast iron with mechanical joints rated 250 psi per AWWA C110/ANSI 21.20.
4. All pipe and fittings shall be manufactured in the United States or approved equal.
5. All main line valves shall be "American Flow Control" type gate valves and housed in a precast concrete vault of the appropriate size.
6. All hydrants shall be "Waterous Pacer" model WB–67 –250 or Clow Medallion type and include a gate valve in a metal box with bracing and trench adapter.
7. All corporation stops shall be "A Y McDonald" model, compression type.
8. All curb stops shall be "A Y McDonald" model.
9. All watermains shall be pressure tested and disinfected in accordance with the standards and procedures set by the Village. Minimum testing procedure shall comply with the Standard Specifications for Sewer and Watermain Construction in Illinois Section 41–2.13 and Section 41–2.14.
10. Only Village staff is allowed to operate valves and hydrants. A minimum of 24 hours advance notice must be given to the Village Public Works Department for the operation of valves and hydrants.

PROTECTION OF WATERMAIN AND WATER SERVICE LINES

Watermains and water service lines shall be protected from sanitary sewers, storm sewers, combined sewers, sewer service lines, and drain tiles as follows:

A. WATERMAINS
1. Horizontal Separation
   a. Watermains shall be laid at least ten feet horizontally from any existing or proposed sanitary sewer, storm sewer, combined sewer, sewer service, and drain tile.
   b. Watermains may be laid closer than ten feet to a sewer line when:
   i. Local conditions prevent a lateral separation of ten feet.
   ii. The watermain invert is at least 18 inches above the crown of the sewer; and
   iii. The watermain is either in a separate trench or in the same trench on an undisturbed earth shelf located to one side of the sewer.
   c. Both the watermain and sewer/drain shall be constructed of slip–on or mechanical joint cast or ductile iron pipe, pre–stressed concrete pipe or PVC pipe meeting the requirements of section 653.111 when sewer shall be pressure tested to the maximum expected surcharge head before backfilling.
2. Vertical Separation
   a. A watermain shall be laid so that its invert is 18 inches above the crown of the sewer or drain whenever watermains cross storm sewers, sanitary sewers or sewer services. The vertical separation shall be maintained for that portion of the watermain located within ten feet horizontally of any sewer or drain crossed. A length of watermain pipe shall be centered over the sewer to be crossed with joints equidistant from the sewer or drain.
   b. The sewer or drain shall be constructed of slip–on or mechanical joint cast or ductile iron pipe, pre–stressed concrete pipe, (storm sewer only), or PVC pipe meeting the requirements of section 653.111, or the sewer or drain shall be sleeved with steel pipe or constructed of reinforced concrete pipe conforming to ASTM C–76 with gasket joints conforming to ASTM C–361 (storm sewers only) for a distance of ten feet either side of the conflict,
   i. It is impossible to obtain the proper vertical separation as described in a) above; or
   ii. The watermain passes under a sewer or drain
   c. A vertical separation of 18 inches between the invert of the sewer or drain and the crown of the watermain shall be maintained where a watermain crosses under a sewer. In addition, the sewer shall be constructed of watermain quality pipe. Support the sewer or drain lines to prevent settling and breaking the watermain.
   d. Construction shall extend on each side of the crossing until the normal distance from the watermain to the sewer or drain line is at least ten feet.

B. WATER SERVICE LINES
1. The horizontal and vertical separation between water service lines and all storm sewers, sanitary sewers, combined sewers, sanitary sewer services, or any drain tiles shall be the same as watermain separation described in (A) above.
2. Water pipe described in (A) above shall be used for sewer service lines when minimum horizontal and vertical separation cannot be maintained.

C. SPECIAL CONDITIONS
1. Watermains and water service lines shall be protected against entrance of hydrocarbons through diffusion through any material used in construction of the line.

VILLAGE OF OSWEGO GENERAL NOTES AND SPECIFICATIONS

THE VILLAGE OF OSWEGO SUBDIVISION AND DEVELOPMENT CONTROL REGULATIONS.

SECTION 8.00 – DESIGN STANDARDS

8.06 SPECIFICATION REQUIREMENTS
The latest "Village of Oswego General Notes and Specifications" and the General Notes/construction details from the Fox Metro Water Reclamation District (FMWRD) shall be appended to the plans as a minimum. The most recent editions of the various standard published material specifications, prepared by associations such as the "American Society for Testing and Materials" (ASTM), the "American Water Works Association" (AWWA), the Illinois Department of Transportation (IDOT), the Illinois Urban Manual, and the Standard Specification for Water and Sewer Main Construction in Illinois may be incorporated by reference.

The specifications may also include more project specific general notes not referenced in the Village General Notes and Specifications. Wherever there is conflict between the written specifications and the drawings, the more stringent requirements, as determined by the Village Engineer, shall apply.

The specification shall include a clause that all work included shall be guaranteed by the Contractor to be free from defects in construction and materials, and in substantial conformance with the approved drawings and specifications. A statement of comprehensive liability insurance shall also be provided as required in Section 8.09 of the Subdivision Ordinance.

8.15 RECORD "AS BUILT" DRAWINGS
Two (2) prints of record "as built" drawings signed and sealed by the Design Engineer or other independent professional employed by the Owner/Developer shall clearly show any and all changes from the approved engineering drawings. The format of said record "as built" drawings will consist of the approved final engineering drawings with the proposed information stricken and the record information appended adjacent to the stricken information, in a legible fashion. Other "as built" exhibits may be allowed for the sake of clarity, at the discretion of the Village Engineer. Said record "as built" drawings shall also be submitted via electronic format as specified on the "Digital Submittal Checklist" (found on the Village's website at www.oswegoil.org) and in accordance with the Village's GIS. Record "as built" drawings shall be submitted to the Village Engineer prior to the Owner/Developer's request for inspection of the required improvements. The record "as–built" drawings must use a datum based on the Village's Geodetic Control Network and using two (2) control points to establish the datum. The control points can be found on the Village's website at www.oswegoil.org. The record "as built" drawings shall be based on actual measurements of both horizontal and vertical dimensions, made after completion of the work. Record "as built" drawings must include verification of all stormwater management basin volumes with stage vs. storage calculations, overflow weir size/elevations, all associated storm sewers, and restrictor(s).

8.16 FINAL PROCESSING AND INITIAL/FINAL ACCEPTANCE
Upon written request of the Owner/Developer, and after the required improvements have been completed and supporting documents have been submitted, the Village Engineer or Public works representative shall make a preliminary inspection of the completed work. The Village Engineer or Public Works representative shall then prepare a punch list, itemizing all items not meeting the requirements of the approved drawings and specifications. The supporting documents for "Initial Acceptance" shall be submitted to the Village Engineer and shall consist of the following:

1. Record "As Built" Drawings. See Section 8.15 above.
2. Copy of the Recorded Plat of Subdivision, if applicable.
3. Copies of all recorded easement documents, if applicable.
4. Sanitary Sewer Video Records
5. Storm Sewer Video Records
6. Release of Title Insurance Policy
7. Recorded Copy of Homeowner's Association Covenants Codes and Restrictions
8. Bill of sale; Contractor's Affidavit and Lien Waivers. The bill of sale will transfer ownership of the public improvements to the Village for a nominal sum, typically $10. The Contractor's Affidavit and Lien Waivers in accordance with the Illinois Mechanics Lien Act, for all land improvements to be accepted by the Board.
9. Surveyor's Statement. Statement signed by an Illinois Registered Land Surveyor stating that all of the required monuments and irons are in place.
10. Satisfactory Performance Guarantee. The submission from the Owner/Developer of a deposit in cash, irrevocable letter of credit, or surety bond, equal to ten (10%) percent of original security amount. This deposit shall be a guarantee of satisfactory performance of the public improvements and shall be held by the Village for a minimum of twelve (12) months after "Initial Acceptance" or sixty (60) months after "Initial Acceptance" in the case of wet bottom basins. Upon recommendation from the Village Engineer, the Village Board shall by resolution make "Initial Acceptance" of the public improvements.

The Village may reduce the posted Performance Guarantee as each division of the required land improvements is "Initial Accepted". Land improvements shall be divided into the following categories as applicable:

a. Sanitary sewer mains and appurtenances;
b. Water mains and appurtenances;
c. Storm sewer mains, drainage ways, and storm water management facilities;
d. Streets and parkway grading and seeding/sodding;
e. Erosion and sediment control;
f. Miscellaneous improvements (landscaping, street traffic signs, street lights, pedestrian paths, traffic signals, etc.).

The posted Performance Guarantee shall only be reduced by authorization of the Village Board, after review and recommendation by the Village Engineer. Approximately two to three months prior to the expiration of the "Initial Acceptance" Performance Guarantee, the Village Engineer or Public Works representative shall make a final inspection of the public improvements and prepare a punch list of minor repairs. Upon satisfactory completion of this final punch list, with the Village Engineer's written recommendation, the Village Board shall by resolution make "Final Acceptance" of the public improvements. The maintenance responsibility for the public improvements shall then be with the Village.

SECTION 8.20 EROSION CONTROL, PROTECTION/RESTORATION OF EXISTING IMPROVEMENTS

8.201 – INTRODUCTION
Project construction required in connection with a development often occurs in or adjacent to areas with existing surface or underground improvements. The intent of this Section 8.2 is to specify Village requirements relative to construction affecting existing improvements. Drawings and specifications presented for Village approval shall provide for the implementation of the requirements of this Section.

8.202 – EROSION CONTROL
Erosion and sediment control due to run–off, equipment leaving and entering a construction site, wind, etc., are required for all construction, including individual single–family lots, in the Village of Oswego. Site engineering or grading plans for projects shall either contain specific provisions for erosion control or a separate erosion control plan. The provisions or plan will follow accepted techniques and details as found in the "Illinois Urban Manual", "Kendall County Stormwater Management Ordinance" (latest edition) or as directed by the Village Engineer (latest revision). Projects disturbing one acre or greater of land area shall comply with Illinois Environmental Protection Agency (IEPA) regulations with a Notice of Intent for Construction Site Activities permit application; and a copy shall be provided to the Public Works Department. A Stormwater Pollution Prevention Plan (SWPPP) shall also be required per IEPA requirements and kept at the project site.

Steep slopes (exceeding 3:1) are to be avoided whenever possible. As much natural vegetation as possible should be retained, especially next to lakes, creeks, or other natural water sources. The erosion control plan should indicate the location of soil stockpiles that are to remain on–site longer than four weeks. These stockpiles shall be immediately surrounded by functioning silt fences. Stockpiles shall not be located next to a lake, creek, natural water source, Special Flood Hazard Area, and shall not be located with a downslope drainage length of less than twenty–five (25) feet to a roadway, drainage channel or body of water, and if the stockpiles are to be left undisturbed for more than 15 days then the stockpile shall be seeded to minimize erosion. Undeveloped lots within an industrial/commercial development, left inactive for more than 90 days, shall be rough graded and seeded. See also section 8.613l for the timing of rough grading and seeding of undeveloped lots.

Erosion control measures should be used which include, but are not limited to, sediment basins, diversion channels, stabilized aggregate haul roads at all construction entrances and pavement cleaning operations, silt fences, straw bales, inlet baskets, and any other measures necessary or as directed by the Village Engineer. Village roadways must be free and clear of any dirt or construction debris at the end of each construction day.

The Design Engineer's opinion of probable cost must include specific line items pertaining to erosion and sedimentation control including the installation and maintenance costs thereof and shall be included in the Owner/Developer's letter of credit.

8.202B – MAINTENANCE OF CONTROL MEASURES
All soil erosion and sediment control measures shall be maintained periodically by the applicant or subsequent landowner during the period of land disturbance and development of the site in a satisfactory manner to ensure adequate performance and as necessary to meet the terms of the "Kendall County Stormwater Management Ordinance" (latest edition).

8.202C – INSPECTION
The Village shall make periodic inspections and shall either approve that portion of the work completed or shall notify the permittee wherein the work fails to comply with the erosion and sedimentation control plan as approved. Plans for grading, stripping, excavating, and filling work approved by the Village shall be maintained at the site during the progress of the work.

Inspections can take place during any or all of the following:

1. Upon completion of installation of sediment and runoff control measures (including perimeter controls and diversions), prior to proceeding with any other earth disturbance of grading;
2. After stripping and clearing;
3. After rough grading;
4. After final grading;
5. After seeding and landscaping deadlines;
6. After final stabilization and landscaping, prior to removal of sediment controls; and
7. Every week or after rainfall events of a ½" or more.

At the completion of any project, the storm sewers, gutters, etc. will be inspected by the Village Engineer or Public Works representative to determine any cleaning or flushing of trapped sediment which may be required. Where required by the Village, and at the Owner's/Developer's expense, storm sewers shall be internally video televised in a color DVD shall be submitted to the Village Engineer along with a written narrative of the findings as measured from the nearest structure.

8.202D – SPECIAL PRECAUTIONS
If at any stage of the grading of any development site the Village determines by inspection that the nature of the site is such that further work authorized by an existing permit is likely to imperil any property, public way, stream, lake, wetland, or drainage structure, the Village may require, as a condition of allowing the work to continue, that such reasonable special precautions to be taken as is considered advisable to avoid the likelihood of such peril. "Special precautions" may include, but shall not be limited to, a more level exposed slope, construction of additional drainage facilities, berms, terracing, compaction, or cribbing, installation of plant materials for erosion control, and recommendations of a registered soils engineer and/or engineering geologist which may be made requirements for further work.

Where it appears that storm damage may result because the grading on any development site is not complete, work may be stopped and the Owners/Developers may be required to install temporary structures or take such other measures as may be required to protect adjoining property or the public safety. On large developments or where unusual site conditions prevail, the Village may specify the time of starting grading and time of completion or may require that the operations be conducted in specific stages so as to ensure completion of protective measures or devices prior to the advent of seasonal rains.

8.203 – PROTECTION OF PROPERTY AND SURFACE STRUCTURES
Trees, shrubbery, fences, poles and all other property and surface structures shall be protected during construction operations. Any fences, poles or other man–made surface improvements which are moved or disturbed shall be restored to their original condition or replaced in kind with new material; as soon as possible after construction is completed.

FINAL – FOR BIDDING

NO.	DATE	BY	REVISION DESCRIPTION

HRGreen
ILLINOIS DESIGN FIRM
184.001322
2363 SEQUOIA DRIVE,
SUITE 101
AURORA, IL 60506
PHONE: 630.553.7560
FAX: 630.553.7646

VARIOUS WATER MAIN REPLACEMENT
CLIENT: VILLAGE OF OSWEGO
OSWEGO, IL

FINAL – FOR BIDDING
SPECIFICAITONS AND NOTES

BAR IS ONE INCH ON OFFICIAL DRAWINGS
0 1"
IF NOT ONE INCH, ADJUST SCALE ACCORDINGLY

DRAWN BY: ELC/SAS
APPROVED: DWS
JOB DATE: 03/05/2020
JOB NO: 180055.03

DRAWING
C–02

J:\2018\180055\180055.03–Various_Residential_Watermain_Replacement_Areas\CAD\Dwgs\C\180055.03–GeneralNotes1.dwg
Xrefs: xgt–1–ah01
2/28/2020 12:06:06 PM

SPECIFICATIONS & GENERAL NOTES CONT.

8.204 – INTERRUPTION TO UTILITIES AND DAMAGE TO SURFACE IMPROVEMENTS
A minimum of 48 hours prior to commencement of work, J.U.L.I.E. (1–800–892–0123) and the Village's Department of Public Works must be notified for location of any existing utilities. All reasonable precautions shall be taken against damage to existing utilities.

In the event of a break in an existing water main, gas main, sewer, or underground cable, the Contractor shall immediately notify the Village of Oswego Public Works Department and the appropriate utility. The Contractor shall lend all possible assistance in restoring service and shall assume all costs, charges, or claims connected with the interruption and repair of such services unless it is determined that the utility has not been properly located. In the case of repairing Village utilities, the Village's cost of such work will be billed to the contractor.

8.205 – TRAFFIC CONTROL
All work approved by the Village within public rights–of–way shall conform to the requirements of the latest edition of the Manual of Uniform Traffic Control Devices for Highway Control and Maintenance Operations as published by the Department of Transportation, State of Illinois. The provisions of these standards will be enforced:

1. When an opening is made into the existing pavement;
2. When construction takes place adjacent to the edge of the existing pavement;
3. When a utility crossing is made beneath the existing pavement;
4. When it is necessary to close a lane of traffic due to construction operations;

Permission for road closure must be reviewed and recommended by the Director of Public Works and ultimately approved by the Village Board prior to commencing construction. Signing will be required in strict conformance to the Traffic Control Manual. No construction operation is to commence until such time that all required signs and barricades have been properly erected.

8.206 – PAVEMENT CROSSING
Unless otherwise specifically approved by the Director of Public Works, all conduits crossing existing pavements shall be installed by tunneling, jacking, or auguring. The open cutting of a roadway will only be allowed when the tunneling, jacking, or auguring requirement presents a hardship on the conduit installation. Allowable hardships would include a conflict with another existing utility, adverse weather conditions, a need for expediency, or adverse ground and/or groundwater conditions. A monetary hardship for the developer will not be considered. In all instances, the safety of the public and the construction crews will be considered. When the carrier pipe is a conduit intended to operate under internal pressure, a casing pipe of adequate strength for all applied loads shall be used. The carrier pipe shall be centered and suspended within the casing pipe with poly blocks held in place with stainless steel bands as manufactured by Cascade, or approved equal. Installation requirements for the bands shall follow the manufacturer's recommendations. The nearest face of pits or other open excavations on each side of a traveled pavement shall be at least 10–feet from the edge of pavement, and secured against hazards.

When open cutting is allowed or other pavement opening required, they shall be backfilled prior to the end of the working day unless otherwise authorized by the Village. All excavations shall be backfilled with an IDOT approved mix #2 design of "Controlled Low Strength Material"(i.e. CLSM or Flowable Fill) dispensed from a redi–mix truck up to the sub–grade level. Said CLSM shall be fluid enough to fill all voids and undermines. Upon placement of the CLSM, the trench shall be properly protected with barricades and plated with appropriate steel plates to minimize traffic disruption until the CLSM has sufficiently set up to allow for the remainder of the restoration. In inclement weather a temporary hot–mix asphalt patch of at least 2–inches in thickness shall be constructed after the steel plates have been removed. It is understood that such patching is only temporary and that permanent pavement repair will be required as specified in Article 8.210 of this Section.

8.207 – TRENCHING
Trenches shall be excavated to the depths and grades necessary for pipelines including allowances for bedding materials. As determined by the Village Engineer, unsuitable soils found at or below the bottom of the trench shall be excavated to meet firm subsoil. Maximum trench widths will comply with IDOT Standards and Specifications.

8.208 – BRACING AND SHEETING

Open–cut trenches shall be sheeted and braces as required by governing federal and state laws including all OSHA Safety and Health Standards (29CFR 1926/1910), and as may be necessary to protect life, property, and work.

8.209 – BEDDING AND BACKFILL REQUIREMENTS
8.209A – BEDDING
Bedding shall be provided for all pipes, except where concrete encasement, concrete cradles, boring or jacking are indicated. Bedding shall be a minimum thickness of 4–inches and consist of gravel, or crushed stone ¼ –inch to 1–inch in size. As a minimum, the bedding material shall conform to the requirements of the "Standard Specifications for Road and Bridge Construction", Illinois Department of Transportation. The gradations shall conform to CA6, CA7, CA11 or CA13 therein. Note that when PVC or ABS pipe is used, the bedding material shall extend to a minimum of 12" over the top of the pipe. Bedding shall be properly compacted. Wherever two or more pipes or conduits are placed in the same trench or excavated area, backfill the trench with granular bedding material to support the uppermost pipe or conduit.

8.209B – BACKFILL
For conduits not requiring selected granular backfill, backfill shall be made with materials available from the trench excavation. The material shall be free from rocks and be carefully placed in 12–inch lifts.

For conduits requiring excavation as described in the "Standard Specifications for Road and Bridge Construction" beneath or within 2–feet horizontally of existing or proposed pavements, driveways, or sidewalks or in other areas which, in the opinion of the Village Engineer, are or may be subject to vehicular traffic loading, selected granular backfill shall be provided above the bottom of the trench and shall extend upward to the surface of the ground or pavement. Material for selected granular backfill shall consist of CA–7 Crushed Stone with a 12" thick CA–7 crushed stone "cap". The select granular backfill shall be mechanically compacted according to the Standard Specifications for Water and Sewer Main Construction in Illinois.

8.210 – RESTORATION OF EXISTING IMPROVED SURFACES
8.210A – GENERAL
The Contractor shall restore all permanent type pavements, sidewalks, driveways, curbs, gutters, trees, shrubbery, lawns, fences, poles, and other property and surface structures removed or disturbed during or as a result of construction operations to a condition that existed or better before the work began. The surface of all improvements shall be constructed of the same material and match in appearance the surface of the improvements which were removed.

8.210B – SAW CUTTING
When necessary to remove sections of existing pavement, sidewalk, or curb and gutter, and prior to removal, the edges of the section to be removed shall be cleanly cut out with a concrete saw.

8.210C – REMOVAL OF ROADWAY PAVEMENTS, SIDEWALKS, DRIVEWAYS AND CURBS
Where concrete pavement, sidewalk, driveway, or curbing is cut, the width of the cut shall exceed the actual width of the top of the trench at sub–grade by a minimum of twelve (12) inches on each side. Exposed surface of Portland cement or asphalt concrete shall be cut with a pavement saw to full depth before removal. The pavement must be sawcut perpendicular to the centerline along the edge of the pavement. Sidewalks must be removed and replaced by the whole square.

8.210D – CONCRETE PAVEMENT SURFACE
Where the existing roadway pavement surface is Portland Cement Concrete (PCC), the pavement replacement shall consist of six (6) inch PCC pavement or existing concrete depth, whichever is greater. PCC and construction methods for PCC shall conform to the current requirements of the "Standard Specifications for Road and Bridge Construction" of the Illinois Department of Transportation, applicable Sections for Portland Cement Concrete pavement. Pavement joints and reinforcing in the replacement pavement shall conform to and match that in the adjacent pavement area.

8.210E – BITUMINOUS CONCRETE PAVEMENT SURFACE
Where the existing pavement surface is bituminous concrete and the base consists of a rigid material such as brick or PCC, the base replacement shall consist of 8–inch PCC base course. The PCC shall be as noted in Section 8.210D above.

The minimum surface replacement shall consist of a bituminous prime coat (applied at a rate of 0.1 gal/sy), a 2–3/4 – inch binder course and a 2 – inch minimum surface course conforming to the requirements of the "Standard Specifications for Road and Bridge Construction" of the Illinois Department of Transportation for Hot–Mix Asphalt Binder and Surface Course. Said replacement shall be completed as soon as conditions allow or at the discretion of the Village Engineer.

8.210F – BITUMINOUS PLANT MIX PAVEMENT OR BITUMINOUS TREATED SURFACE – FLEXIBLE BASE
Where the existing pavement is bituminous plant mix material or bituminous surface treatment and the base consists of a flexible material such as gravel, crushed stone, Bituminous Aggregate Mixture, Pozzolanic Material or Soil Cement, the base replacement shall consist of a 6–inch compacted thickness of Bituminous Aggregate Mixture Base Course conforming to the "Standard Specifications for Road and Bridge Construction" of the Illinois Department of Transportation and special provisions thereof. The surface replacement shall be as specified in 8.210E above.

8.210G – CONCRETE SIDEWALKS, DRIVEWAYS, CURB, CURB AND GUTTER
Where necessary to remove and replace concrete sidewalk, driveways, curb, and curb and gutter, replacements shall be made according to the Village's Standards regulating the construction of driveways, approaches and sidewalks. Curb or curb and gutter dimensions and cross–sections shall conform, as nearly as practical, with the existing installations except that at intersections with sidewalk that does not conform to State of Illinois handicap requirements, sufficient depressed curb and gutter along with sidewalk with preformed expansion joints shall be replaced to meet said handicap specifications. One–half–inch (1/2") preformed expansion joints shall be placed at intervals not exceeding 50–feet and at the junction with existing work. Saw cut (IDOT specs govern) crack control contraction joints shall be made every 10 feet (minimum) and shall be a minimum of one–half–inch in depth. Sidewalks shall be finished to match existing adjacent sidewalk surfaces. Finish shall meet current A.D.A. regulations and be required on all handicap sidewalk sections.

Gaps or openings in the curb serving a runoff water quality (Best Management Practice BMP) benefit are allowed at the discretion of the Village Engineer.

8.210H – CULTIVATED LAWNS
Provide topsoil, seeding, sodding, watering, and care of grass during establishment period for a complete surface restoration of lawns, parkways, and other areas disturbed as a result of the construction.

1. Topsoil
   Topsoil shall be furnished pulverized and properly placed, raked, and rolled to a minimum depth of 4–inches. The topsoil furnished shall consist of loose, friable, loamy, non–acid soil, having at least 90 percent passing a no. 10 sieve, free of large roots, brush, sticks, weeds, stones larger than one–fourth (1/4") inch in diameter, and any other debris. Before topsoil is placed, the area to be covered shall be brought to the proper grade. If the existing surface has become hardened or crusted, it shall be loosened to a recommended minimum depth of 12" to provide a suitable bond with the topsoil.

   Apply commercial grade fertilizer uniformly at a rate of 20 pounds per 1,000 square feet. Work fertilizer into soil prior to seeding or sodding.

2. Sodding
   Provide sod in developed areas that were grassed prior to construction and as indicated on the drawings. Sodding shall be used in ditches and drainage swales and on all embankment slopes steeper than 4 to 1 unless protection is provided against erosion of seeding. At the Contractor's option, sodding may be substituted for seeding.

   The cut sod from a local sod farm shall be not less than 2–inches thick. Sod that has been cut more than 48–hours prior to installation shall not be used without the approval of the Village Engineer.

   Sod shall be placed according to the applicable section of the IDOT Standard Specifications. Place sod with edges in close contact and alternate courses staggered. On slopes 2:1 or steeper, sod shall be staked with at least one stake for each piece of sod. Do not place sod when the ground surface is frozen or when air temperatures may exceed 90 degrees Fahrenheit.

   New sod shall be watered daily at the rate specified in the IDOT specification for a minimum of seven–days after the specified initial watering. Village water used shall be metered and paid for by the Contractor. Any defective, dead or dying sod shall be removed and replaced up to one–year after completion of the sodding.

   In ditches, the sod shall be placed with the longer dimension perpendicular to the flow of water in the ditch. On slopes, starting at the bottom of the slope, the sod shall be placed with the longer dimension parallel to the contours of the ground.

SECTION 8.40 – STORM WATER DRAINAGE

8.404B – CULVERTS
Wherever culverts are allowed by the Village Engineer, culverts shall meet the following minimum standards:

1. Minimum pipe diameter of twelve (12") inches.
2. Corrugated metal pipe (CMP) shall be hot–dipped galvanized steel or aluminum steel conforming to AASTO M36. Provide 16 gauge CMP for pipe diameter twenty–one (21") inches and smaller. Provide 12 gauge CMP for pipe diameters twenty–four (24") inches and larger.
3. Reinforced concrete pipe (RCP) shall conform to ASTM C76, minimum Class III.
4. Plastic culvert pipe will not be allowed within the public right of way, unless allowed by the Village Engineer.
5. Culvert invert elevations shall be 3" less than the ditch invert elevations.
6. Minimum cover at driveways shall be six (6") inches.
7. Culverts will be designed to convey a thirty–(30) year storm with less than 0.1' of head created above the natural (without culvert) conditions. The calculation method shall be the rational method for areas up to 20 tributary acres. Tributary areas greater than 20 acres shall be computed using a hydrograph method (HEC–1, HEC–HMS or TR–20, or approved equivalent).
8. No one hundred (100) year storm overtopping of the road is allowed.

8.404C – SWALES/DITCHES
Wherever swales and ditches are allowed by the Village Engineer, swales and ditches shall meet the following minimum standards. (Ditches and culverts may be used in lieu of storm sewers if curbs and gutters are not required.)

1. Minimum grade of one and one–half (1.5%) percent. Preferred slope is two (2%) percent.
2. Maximum grade of ten (10%) percent.
3. Minimum depth of twenty–four (24") below the shoulder of the street.
4. Maximum bank slope of 3:1 under normal conditions.
5. The bottom and banks of ditches with grades between 4 and 8 percent shall be sodded and equipped with permanent ditch checks.
6. The bottom and banks of ditches with grades between 8 and 10 percent shall be paved or otherwise stabilized as approved by the Village Engineer.
7. All areas of the property must be provided with an overland flow path that will pass the 100– year flow at a stage at least eighteen inches (18") below the lowest foundation grades in the vicinity of the flow path. Overland flow paths designed for flows in excess of the minor drainage system capacity are required to be contained in dedicated drainage easements.
8. Ditches will be designed to convey a minimum of a thirty–(30) year storm, and in some instances, a one hundred (100) year storm ditch may be necessary at the discretion of the Village Engineer.
9. Ditches should be trapezoidal shaped and have a 2' bottom.

SECTION 8.50 – WATER SYSTEM

All water main bends shall be made with 45 degree or less elbows and 90 degree elbows will not be accepted. Fittings, building service connections, hydrants, valve vaults/boxes, and appurtenances should not be located in the pavement, sidewalks, or curb. All fittings, building service connections, hydrants, valve vaults/boxes and appurtenances should not be located along water main sections that have been lowered to meet the IEPA vertical separation requirement.

8.504 – FIRE HYDRANTS
8.504B – MATERIAL
Fire hydrants shall meet AWWA C–502 and shall be "Waterous Pacer WB–67–250" or Clow Medallion type with a 5–1/4 inch valve opening, two 2–1/2 inch hose nozzles and one pumper nozzle. Threads shall conform to National Standard Specifications. Construction shall conform to that indicated on the fire hydrant detail. Each hydrant shall be equipped with an auxiliary gate valve complete with roadway box from A. Y. McDonald, or approved equal, and valve box stabilizer. Hydrants shall be installed no closer than two feet or further than six feet from the back of curb. No hydrant shall be installed within 48 inches of any obstruction nor shall any obstruction be placed within 48 inches of a hydrant. The manufacturer shall paint the hydrants red. Hydrants shall be installed with a valve box brace as supplied by BLR Enterprises Inc. or with a trench adapter as supplied by American Flow Control, or approved equals.

8.505 – VALVES
8.505B – VAULTS
All main valves shall be installed in precast concrete vaults conforming to ASTM C478 as detailed in the Valve Vault Detail. All vaults for newly constructed water main shall have flexible rubber watertight pipe connectors. Pressure connection taps/vaults shall seal the pipe entrances for the existing pipe with anti–hydro cement. All auxiliary valves at fire hydrants shall be installed in cast iron valve boxes with stabilizers. Vaults and boxes shall not be allowed in driveways or sidewalks, and must be located on the property lines accessible to Village repair/maintenance vehicles. All valves eight–inch diameter or less shall be in a minimum four– foot diameter vault. All valves ten–inch diameter or greater shall be in a minimum five–foot diameter vault. Pressure connection taps/valves shall be in a minimum five–foot diameter vault. Valve vault frames shall be Neenah R–1530 and lids shall be a "Neenah" type B, or approved equal, with the word "WATER" stamped into the lid. Each valve vault cone and barrel section joint shall also be externally sealed with a 9" wide (min.) sealing band of rubber and mastic. The band shall have an outer layer of rubber or polyethylene with an under layer of rubberized mastic (with a protective film), meeting the requirements of ASTM C–877, type II or type III.
The valve vault lid on designated fire service lines (or valve box lid, where allowed) shall be painted hydrant red to identify them as fire services.

8.505C – TYPES
All valves shall be AWWA C515–01, ductile iron body, bronze fitted, modified wedge disc, resilient seat type with non–rising stem and O–ring packing designed for 250 pound working pressure, as manufactured by American Flow Control, or approved equal.

8.506 – GENERAL DESIGN DETAILS FOR WATER MAINS, 3 – 24 INCH DIAMETER
8.506A – DUCTILE IRON PIPE, FITTINGS AND JOINT TYPE
Provide ductile iron pipe complying with ANSI A21.51, thickness Class 52, with joints complying with ANSI A21.11. External coating shall be standard, as specified for general use in ASA Specification A21.51. All pipe and fittings shall be manufactured in the United States of America, or approved equal. Use internal cement lining complying with ANSI A21.4 or AWWA C205, standard thickness. Whenever river–crossing pipe is required, provide restrained joint, or ball and socket type joints allowing 15 degrees maximum deflection. Use ductile iron fittings with mechanical joint complying with ANSI A21.10 or A21.53. Use internal cement lining complying with ANSI A021.4, standard thickness.

8.506C – DEPTH OF COVER
The depth between the finished grade and the top of the water main shall be not less than five and one–half (5.5') feet or more than seven (7') feet. Where conflicts arise with other underground improvements, the Village Engineer will consider lesser/greater depths.

8.506D – THRUST BLOCKS
Blocking to prevent movement of mains under pressure at bends and fittings shall be Portland Cement Concrete (PCC), a minimum of 12–inches thick pre–cast blocks, placed between solid ground and the fittings in such a manner that pipe fittings and joints will be accessible for repairs. All bends of 22 ½ degrees or greater, and all tees and plugs shall be thrust protected to prevent movement of the line under pressure. Thrust protection may also be attained by the use of a combination of mechanical retaining glands and threaded stainless steel rods. Wood blocks or shims will not be allowed for thrust blocking.

8.506E – TRENCH
Minimum trench width shall be ample for proper jointing, but in no case less than 1'–6". Bedding and backfill shall be as specified in Section 8.209.

8.507 – CONNECTIONS TO EXISTING MAINS
All connections to the Village water distribution system shall be under full water service pressure. The following specifications shall apply when pressure connections are made to the existing Village distribution system:

A. Tapping Sleeves:
   1. Use two–piece stainless steel bolted sleeve type with mechanical joints, Clow F–5205, or approved equal.
   2. Provide joint accessories.

B. Tapping Valves:
   1. Use fully ported gate valves complying with AWWA C500.
   2. Use mechanical joint type, Clow F–5093, or approved equal.

Tapping valves shall be placed in pre–cast concrete vaults as specified in Section 8.505B and in accordance with the "Pressure Connection" detail. Watermain valves shall not be placed in sidewalks or driveways.

8.508 – WATER SERVICE LINES

A water service line is designed to deliver water from a water main to a single building, extended from the water main to the building, and includes corporation stop, curb stop and service box. Service lines shall be approximately at a right angle to the centerline of the right–of–way whenever possible. The preferred location for the service box is 1 foot outside of the public right of way and not located within any driveways or sidewalks/paths. The service line should be a continuous length of pipe and couplings are not allowed.
Water services to multi–family type units must have the service boxes placed in an appropriately sized cast–in–place Portland Cement concrete box. Said box will be flush to the final grade, with each box identified or stamped in the concrete with a corresponding address for each interior unit.

8.508B – MATERIALS
1. Service lines: Type K soft temper seamless copper water tubing complying with ASTM B–88.
2. Corporation stops: A. Y. McDonald, or approved equal.
3. Curb stops: A. Y. McDonald, or approved equal.
4. Service boxes: Buffalo type, Minneapolis pattern for 1" copper service. Lid marked "Water".
5. All service taps shall be either with a manufactured tap coupling or full stainless steel. For service lines greater than 1 ½ inches in diameter, taps shall be made with a ductile type or stainless steel (full body) tapping sleeve.

8.508C – MINIMUM DIAMETER
No water service line shall be less than 1–inch internal diameter. The Building Department will evaluate appropriate signed/sealed architectural plans to determine if the water service line/meter/valve needs to be increased in size to accommodate the number of proposed plumbing fixtures. For building services greater than 100 feet in length, a larger diameter service may be required in order to maintain adequate service pressure. Couplings are not allowed.

FINAL – FOR BIDDING

NO.	DATE	BY	REVISION DESCRIPTION

HRGreen
ILLINOIS DESIGN FIRM
184.001322
2363 SEQUOIA DRIVE,
SUITE 101
AURORA, IL 60506
PHONE: 630.553.7560
FAX: 630.553.7646

VARIOUS WATER MAIN REPLACEMENT
CLIENT: VILLAGE OF OSWEGO
OSWEGO, IL
FINAL – FOR BIDDING
SPECIFICATIONS AND NOTES CONT.

BAR IS ONE INCH ON OFFICIAL DRAWINGS
0 1"
IF NOT ONE INCH, ADJUST SCALE ACCORDINGLY

DRAWN BY: ELC/SAS
APPROVED: DWS
JOB DATE: 03/05/2020
JOB NO: 180055.03

DRAWING
C–03

J:\2018\180055\180055.03–Various_Residential_Watermain_Replacement_Areas\CAD\Dwgs\C\180055.03–GeneralNotes1.dwg
Xrefs: xg1–1–dh01
2/28/2020 12:06:06 PM

SPECIFICATIONS & GENERAL NOTES CONT.

8.510 – WATER SERVICE LINE PROTECTION
The horizontal and vertical separation between water service lines and all sanitary sewers, storm sewers, or any drain shall be the same as for water mains, as detailed in Section 8.509.

8.511 – TESTING
The following procedures are to be strictly followed by all persons engaged in the pressure testing and/or disinfection of public water distribution mains and private water services 3–inches and larger in diameter. The requirements of these design standards and the requirements of the Illinois Environmental Protection Agency water permit shall be strictly enforced. The contractor is required to provide any and all equipment necessary to complete the pressure testing and/or disinfection of the water mains and services. Prior to any test, the contractor shall arrange with the Village Public Works Department (630) 554–3242 to have the required tests witnessed, and shall give a minimum of two working days advance notice.

The contractor shall not operate any valves in the existing public water supply system. Requests for valve operations are to be made through the Public Works Department. Requests for valve operations shall be made 24 hours prior to any scheduled operations or tests.

8.511A – PRESSURE AND LEAKAGE TESTS
The contractor shall perform a preliminary pressure/leakage test to ensure that all segments of the system meet the pressure/leakage rates as set forth herein. When the contractor has assured himself that the system will meet the required leakage rates, the contractors shall arrange (two working days in advance) witnessing of the pressure test with the Village Public Works Department. The tests shall be conducted as follows:

1. Hydrostatic Test:
   a. Where any section of a water line is provided with concrete thrust blocking for fittings, the hydrostatic tests shall not be made until at least 5 days after installation of the concrete thrust blocking.
   b. Disposal of wastewater from hydrostatic tests, and for disinfection, shall be approved in advance by the Village Public Works Department.
   c. The new water mains and service lines including valves and hydrants shall be subjected to a hydrostatic pressure of 150 psi.
   d. The test pressure shall be held for a duration of two hours without pressure loss or further pressure application.
   e. Each valve shall be opened and closed several times during the test.
   f. Careful examination of exposed pipe, joints, fittings, and valves is required.
   g. Joints showing visible leakage shall be remade or replaced.
   h. Cracked pipe, defective pipe, and cracked or defective joints, fittings, and valves shall be replaced with sound material and the test repeated until results are satisfactory.

8.511B – DISINFECTION
After all mains have been satisfactorily pressure tested and accepted by the Village, the contractor shall proceed to disinfect the main in accordance with AWWA Standard C651. A chlorine concentration during disinfection shall be maintained at a minimum 50 mg/l available chlorine. The chlorinated water shall be retained in the main for a period of at least 24 hours. At the end of the 24–hour period, the treated water shall contain no less than 25 mg/l chlorine throughout the main. The contractor will sample the chlorinated disinfecting solution to assure that these minimums are maintained.

After an applicable retention period, the heavily chlorinated water shall be flushed from the main until the chlorine concentration in the water leaving the main is not higher than that generally prevailing in the system. After final flushing, and as witnessed by the Village Public Works Department, the contractor shall obtain two samples of water from the main for bacteriological testing. For major water main installation, the number of samples may be increased as determined by the Village Public Works Department. A second series of samples shall be collected no less than 24–hours after the first set of samples has been collected. The individual sets of samples shall be bacteriologically tested to show the absence of coliform organisms.

If both sets of samples are satisfactory, the Village Public Works Department shall open all valves on the system. The contractor and the Village will be furnished with copies of the bacteriological report for their records. Only Village Public Works staff is allowed to operate valves.

8.514 – WORKMANSHIP
As a minimum requirement, the specifications for the construction of water distribution facilities shall not be less stringent than the "Standard Specification for Water and Sewer Main Construction in Illinois", adopted by a joint committee of the Illinois Society of Professional Engineers, Consulting Engineers Council of Illinois, Illinois Chapter of the American Public Works Association, Illinois Municipal League, and the Associated General Contractors of Illinois.

SECTION 8.60 – ROADWAYS, SIDEWALKS, AND STREET LIGHTING

8.605 – COMBINATION CONCRETE CURB AND GUTTER
Combination concrete curb and gutter shall be constructed along the edge of all pavement (roadways and parking lots) except as provided in Section 8.210G. Cross section and details for barrier/modified continuously reinforced type curb shall conform to those on the standard details. Material and construction shall conform to the requirements of the "Standard Specifications for Road & Bridge Construction" of the Illinois Department of Transportation for Combination Concrete Curb and Gutter.

Minor repairs to the curb and gutter will be completed with either an epoxy polymer concrete, joint sealer, ("Crown Polymers", or approved equal) or a remove/replace technique at the discretion of the Village Engineer or their representative.

A – STAMP "S" & "W"

Shortly after the concrete curb is poured, the contractor shall mark the curb with an "S" for sewer and a "W" for water to locate the service stubs. The contractor shall provide the stamps.

– PAVEMENT TYPES

– SPECIAL REQUIREMENTS FOR HOT–MIX ASPHALT PAVEMENT

The following qualifications and requirements shall apply to hot–mix asphalt pavements regardless of design method used:

1. No construction required by this Section shall be permitted after November 1 without written authorization of the Village Engineer.
2. Minimum acceptable I. B. R. for sub–grade is 3.0.
3. Where I. B. R. for underlying soil is less than 3.0, it shall be removed or otherwise modified as required to meet this minimum.

8.611A – STRUCTURE ADJUSTMENT

When finished grade or alignment for existing underground structures, such as inlet basins, catch basins, manholes or valve vaults is affected by proposed work, the project drawings shall provide for the adjustment of such structures as required. Where a project is to be constructed under two or more construction contracts, one or more of which includes the construction of pavement, the contract documents for those contracts including paving work shall provide for the adjustment of underground structures that may be constructed under other contracts as may be required to fit the proposed pavement.

8.611B – UTILITY CROSSING PROTECTION
All trenches that either cross or are within 2 feet of the street pavement, sidewalk, curb and gutter and driveways shall consist of mechanically compacted CA–7 with a 12 inch thick, mechanically compacted CA–6 cap. The select granular backfill shall be mechanically compacted according to the Standard Specifications for Water and Sewer Main Construction in Illinois.

8.612 – DRIVEWAYS AND APPROACHES
8.612C – MATERIALS
Material and construction of driveways and approaches in urbanized areas shall conform to the requirements of the "Standard Specifications for Road and Bridge Construction" of the Illinois Department of Transportation for PCC driveway pavement. PCC driveways and approaches in residential areas shall be a minimum of 5–inches thick on a minimum of 4–inches of compacted CA–6 crushed stone. PCC driveways and approaches in non–residential areas shall be a minimum of 8–inches thick on a minimum of 6–inches of compacted CA–6 crushed stone. Crushed stone base compaction shall equal or exceed 90 percent of maximum dry density.

Bituminous driveways and approaches in residential areas shall be a minimum of three (3") inches of hot–mix asphalt surface course, over a compacted stone base of CA–6 at least eight (8") inches thick. Bituminous driveways and approaches in non–residential areas shall be a minimum of four (4") inches of hot–mix asphalt, over a compacted stone base of CA–6 at least twelve (12") inches thick.

Alternate materials of comparable strength may be allowed at the discretion of the Village Engineer.

8.613 – SIDEWALKS
Sidewalks shall be required in all appropriate zoning districts as specified in Figure 1. As a minimum requirement, the specifications for the construction of sidewalk facilities shall be no less stringent than the requirements set out in the following sections. Valve vaults, b–boxes, or manholes are not allowed in sidewalks.

8.613B – SPECIFICATIONS
All sidewalks shall be a minimum of 5–inches thick. Sidewalks shall be continuous through residential driveways with a minimum thickness of 6–inches through the driveway section. Sidewalks in non–residential areas shall be a minimum of 5–inches thick, except it shall be a minimum of 8–inches thick through non–residential driveways. Sidewalk width shall be as specified in Figure 1 or as determined by the Village Engineer when a greater width is justified on the basis of anticipated traffic.

8.613C – MATERIALS
All materials shall meet the requirements of the "Standard Specifications for Road and Bridge Construction" of the Illinois Department of Transportation. All sidewalks shall be constructed of Portland Cement Concrete. Concrete shall be at least a 6 bag mix, 4 percent to 6 percent air– entrained, and shall have a slump of not less than 2–inches or more than 4–inches. Sidewalk shall be placed on a minimum of 4–inches of compacted CA–7 crushed stone.

8.613F – PLACING AND FINISHING
The sub–grade shall be adequately moistened before placement. The concrete shall be thoroughly spaded along the edges, struck off to the true grade, and finished to a true and even surface. The surface shall be divided by grooves constructed at right angles to the centerline of the sidewalk and shall have rounded edges. No slab shall be longer than 6 feet or less than 4 feet unless otherwise approved by the Village Engineer. The side edges of the walk shall also have rounded edges. The surface shall be "broom" finished.

8.613G – EXPANSION JOINTS
Pre–molded bituminous expansion joints one–half (1/2) inch thick shall be placed every 50 feet minimum and between the sidewalk and all driveways, approaches and curbs, and all structures such as light standards, traffic standards, and traffic poles which extend through the sidewalk.

8.613H – HANDICAPPED REQUIREMENTS
All sidewalk construction intersecting public or private roadways shall be ramped to meet a depressed curb and gutter section in conformance with the Illinois Accessibility Code and the Illinois Americans with Disabilities Act, as amended. The tactile warning surface panel supplied by "Detectable Warning Systems" (or approved equal) will consist of a composite material that is colorfast and UV stable with appropriate raised truncated domes. The color of the panel will be uniform throughout and should not rely on any type of paint coating to achieve color stability. The panel color will be selected by the Director of Public Works. The panels should be sufficiently anchored to allow for easy removal without breaking the concrete. Red dyed Portland Cement Concrete or cast iron panels will not be allowed.

8.614 – GENERAL CONSTRUCTION REQUIREMENTS FOR PCC DRIVEWAYS, APPROACHES, AND SIDEWALKS

8.614A – SUB–GRADE PREPARATION
When the sub–grade has been prepared and no later than 24–hours prior to placing concrete, the contractor shall notify the Village Inspector that forms are in place and the sub–grade is ready for inspection. Sub–grade compaction tests at the Owner/Developer's expense, may be required where deemed appropriate by the Village Inspector. No concrete shall be placed until the sub– grade and forms have been inspected and approved in writing by the Village Inspector.

8.614B – PLACING AND FINISHING
All forms shall be set true to line and elevation, substantially built and rigidly braced to prevent bulging. Forms shall be constructed of steel or clean lumber surfaced on four (4) sides and be uniform in width and thickness. Final surfaces shall have an appropriate sealant applied in accordance with State "Standard Specifications".

All concrete surfaces shall have a light broom finish. 8.614C – PROTECTION AND CURING
All exposed surfaces of concrete shall be protected against rain. The concrete shall be cured for a minimum period of three days after placing by one of the following methods:

- Wet burlap
- Impervious paper
- Membrane curing compound

When the temperature of the air is expected to drop below 40 degrees F within 24–hours after placing, the concrete shall be protected with 9–inches of loose, dry straw and a layer of burlap, or other acceptable material, for a period of at least five days.

8.614D – COLD WEATHER REQUIREMENTS
No concrete shall be placed when the air temperature is below 40 degrees F or is between 40 degrees and 45 degrees F and falling unless approved by the Village Engineer. The temperature of the concrete when placed shall not be less than 50 degrees F. In no case shall concrete be placed on frozen sub–grade.

8.616A – SODDING/SEEDING
All unpaved areas in any residential development within a street right of way and all swales forming the drainage system for a development shall be sodded. Said sodded areas shall be watered in accordance with applicable IDOT standards. In all commercial, office and industrial developments, an approved water supply for maintaining adequate moisture levels in the parkways shall be provided within at least one hundred (100') feet of all points within the parkway. The Village Engineer may allow parkway seeding with an approved sprinkler system in the parkway in a commercial, office, or industrial development. Upon recommendation of the Village Engineer, the Village Board may require additional seeding of a lot to prevent soil erosion and blockage of drainage systems. A guarantee of a minimum of two (2) growing seasons shall cover all sodded/seeded areas. For purposes of this section, a growing season is May 15th through October.

MISCELLANEOUS NOTES

1. The Contractor shall notify the VILLAGE OF OSWEGO and the residents within the project limits a minimum of 48 hours prior to the start of construction.

   During construction, the contractor shall provide access to all abutting properties, except for periods of short duration as approved by the Owner. Any roadway or access closures shall only take place between the hours of 10:00 a.m. and 3:00 p.m. The VILLAGE OF OSWEGO shall be notified 24 hours in advance of any closures. This Work shall be included and paid for as "Traffic Control and Protection."

   All Work performed relative to this improvement shall comply with all applicable rules and regulations of O.S.H.A.

   All construction personnel will be required to wear a safety vest, complying with the latest O.S.H.A. requirements, at all times while at the construction site. Compliance with this requirement shall be considered as incidental to the contract.

   All trenches shall be backfilled or covered at the end of each day of construction.

   The Contractor shall remove all mailboxes within the Limits of Construction which interfere with construction operations and erect them at temporary locations as approved by the Owner. As soon as construction operation permits, the Contractor shall set the mailboxes at their permanent locations. This Work shall be performed as directed by the Owner. The Contractor shall replace, at his/her expense, any mailbox or post which has been damaged during construction. No additional compensation shall be allowed.

2. Easements for the existing utilities, both public and private, and utilities within public rights–of–way are shown on the plans according to available records. The Contractor shall be responsible for determining the exact location in the field of these utility lines and their protection from damage due to construction operations. If existing utility lines of any nature are encountered which conflict in location with new construction, the Contractor shall notify the Engineer so that the conflict may be resolved.

3. Contractor shall be responsible for securing all Permits including municipal permits.

4. Construction Observation: All improvements shall be subject to inspection by a duly authorized and qualified Village inspector both during the course of construction and after construction is complete. The Contractor shall provide for reasonable tests and proof of quality of materials as requested by the inspector. Inspector shall have forty–eight (48) hours notice prior to construction.

   A. To visit the construction site in order to better carry out the duties and responsibilities assigned by the Village and undertaken by the Inspector;

   B. The Inspector shall not, during such visits or as a result of such observations of the Contractor's Work in progress, supervise, direct, nor shall the inspector have the authority over the responsibility for the means, methods, techniques, sequences, or procedures of construction selected by the Contractor, for safety precautions and programs incidental to the Work of the Contractor, or for any failure of the Contractor to comply with laws, rules, regulations, ordinances, codes or orders applicable to the Contractor furnishing and performing his Work. Accordingly, the Inspector can neither guarantee the performance of the construction contracts by the Contractor nor assume responsibility for the Contractor's failure to furnish and perform his Work in accordance with the Contract Documents.

5. Excavation: Where Working conditions and right–of–way permit, pipe line trenches with sloping sides may be used.

   The slopes shall not extend below the top of the pipe, and trench excavations below this point shall be made with vertical sides with widths not exceeding those specified herein for the various sizes of pipe.

   Open–cut trenches shall be sheeted and braced as required by the governing State and Federal laws and Municipal ordinances, and as may be necessary to protect life, property, or the Work.

   Where firm foundation is not encountered at the grade established due to unsuitable soil, all such unsuitable material shall be removed and replaced with approved compacted granular material.

6. Utilities: The Contractor shall notify all utilities prior to the installation of any pipe lines. Where conflict exists between underground utilities and the proposed underground piping requiring a revision to the plans, such construction shall not be undertaken until such changes are approved by the Village Engineer in writing.

7. Field Tile: The Engineer and VILLAGE OF OSWEGO Public Works shall be notified if, during construction, any buried field tiles are exposed or disturbed. The Contractor shall reconnect said field tiles if deemed necessary.

8. The Contractor shall be responsible for the installation and maintenance of adequate signs, traffic control devices, and warning devices to inform and protect the public during all phases of construction.

9. Rubbish Removal: Contractor shall make site inspection prior to bidding and shall include in proposal removal of stumps, brush, branches, etc. All material shall be disposed of off–site at the Contractor's expense.

10. Water Use: Contractor shall supply any water required for construction. Water is available from hydrants only with prior approval from public works and a representative from public works onsite at time of connection. Secure permission from water utilities, obtain necessary permits, and notify Engineer, Owner and Fire Department before obtaining water from fire hydrants. Make arrangements for connecting to hydrants, and for temporary piping required to transport water to point of use. Connection to hydrants shall prevent backflow to system. Use only special hydrant operating wrenches to open hydrants.

11. The Contractor shall indemnify and hold harmless the Village and Village's Engineers and their agents and employees from and against all claims, damages, losses and expenses, including attorney's fees arising out of or resulting from the performance of the Contractor's Work. In any and all claims against the Village or its employees, by any employee of the Contractor, or anyone directly or indirectly employed by the Contractor, or anyone for whose acts the Contractor may be liable, the indemnification obligation shall not be limited in any way by any limitation on the amount of damages, compensation or benefits payable by or for the Contractor under Workmen's Compensation acts, disability benefit acts or other employee benefit acts.

12. **No construction plans shall be used for construction unless specifically marked "For Construction." Prior to commencement of construction, the Contractor shall verify all dimensions and conditions affecting their Work with the actual conditions at the job site. In addition, the Contractor must verify the line and grade stakes against the construction plans. If there are any discrepancies from what is shown on the construction plans, he must immediately report the same to the Engineer before doing any Work, otherwise the Contractor assumes full responsibility. In the event of disagreement between the construction plans, Standard Specifications and/or special details, the Contractor shall secure written instructions from the Engineer prior to proceeding with any part of the Work affected by omissions or discrepancies. Failing to secure such instructions, the Contractor will be considered to have proceeded at his own risk and expense. In the event of any doubt or question rising with respect to the true meaning of the construction plans or specifications, the decision of the Engineer shall be final and conclusive.**

13. Restoration of Drainage: As soon as possible after backfilling the trench, all ditching, grading and shaping necessary to restore the original drainage in the area of Work shall be performed. Culverts removed during the course of the Work shall be replaced as soon as practicable.

    Adequate temporary drainage facilities meeting the approval of the Engineer shall be provided during construction.

14. Erosion Control: It shall be the Contractor's responsibility to properly control erosion on the jobsite. Any siltation of conduits, structures, or ditches shall be cleaned and maintained by the Contractor until the seeding has taken hold. All washouts, gullies, etc. will be regraded and reseeded by the Contractor.

    The Contractor's responsibility for erosion control shall extend throughout the construction process. The Contractor shall be responsible for clean–up of paved surfaces within and adjacent to the project on a timely basis and/or at the direction of the Village Engineer.

    All construction will adhere to the requirements set forth in the IEPA's General NPDES Permit for Stormwater Discharge from construction site activities.

    Erosion control items must be inspected weekly and after every rain storm event of one–half inch of rainfall or greater. Any repairs needed to ensure or replacement adequate erosion control must be made immediately by the contractor.

15. Removal of Water: Contractors shall, at all times during construction, provide and maintain ample means and devices with which to remove and properly dispose of all water entering the excavations. No sanitary sewer shall be used for disposal of trench water.

    The Contractor shall be responsible for complying with all Federal, State and Local regulatory requirements.

FINAL – FOR BIDDING

NO.	DATE	BY	REVISION DESCRIPTION

ILLINOIS DESIGN FIRM
184.001322
2363 SEQUOIA DRIVE,
SUITE 101
AURORA, IL 60506
PHONE: 630.553.7560
FAX: 630.553.7646
HRGreen

VARIOUS WATER MAIN REPLACEMENT
CLIENT: VILLAGE OF OSWEGO
OSWEGO, IL

FINAL – FOR BIDDING
SPECIFICATIONS AND NOTES CONT.

BAR IS ONE INCH ON OFFICIAL DRAWINGS
0 1"
IF NOT ONE INCH, ADJUST SCALE ACCORDINGLY

DRAWN BY: ELC/SAS
APPROVED: DWS
JOB DATE: 03/05/2020
JOB NO: 180055.03

DRAWING
C–04

J:\2018\180055\180055.03-Various_Residential_Watermain_Replacement_Areas\CAD\Dwgs\C\180055.03-GeneralNotes1.dwg
Xrefs: xgt-1-dh01
2/28/2020 12:06:06 PM

SUMMARY OF QUANTITIES - COMBINED

	ITEM #	PAY ITEM #	PAY ITEM	UNITS	QUANTITY
	1	20101100	TREE TRUNK PROTECTION	EACH	17
	2	20101200	TREE ROOT PRUNING	EACH	17
	3	25000400	NITROGEN FERTILIZER NUTRIENT	POUND	14
	4	25000500	PHOSPHORUS FERTILIZER NUTRIENT	POUND	14
	5	25000600	POTASSIUM FERTILIZER NUTRIENT	POUND	14
	6	20800150	TRENCH BACKFILL	CU YD	600
	7	21101615	TOPSOIL FURNISH AND PLACE, 4"	SQ YD	1,000
*	8	X2130010	EXPLORATION TRENCH, SPECIAL	FOOT	90
	9	25200110	SODDING, SALT TOLERANT	SQ YD	1,000
	10	21400100	GRADING AND SHAPING DITCHES	FOOT	315
*	11	X0326806	WASHOUT BASIN	L SUM	1
	12	28000500	INLET AND PIPE PROTECTION	EACH	4
	13	35101600	AGGREGATE BASE COURSE, TYPE B 4"	SQ YD	528
	14	44000154	HOT-MIX ASPHALT SURFACE REMOVAL, 1 1/4"	SQ YD	3,570
	15	40600290	BITUMINOUS MATERIALS (TACK COAT)	POUND	1,620
	16	40603335	HOT-MIX ASPHALT SURFACE COURSE, MIX "D", N50	TON	309
	17	42400200	PORTLAND CEMENT CONCRETE SIDEWALK 5 INCH	SQ FT	428
*	18	42400800	DETECTABLE WARNINGS	SQ FT	34
*	19	44000200X	DRIVEWAY PAVEMENT REMOVAL AND REPLACEMENT - (HMA)	SQ YD	370
	20	44000500	COMBINATION CURB AND GUTTER REMOVAL	FOOT	407
	21	44000600	SIDEWALK REMOVAL	SQ FT	438
*	22	44201723	CLASS D PATCHES, TYPE IV, 6 INCH	SQ YD	510
	23	50105220	PIPE CULVERT REMOVAL, 12" - CMP	FOOT	76
	24	542D0217	PIPE CULVERTS, CLASS D, TYPE 1 12" - CMP	FOOT	76
*	25	XX008298	DUCTILE IRON WATER MAIN 6" (TREE TUNNELING)	FOOT	40
*	26	56103000	DUCTILE IRON WATER MAIN 6"	FOOT	722
*	27	X0325379	TRENCHLESS PIPE INSTALLATION	FOOT	60
	28	56200300	WATER SERVICE LINE 1"	FOOT	770
*	29	X5610640	PLUG EX WATER MAIN	EACH	2
*	30	56400820	FIRE HYDRANT WITH AUXILIARY VALVE AND VALVE BOX	EACH	3
*	31	X5610656	WATER MAIN TO BE ABANDONED, 6"	FOOT	347
*	32	X60248900	VALVE VAULTS, TYPE A, 5'-DIAMETER, WITH SPECIAL FRAME AND LID	EACH	3
*	33	60500405	FILLING VALVE VAULTS	EACH	2
	34	60603800	COMBINATION CONCRETE CURB AND GUTTER, TYPE B-6.12	FOOT	45
	35	60608572	COMBINATION CONCRETE CURB AND GUTTER, TYPE M-4.18	FOOT	362
*	36	56400500	FIRE HYDRANTS TO BE REMOVED	EACH	1
*	37	Z0044500	PRESSURE CONNECTION 6" X 6"	EACH	1
*	38	Z0044600	PRESSURE CONNECTION 6" X 10"	EACH	1
*	39	Z0045000	PRESSURE CONNECTION 12" X 6"	EACH	1
*	40	Z0013798	CONSTRUCTION LAYOUT	L SUM	1
	41	67100100	MOBILIZATION	L SUM	1
*	42	X0322917	PROPOSED STORM SEWER CONNECTION TO EXISTING MANHOLE	EACH	1
	43	28000305	TEMP DITCH CHECKS	FOOT	75

SUMMARY OF QUANTITIES - SEDGWICK CT.

	ITEM #	PAY ITEM #	PAY ITEM	UNITS	QUANTITY
	1	20101200	TREE ROOT PRUNING	EACH	4
	2	20101100	TREE TRUNK PROTECTION	EACH	4
	3	25000400	NITROGEN FERTILIZER NUTRIENT	POUND	3
	4	25000500	PHOSPHORUS FERTILIZER NUTRIENT	POUND	3
	5	25000600	POTASSIUM FERTILIZER NUTRIENT	POUND	3
	6	21101615	TOPSOIL FURNISH AND PLACE, 4"	SQ YD	170
*	7	X2130010	EXPLORATION TRENCH, SPECIAL	FOOT	30
	8	25200110	SODDING, SALT TOLERANT	SQ YD	170
*	9	X0326806	WASHOUT BASIN	L SUM	0.33
	10	20800150	TRENCH BACKFILL	CU YD	220
	11	35101600	AGGREGATE BASE COURSE, TYPE B 4"	SQ YD	304
*	12	44000200X	DRIVEWAY PAVEMENT REMOVAL AND REPLACEMENT - (HMA)	SQ YD	100
*	13	44201723	CLASS D PATCHES, TYPE IV, 6 INCH	SQ YD	200
*	14	56103000	DUCTILE IRON WATER MAIN 6"	FOOT	174
	15	56200300	WATER SERVICE LINE 1"	FOOT	230
*	16	56400820	FIRE HYDRANT WITH AUXILIARY VALVE AND VALVE BOX	EACH	1
	17	44000500	COMBINATION CURB AND GUTTER REMOVAL	FOOT	151
	18	60608572	COMBINATION CONCRETE CURB AND GUTTER, TYPE M-4.18	FOOT	151
	19	42400200	PORTLAND CEMENT CONCRETE SIDEWALK 5 INCH	SQ FT	270
*	20	42400800	DETECTABLE WARNINGS	SQ FT	16
	21	44000600	SIDEWALK REMOVAL	SQ FT	270
	22	44000154	HOT-MIX ASPHALT SURFACE REMOVAL, 1 1/4"	SQ YD	1,190
	23	40600290	BITUMINOUS MATERIALS (TACK COAT)	POUND	540
	24	40603335	HOT-MIX ASPHALT SURFACE COURSE, MIX "D", N50	TON	103
*	25	Z0044500	PRESSURE CONNECTION 6" X 6"	EACH	1
*	26	X60248900	VALVE VAULTS, TYPE A, 5'-DIAMETER, WITH SPECIAL FRAME AND LID	EACH	1
*	27	60500405	FILLING VALVE VAULTS	EACH	1
*	28	X5610640	PLUG EX WATER MAIN	EACH	1
	29	67100100	MOBILIZATION	L SUM	0.33
*	30	Z0013798	CONSTRUCTION LAYOUT	L SUM	0.33

*= SPECIAL PROVISIONS

SUMMARY OF QUANTITIES - BROCK CT.

	ITEM #	PAY ITEM #	PAY ITEM	UNITS	QUANTITY
	1	20101200	TREE ROOT PRUNING	EACH	6
	2	20101100	TREE TRUNK PROTECTION	EACH	6
	3	25000400	NITROGEN FERTILIZER NUTRIENT	POUND	3
	4	25000500	PHOSPHORUS FERTILIZER NUTRIENT	POUND	3
	5	25000600	POTASSIUM FERTILIZER NUTRIENT	POUND	3
	6	21101615	TOPSOIL FURNISH AND PLACE, 4"	SQ YD	190
*	7	X2130010	EXPLORATION TRENCH, SPECIAL	FOOT	30
	8	25200110	SODDING, SALT TOLERANT	SQ YD	190
*	9	X0326806	WASHOUT BASIN	L SUM	0.33
	10	20800150	TRENCH BACKFILL	CU YD	250
	11	35101600	AGGREGATE BASE COURSE, TYPE B 4"	SQ YD	90
*	12	44000200X	DRIVEWAY PAVEMENT REMOVAL AND REPLACEMENT - (HMA)	SQ YD	70
*	13	44201723	CLASS D PATCHES, TYPE IV, 6 INCH	SQ YD	210
*	14	56103000	DUCTILE IRON WATER MAIN 6"	FOOT	184
	15	56200300	WATER SERVICE LINE 1"	FOOT	270
*	16	56400820	FIRE HYDRANT WITH AUXILIARY VALVE AND VALVE BOX	EACH	1
	17	44000500	COMBINATION CURB AND GUTTER REMOVAL	FOOT	195
	18	60608572	COMBINATION CONCRETE CURB AND GUTTER, TYPE M-4.18	FOOT	195
	19	42400200	PORTLAND CEMENT CONCRETE SIDEWALK 5 INCH	SQ FT	47
*	20	42400800	DETECTABLE WARNINGS	SQ FT	8
	21	44000600	SIDEWALK REMOVAL	SQ FT	47
	22	44000154	HOT-MIX ASPHALT SURFACE REMOVAL, 1 1/4"	SQ YD	1,140
	23	40600290	BITUMINOUS MATERIALS (TACK COAT)	POUND	520
	24	40603335	HOT-MIX ASPHALT SURFACE COURSE, MIX "D", N50	TON	99
*	25	Z0045000	PRESSURE CONNECTION 12" X 6"	EACH	1
*	26	X60248900	VALVE VAULTS, TYPE A, 5'-DIAMETER, WITH SPECIAL FRAME AND LID	EACH	1
*	27	60500405	FILLING VALVE VAULTS	EACH	1
*	28	X5610640	PLUG EX WATER MAIN	EACH	1.0
	29	67100100	MOBILIZATION	L SUM	0.33
	30	Z0013798	CONSTRUCTION LAYOUT	L SUM	0.33

SUMMARY OF QUANTITIES - FARO CT.

	ITEM #	PAY ITEM #	PAY ITEM	UNITS	QUANTITY
	1	20101200	TREE ROOT PRUNING	EACH	7
	2	20101100	TREE TRUNK PROTECTION	EACH	7
	3	25000400	NITROGEN FERTILIZER NUTRIENT	POUND	8
	4	25000500	PHOSPHORUS FERTILIZER NUTRIENT	POUND	8
	5	25000600	POTASSIUM FERTILIZER NUTRIENT	POUND	8
	6	21101615	TOPSOIL FURNISH AND PLACE, 4"	SQ YD	640
*	7	X2130010	EXPLORATION TRENCH, SPECIAL	FOOT	30
	8	28000305	TEMP DITCH CHECKS	FOOT	75
	9	25200110	SODDING, SALT TOLERANT	SQ YD	640
	10	21400100	GRADING AND SHAPING DITCHES	FOOT	315
	11	28000500	INLET AND PIPE PROTECTION	EACH	4.0
*	12	X0326806	WASHOUT BASIN	L SUM	0.3
	13	20800150	TRENCH BACKFILL	CU YD	130
	14	35101600	AGGREGATE BASE COURSE, TYPE B 4"	SQ YD	135
*	15	44000200X	DRIVEWAY PAVEMENT REMOVAL AND REPLACEMENT - (HMA)	SQ YD	200
*	16	44201723	CLASS D PATCHES, TYPE IV, 6 INCH	SQ YD	100
*	17	56103000	DUCTILE IRON WATER MAIN 6"	FOOT	364
	18	56200300	WATER SERVICE LINE 1"	FOOT	270
*	19	XX008298	DUCTILE IRON WATER MAIN 6" (TREE TUNNELING)	FOOT	40
*	20	56400820	FIRE HYDRANT WITH AUXILIARY VALVE AND VALVE BOX	EACH	1
	21	44000500	COMBINATION CURB AND GUTTER REMOVAL	FOOT	61
	22	60603800	COMBINATION CONCRETE CURB AND GUTTER, TYPE B-6.12	FOOT	45
	23	60608572	COMBINATION CONCRETE CURB AND GUTTER, TYPE M-4.18	FOOT	16
*	24	X0325379	TRENCHLESS PIPE INSTALLATION	FOOT	60
	25	42400200	PORTLAND CEMENT CONCRETE SIDEWALK 5 INCH	SQ FT	111
*	26	42400800	DETECTABLE WARNINGS	SQ FT	10
	27	44000600	SIDEWALK REMOVAL	SQ FT	121
*	28	56400500	FIRE HYDRANTS TO BE REMOVED	EACH	1
	29	44000154	HOT-MIX ASPHALT SURFACE REMOVAL, 1 1/4"	SQ YD	1,240
	30	40600290	BITUMINOUS MATERIALS (TACK COAT)	POUND	560
	31	40603335	HOT-MIX ASPHALT SURFACE COURSE, MIX "D", N50	TON	107
	32	50105220	PIPE CULVERT REMOVAL, 12" - CMP	FOOT	76
	33	542D0217	PIPE CULVERTS, CLASS D, TYPE 1 12" - CMP	FOOT	76
*	34	Z0044600	PRESSURE CONNECTION 6" X 10"	EACH	1
*	35	X60248900	VALVE VAULTS, TYPE A, 5'-DIAMETER, WITH SPECIAL FRAME AND LID	EACH	1
*	36	X0322917	PROPOSED STORM SEWER CONNECTION TO EXISTING MANHOLE	EACH	1
	37	67100100	MOBILIZATION	L SUM	0
*	38	X5610656	WATER MAIN TO BE ABANDONED, 6"	FOOT	346.6
*	39	Z0013798	CONSTRUCTION LAYOUT	L SUM	0

SYMBOL LEGEND

EXISTING / PROPOSED

SANITARY MANHOLE
STORM MANHOLE
STORM CATCH BASIN/INLET
INLET
FLARED END SECTION
VALVE VAULT
WATER SERVICE VALVE
WATER B-BOX
INDICATES WATER MAIN LINE STOP
INDICATES PRESSURE VALVE INSERT
CUT AND CAP
FIRE HYDRANT WITH AUXILIARY VALVE
LIGHT POLE
REGULATORY SIGN
UTILITY POLE
UTILITY BOX (GAS ELEC CATV)
MAILBOX
WELL
SANITARY SEWER
STORM SEWER
COMBINATION STORM AND SANITARY SEWER
CULVERT
PERFORATED UNDERDRAIN
WATER MAIN
WATER MAIN ENCASEMENT
TRENCH BACKFILL
SANITARY FORCE MAIN
ELECTRIC LINE
OVERHEAD ELECTRIC LINE
UNDERGROUND ELECTRIC
TELEPHONE LINE
GAS LINE
CABLE TV LINE
FIBER OPTIC LINE
RAILROAD TRACKS
TREE LINE
TREE
CONTOURS
SPOT ELEVATION (EXIST / PROP)
FENCE
WETLAND
MARSH / WETLAND
RIPRAP
DRAINAGE DIRECTION ARROW
DRAINAGE OVERFLOW DIRECTION

STANDARD ABBREVIATIONS

B-B – BACK TO BACK OF CURB
B.C. – BACK OF CURB
B.O.C. – BACK OF CURB
B.S.L. – BUILDING SETBACK LINE
P.S.L. – PARKING SETBACK LINE
C.B. – STORM CATCH BASIN
C.E. – COMMONWEALTH EDISON CO.
D.E. – DRAINAGE EASEMENT
E-E – EDGE TO EDGE OF PAVEMENT
E.O.P. – EDGE OF PAVEMENT
E.O.S. – EDGE OF SHOULDER
E.P. – EDGE OF PAVEMENT
E.S. – EDGE OF SHOULDER
F.E.S. – FLARED END SECTION
I.B.T. – ILLINOIS BELL TELEPHONE CO.
L.E. – LANDSCAPE EASEMENT
M.H. – MANHOLE (TYPE SPECIFIED ON PLANS)
R.C.M.E. – ROAD CONSTRUCTION & MAINTENANCE EASEMENT
R.O.W. – RIGHT OF WAY
S.R.L. – SEPTIC RESTRICTION LINE
T.B.F. – TRENCH BACKFILL
T.C. – TOP OF CURB
T.C.E. – TEMPORARY CONSTRUCTION EASEMENT
T.O.B. – TOP OF BERM
T.O.C. – TOP OF CURB
U.E. – UTILITY EASEMENT
P.S.L. – PARKING SETBACK LINE
P.U.E. –PUBLIC UTILITY EASEMENT
P.G.L. – PROFILE GRADE LINE

FINAL – FOR BIDDING

NO.	DATE	BY	REVISION DESCRIPTION

HRGreen
ILLINOIS DESIGN FIRM # 184.001322
2363 SEQUOIA DRIVE, SUITE 101
AURORA, IL 60506
PHONE: 630.553.7560
FAX: 630.553.7646

VARIOUS WATER MAIN REPLACEMENT
CLIENT: VILLAGE OF OSWEGO
OSWEGO, IL
FINAL – FOR BIDDING
LEGENDS, ABBREVATIONS AND SUMMARY OF QUANTITIES

BAR IS ONE INCH ON OFFICIAL DRAWINGS
0 1"
IF NOT ONE INCH, ADJUST SCALE ACCORDINGLY

DRAWN BY: ELC/SAS
APPROVED: DWS
JOB DATE: 03/05/2020
JOB NO: 180055.03

DRAWING
C-05

J:\2018\180055\180055.03-Various_Residential_Watermain_Replacement_Areas\CAD\Dwgs\C\180055.03-GeneralNotes1.dwg
Xrefs: xgt-1-dh01
2/28/2020 12:06:06 PM

VICINITY MAP
SCALE: 1"=1,000'

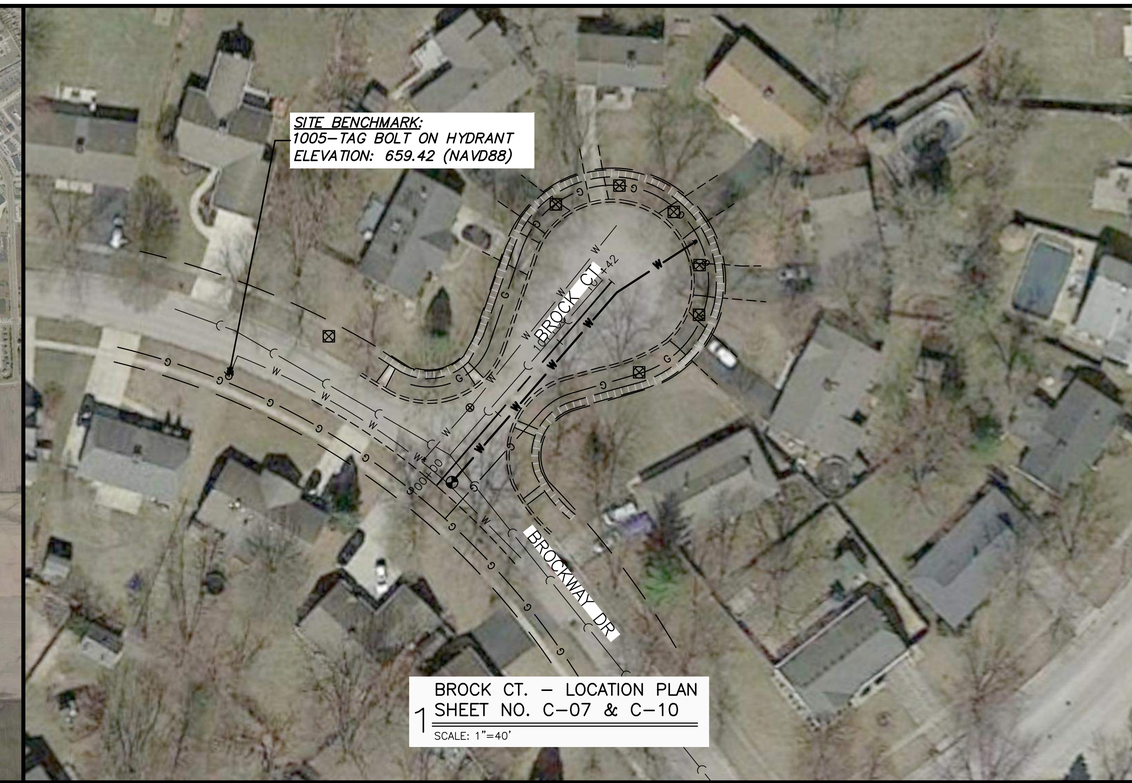

1 BROCK CT. – LOCATION PLAN
SHEET NO. C-07 & C-10
SCALE: 1"=40'

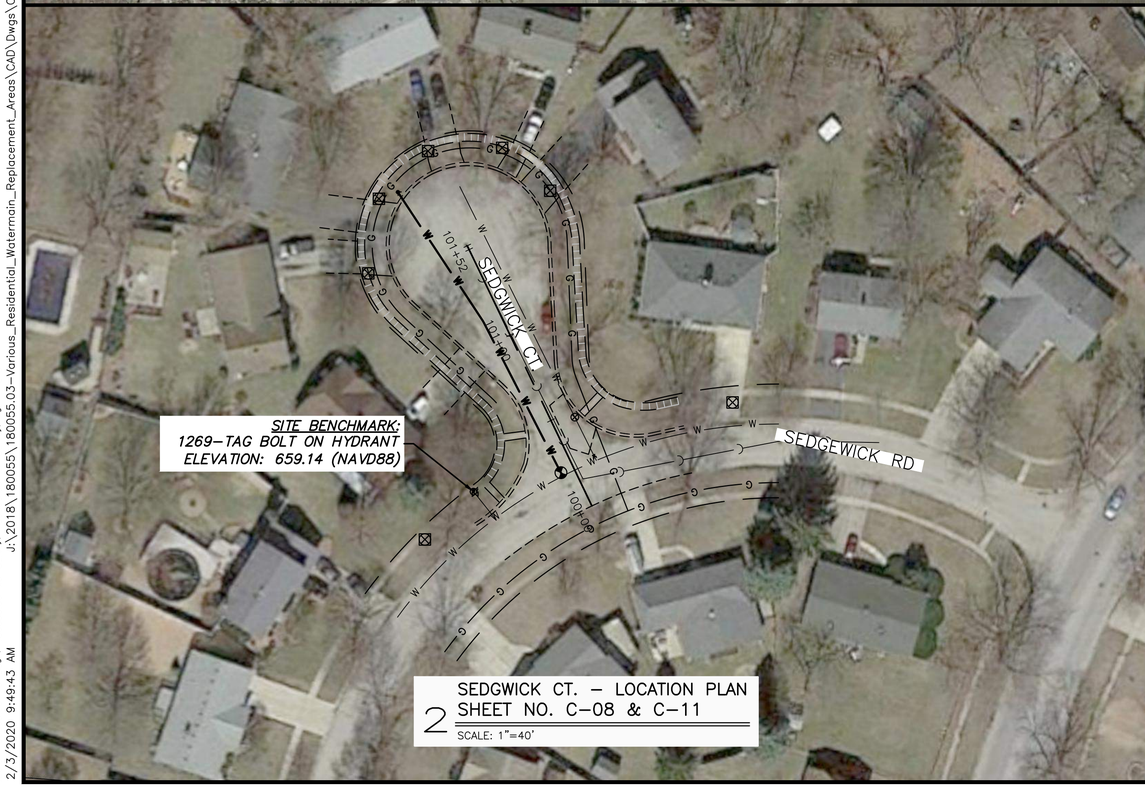

2 SEDGWICK CT. – LOCATION PLAN
SHEET NO. C-08 & C-11
SCALE: 1"=40'

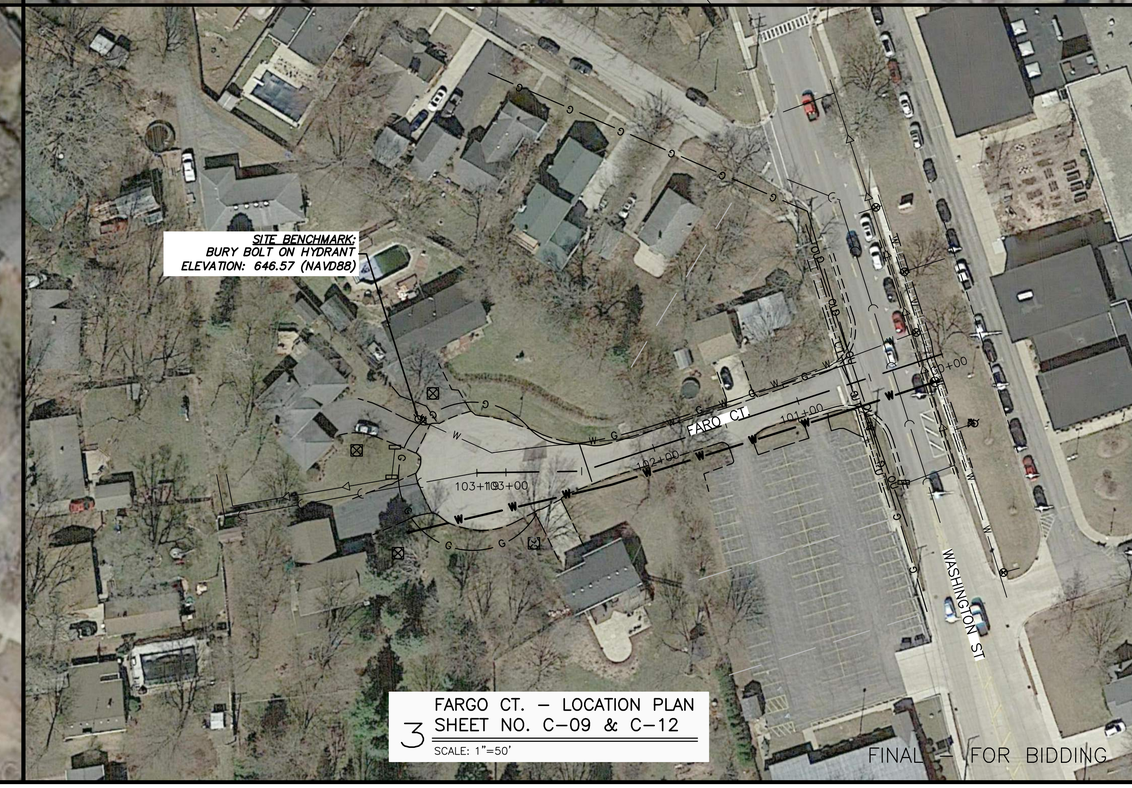

3 FARGO CT. – LOCATION PLAN
SHEET NO. C-09 & C-12
SCALE: 1"=50'

FINAL – FOR BIDDING

NO.	DATE	BY	REVISION DESCRIPTION

HRGreen
ILLINOIS DESIGN FIRM
184.001322
2363 SEQUOIA DRIVE,
SUITE 101
AURORA, IL 60506
PHONE: 630.553.7560
FAX: 630.553.7646

VARIOUS WATER MAIN REPLACEMENT
CLIENT: VILLAGE OF OSWEGO
OSWEGO, IL

FINAL – FOR BIDDING
VICINITY – OVERALL PLANS

BAR IS ONE INCH ON OFFICIAL DRAWINGS
0 1"
IF NOT ONE INCH, ADJUST SCALE ACCORDINGLY

DRAWN BY: ELC/SAS
APPROVED: DWS
JOB DATE: 03/05/2020
JOB NO: 180055.03

DRAWING
C-06

Xrefs: 180055.03-xC-Dsgn; 180055.03-xC-Survey; 180055.03-xV-Survey; xgt-1-dv01
J:\2018\180055\180055.03-Various_Residential_Watermain_Replacement_Areas\CAD\Dwgs\C\180055.03-OverallPlan.dwg
2/3/2020 9:49:43 AM

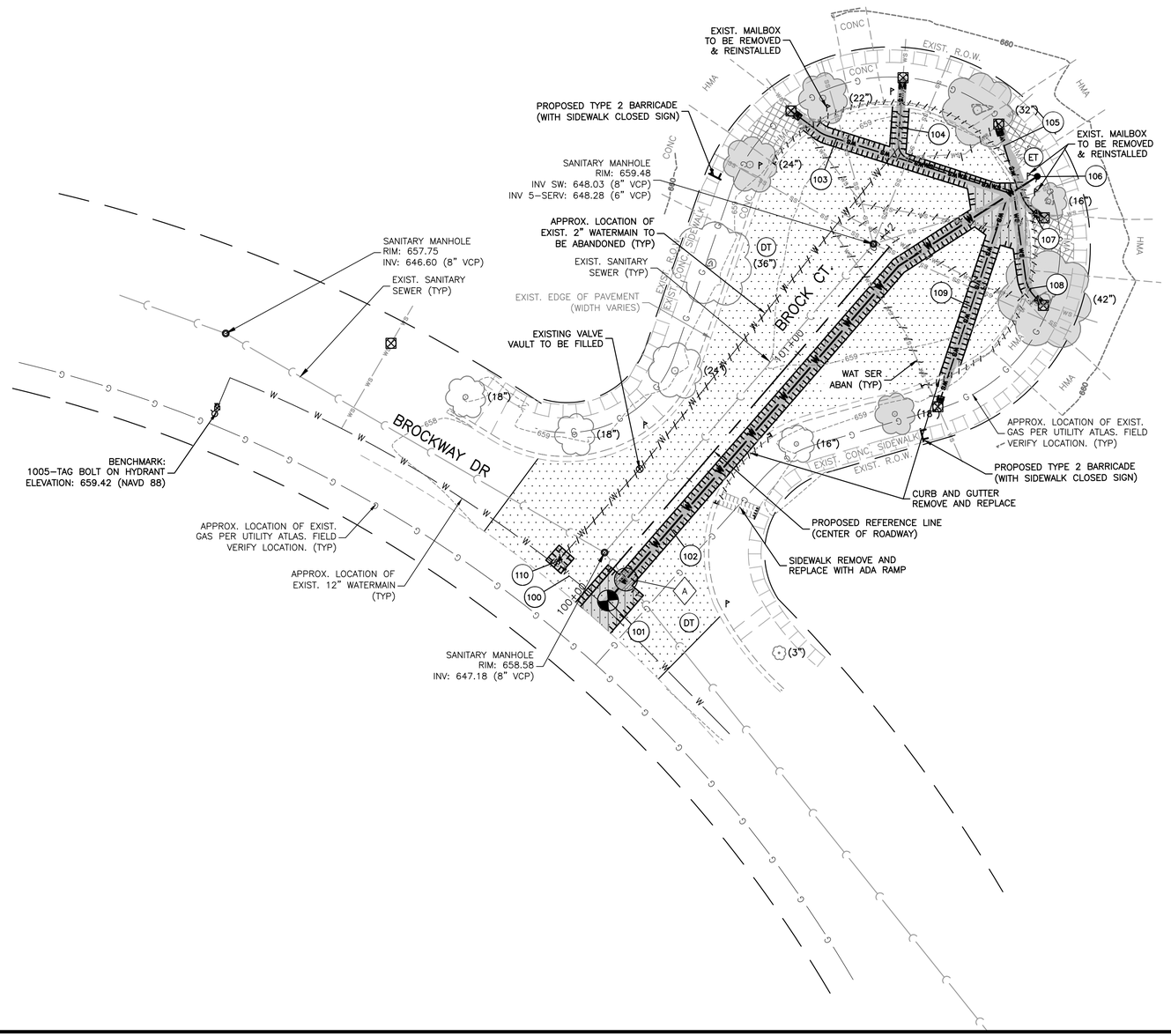

PROJECT LEGENDS:

- INDICATES PAVEMENT REMOVAL (FULL DEPTH)
- INDICATES CLASS D PATCH (SEE SPECS.)
- INDICATES CONCRETE SIDEWALK REMOVAL
- INDICATES HMA DRIVEWAY REMOVAL
- INDICATES HMA SURFACE REMOVAL
- INDICATES SAWCUT (FULL DEPTH)
- INDICATES CURB REMOVAL
- INDICATES PIPE REMOVAL OR ABANDONMENT
- INDICATES SEDIMENTATION / EROSION CONTROL MEASURES (SEE SHEET C-13 – C-14 FOR EROSION CONTROL LEGEND / DETAILS)
- INDICATES TREE TRUNK & ROOT PROTECTION (POTENTIAL ROOT PRUNING REQUIRED) (SEE SHEET C-14 FOR DETAIL)
- # DESIGNATES WATER MAIN TAG
- W DESIGNATES TRENCH BACKFILL

WATERMAIN TAGS

100	EXIST. 12" WATERMAIN (FIELD VERIFY)
101	VV TA 5 DIA W/SPL FR & LID PRESSURE CONNECTION 12"X6" (FIELD VERIFY) RIM = 658.38 (MATCH EXIST.)
102	184 LIN. FT. D I WATER MAIN 6" WITH BENDS
103	71 LIN. FT. WATER SERV LINE 1
104	59 LIN. FT. WATER SERV LINE 1
105	20 LIN. FT. WATER SERV LINE 1
106	FIRE HYD W/AUX V & VB BURY ELEV = 659.58 (MATCH EXIST.)
107	13 LIN. FT. WATER SERV LINE 1
108	36 LIN. FT. WATER SERV LINE 1
109	67 LIN. FT. WATER SERV LINE 1
110	PLUG EX WATER MAIN 2"

CROSSING TAGS

A
WATER MAIN TAG 102
BOP = 652.44
EX. SANITARY SEWER
TOP = 647.89
VERT SEP = 4.55' (NO CONFLICT) (WATER ABOVE)

FINAL – FOR BIDDING

NO.	DATE	BY	REVISION DESCRIPTION

HRGreen
ILLINOIS DESIGN FIRM # 184.001322
2363 SEQUOIA DRIVE, SUITE 101
AURORA, IL 60506
PHONE: 630.553.7560
FAX: 630.553.7646

VARIOUS WATER MAIN REPLACEMENT
CLIENT: VILLAGE OF OSWEGO
OSWEGO, IL

FINAL – FOR BIDDING
BROCK CT. – REMOVAL AND WATER MAIN INSTALLATION PLAN

BAR IS ONE INCH ON OFFICIAL DRAWINGS
0 1"
IF NOT ONE INCH, ADJUST SCALE ACCORDINGLY

DRAWN BY: ELC/SAS
APPROVED: DWS
JOB DATE: 03/05/2020
JOB NO: 180055.03

DRAWING
C-07

Xrefs: 180055.03-xC-Survey; 180055.03-xV-Survey; xgl-1-dx01; 180055.03-xC-Pagn
2/28/2020 12:16:13 PM J:\2018\180055\180055.03-Various_Residential_Watermain_Replacement_Areas\CAD\Dwgs\C\180055.03-Plans.dwg

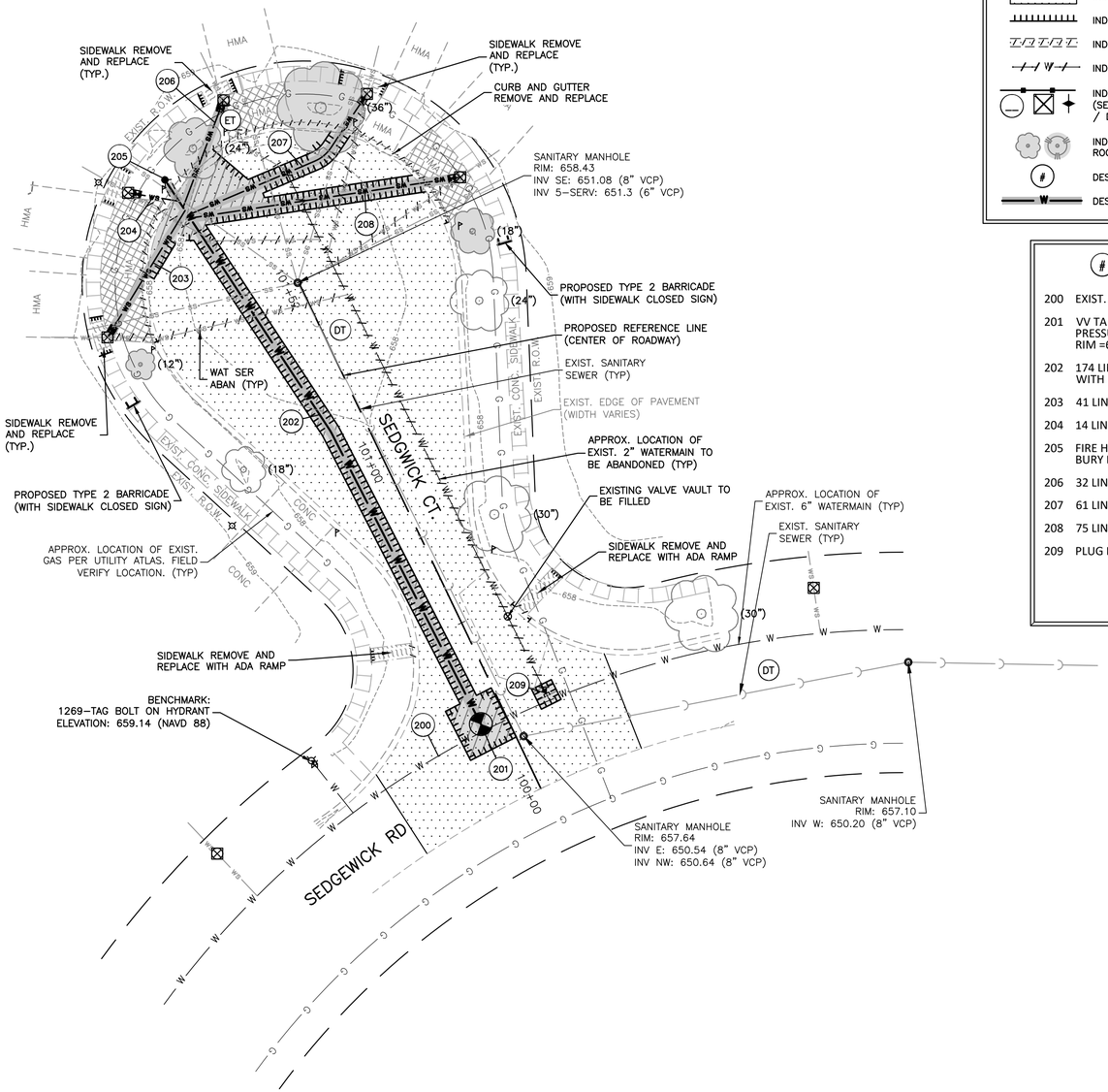

PROJECT LEGENDS:

- INDICATES PAVEMENT REMOVAL (FULL DEPTH)
- INDICATES CLASS D PATCH (SEE SPECS.)
- INDICATES CONCRETE SIDEWALK REMOVAL
- INDICATES HMA DRIVEWAY REMOVAL
- INDICATES HMA SURFACE REMOVAL
- INDICATES SAWCUT (FULL DEPTH)
- INDICATES CURB REMOVAL
- INDICATES PIPE REMOVAL OR ABANDONMENT
- INDICATES SEDIMENTATION / EROSION CONTROL MEASURES (SEE SHEET C-13 – C-14 FOR EROSION CONTROL LEGEND / DETAILS)
- INDICATES TREE TRUNK & ROOT PROTECTION (POTENTIAL ROOT PRUNING REQUIRED) (SEE SHEET C-14 FOR DETAIL)
- # DESIGNATES WATER MAIN TAG
- W DESIGNATES TRENCH BACKFILL

WATERMAIN TAGS

200	EXIST. 6" WATERMAIN (FIELD VERIFY)
201	VV TA 5 DIA W/SPL FR & LID PRESSURE CONNECTION 6"X6" (FIELD VERIFY) RIM =657.53 (MATCH EXIST.)
202	174 LIN. FT. D I WATER MAIN 6" WITH BENDS
203	41 LIN. FT. WATER SERV LINE 1
204	14 LIN. FT. WATER SERV LINE 1
205	FIRE HYD W/AUX V & VB BURY ELEV = 658.53 (MATCH EXIST.)
206	32 LIN. FT. WATER SERV LINE 1
207	61 LIN. FT. WATER SERV LINE 1
208	75 LIN. FT. WATER SERV LINE 1
209	PLUG EX WATER MAIN 2"

FINAL – FOR BIDDING

NO.	DATE	BY	REVISION DESCRIPTION

HRGreen
ILLINOIS DESIGN FIRM # 184.001322
2363 SEQUOIA DRIVE, SUITE 101
AURORA, IL 60506
PHONE: 630.553.7560
FAX: 630.553.7646

VARIOUS WATER MAIN REPLACEMENT
CLIENT: VILLAGE OF OSWEGO
OSWEGO, IL

FINAL – FOR BIDDING
SEDGWICK CT. – REMOVAL AND WATER MAIN INSTALLATION PLAN

BAR IS ONE INCH ON OFFICIAL DRAWINGS
0 1"
IF NOT ONE INCH, ADJUST SCALE ACCORDINGLY

DRAWN BY: ELC/SAS
APPROVED: DWS
JOB DATE: 03/05/2020
JOB NO: 180055.03

DRAWING
C-08

Xrefs: 180055.03-xC-Survey; 180055.03-xV-Survey; xgl-1-dv01; 180055.03-xC-Dsgn
2/28/2020 12:16:13 PM J:\2018\180055\180055.03-Various_Residential_Watermain_Replacement_Areas\CAD\Dwgs\C\180055.03-Plans.dwg

PROJECT LEGENDS:

- INDICATES PAVEMENT REMOVAL (FULL DEPTH)
- INDICATES CLASS D PATCH (SEE SPECS.)
- INDICATES CONCRETE SIDEWALK REMOVAL
- INDICATES HMA DRIVEWAY REMOVAL
- INDICATES HMA SURFACE REMOVAL
- INDICATES SAWCUT (FULL DEPTH)
- INDICATES CURB REMOVAL
- INDICATES PIPE REMOVAL OR ABANDONMENT
- INDICATES SEDIMENTATION / EROSION CONTROL MEASURES (SEE SHEET C-13 – C-14 FOR EROSION CONTROL LEGEND / DETAILS)
- INDICATES TREE TRUNK & ROOT PROTECTION (POTENTIAL ROOT PRUNING REQUIRED) (SEE SHEET C-14 FOR DETAIL)
- DESIGNATES WATER MAIN TAG
- DESIGNATES TRENCH BACKFILL

WATERMAIN TAGS

300 EXIST. 8-10" WATERMAIN (FIELD VERIFY)

301 VV TA 5 DIA W/SPL FR & LID
PRESSURE CONNECTION 6"X10" (FIELD VERIFY)
RIM = 652.60 (MATCH EXIST.)

302 65 LIN. FT. DI WATER MAIN 6"
TRENCHLESS PIPE INSTALLATION
(DIRECTIONALLY DRILLED OR AUGER AND CASED)

303 299 LIN. FT. D I WATER MAIN 6"

304 72 LIN. FT. WATER SERV LINE 1

305 20 LIN. FT. WATER SERV LINE 1

306 FIRE HYD W/AUX V & VB
BURY ELEV = 645.07 (MATCH EXIST.)

307 89 LIN. FT. WATER SERV LINE 1

308 93 LIN. FT. WATER SERV LINE 1

CROSSING TAGS

B
WATER MAIN TAG 302
BOP = 644.96
EX. SANITARY SEWER
TOP = 644.24
VERT SEP = 0.72' (NO CONFLICT)
WATER MAIN LOWERING REQUIRED
WATER MAIN LOWERING PART OF HDD
PROVIDE WM QUALITY CASING – SEAL ENDS

C
EX. STORM SEWER
BOP = 646.96
WATER MAIN TAG 302
TOP = 645.46
VERT SEP = 1.50' (NO CONFLICT)
WATER MAIN LOWERING REQUIRED
WATER MAIN LOWERING PART OF HDD
PROVIDE WM QUALITY CASING – SEAL ENDS

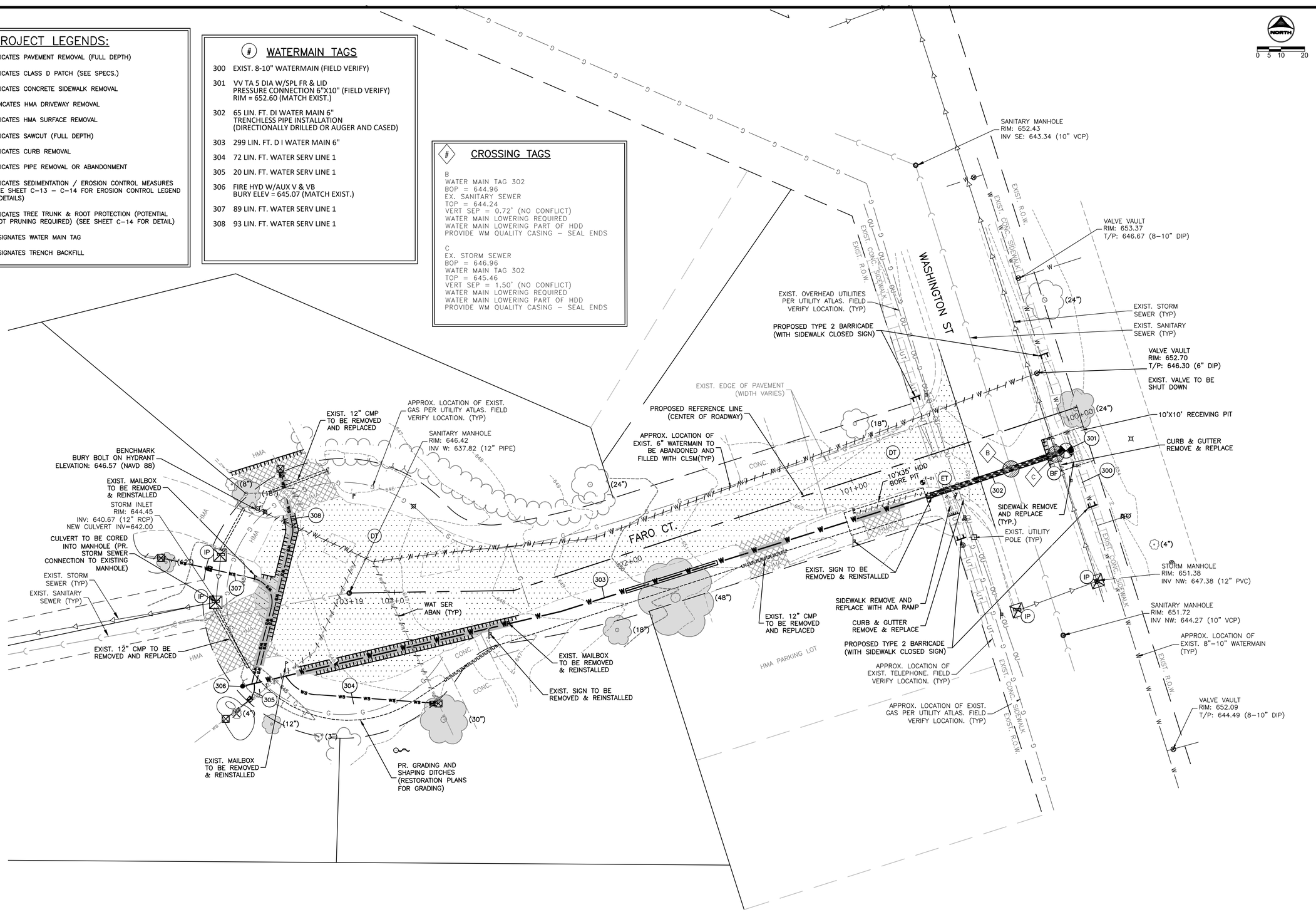

FINAL – FOR BIDDING

NO.	DATE	BY	REVISION DESCRIPTION

ILLINOIS DESIGN FIRM
184.001322
2363 SEQUOIA DRIVE,
SUITE 101
AURORA, IL 60506
PHONE: 630.553.7560
FAX: 630.553.7646
HRGreen

VARIOUS WATER MAIN REPLACEMENT
CLIENT: VILLAGE OF OSWEGO
OSWEGO, IL

FINAL – FOR BIDDING
FARO CT. – REMOVAL AND WATER MAIN INSTALLATION PLAN

BAR IS ONE INCH ON OFFICIAL DRAWINGS
0 1"
IF NOT ONE INCH, ADJUST SCALE ACCORDINGLY

DRAWN BY: ELC/SAS
APPROVED: DWS
JOB DATE: 03/05/2020
JOB NO: 180055.03

DRAWING
C–09

Xrefs: 180055.03-xC-Survey; 180055.03-xV-Survey; xgt-1-dv01; 180055.03-xC-Dsgn
2/28/2020 12:16:13 PM J:\2018\180055\180055.03-Various_Residential_Watermain_Replacement_Areas\CAD\Dwgs\C\180055.03-Plans.dwg

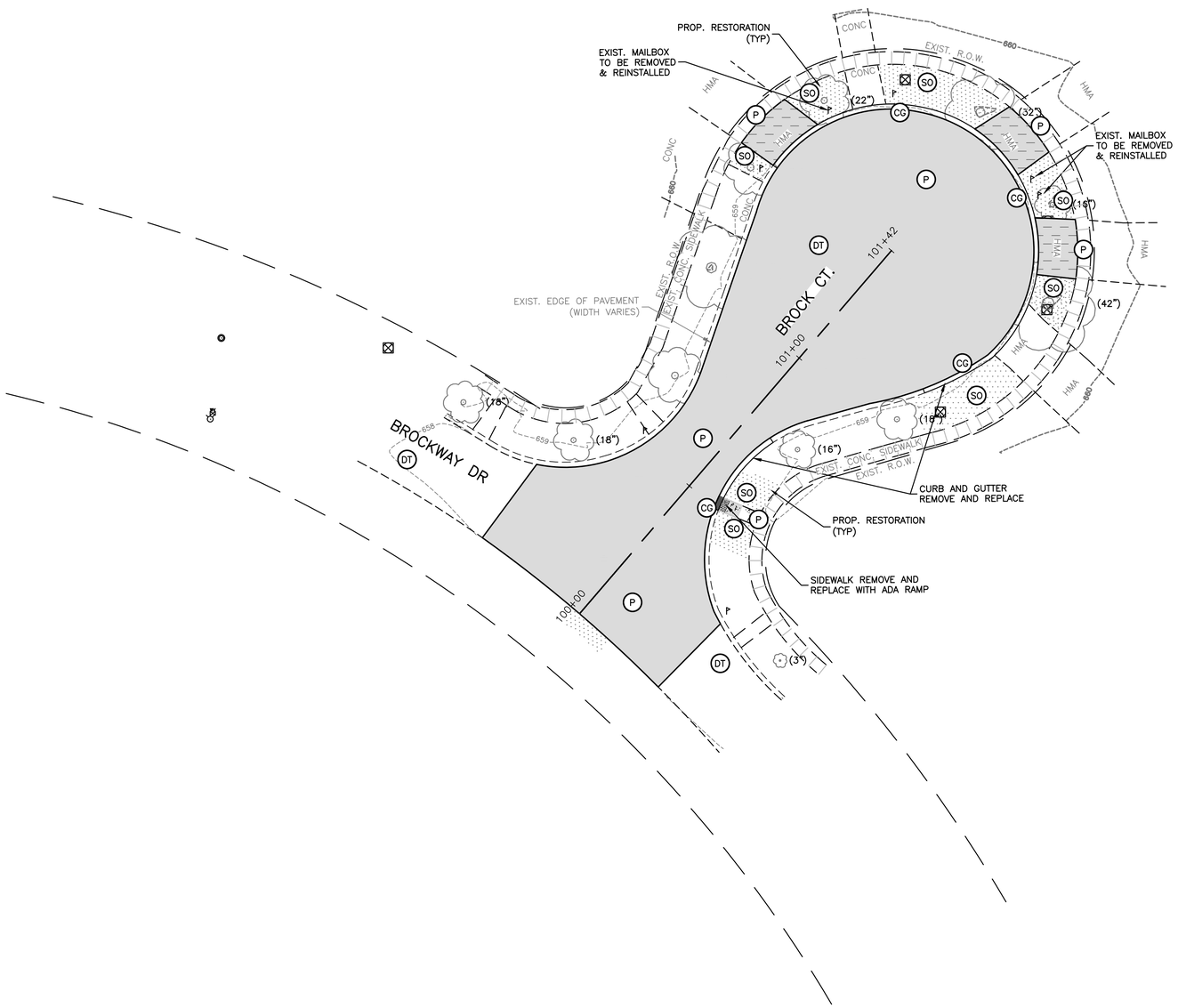

PAVEMENT & RESTORATION PLAN LEGEND:

BF IP DT	INDICATES EROSION CONTROL MEASURES SEE SHEET C-13-C-14 FOR INFO.
SO	INDICATES SODDING, SALT TOLERANT WITH 4" TOPSOIL
P	INDICATES 1-1/2" HMA RESURFACING
P	INDICATES HMA DRIVEWAY REPLACEMENT (SEE DETAIL)
P	INDICATES CONCRETE SIDEWALK REPLACEMENT (SEE DETAIL)
P	INDICATES ADA SIDEWALK RAMP
	INDICATES DETECTABLE WARNING TRUNCATED DOMES
CG	INDICATES CONCRETE CURB & GUTTER
CG	INDICATES DEPRESSED CURB

FINAL – FOR BIDDING

NO.	DATE	BY	REVISION DESCRIPTION

ILLINOIS DESIGN FIRM # 184.001322
2363 SEQUOIA DRIVE, SUITE 101
AURORA, IL 60506
PHONE: 630.553.7560
FAX: 630.553.7646
HRGreen

VARIOUS WATER MAIN REPLACEMENT
CLIENT: VILLAGE OF OSWEGO
OSWEGO, IL

FINAL – FOR BIDDING
BROCK CT. – RESTORATION PLAN

BAR IS ONE INCH ON OFFICIAL DRAWINGS
0 1"
IF NOT ONE INCH, ADJUST SCALE ACCORDINGLY

DRAWN BY: ELC/SAS
APPROVED: DWS
JOB DATE: 03/05/2020
JOB NO: 180055.03

DRAWING
C-10

Xrefs: 180055.03-xC-Survey; 180055.03-xV-Survey; xgt-1-dx01; 180055.03-xC-Dsgn
2/28/2020 12:12:16 PM J:\2018\180055\180055.03-Various_Residential_Watermain_Replacement_Areas\CAD\Dwgs\C\180055.03-RestorationPlans.dwg

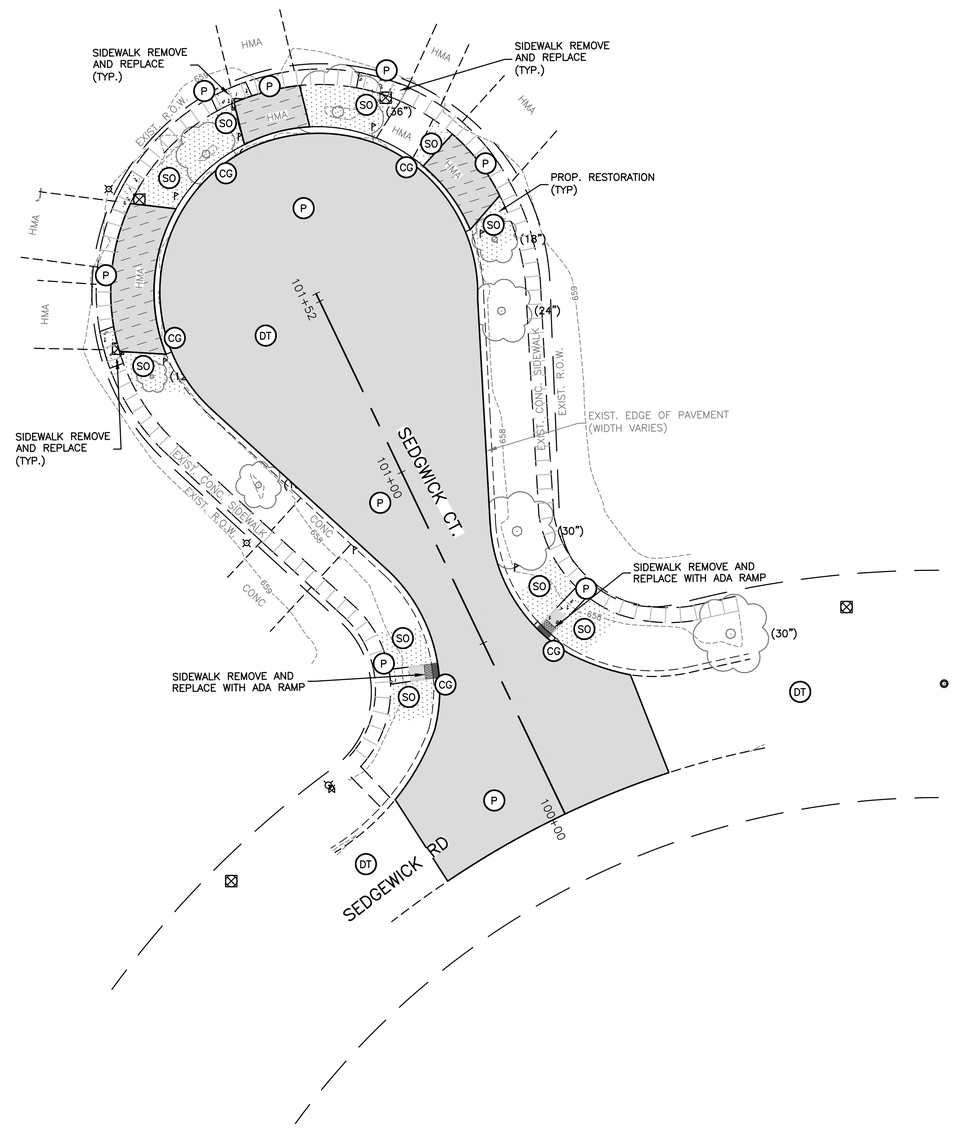

PAVEMENT & RESTORATION PLAN LEGEND:

BF IP DT	INDICATES EROSION CONTROL MEASURES SEE SHEET C-13-C-14 FOR INFO.
SO	INDICATES SODDING, SALT TOLERANT WITH 4" TOPSOIL
P	INDICATES 1-1/2" HMA RESURFACING
P	INDICATES HMA DRIVEWAY REPLACEMENT (SEE DETAIL)
P	INDICATES CONCRETE SIDEWALK REPLACEMENT (SEE DETAIL)
P	INDICATES ADA SIDEWALK RAMP
	INDICATES DETECTABLE WARNING TRUNCATED DOMES
CG	INDICATES CONCRETE CURB & GUTTER
CG	INDICATES DEPRESSED CURB

FINAL – FOR BIDDING

NO.	DATE	BY	REVISION DESCRIPTION

ILLINOIS DESIGN FIRM
184.001322
2363 SEQUOIA DRIVE,
SUITE 101
AURORA, IL 60506
PHONE: 630.553.7560
FAX: 630.553.7646
HRGreen

VARIOUS WATER MAIN REPLACEMENT
CLIENT: VILLAGE OF OSWEGO
OSWEGO, IL

FINAL – FOR BIDDING

SEDGWICK CT.– RESTORATION PLAN

BAR IS ONE INCH ON OFFICIAL DRAWINGS
0 1"
IF NOT ONE INCH, ADJUST SCALE ACCORDINGLY

DRAWN BY: ELC/SAS
APPROVED: DWS
JOB DATE: 03/05/2020
JOB NO: 180055.03

DRAWING
C-11

Xrefs: 180055.03-xC-Survey; 180055.03-xV-Survey; xgt-1-dx01; 180055.03-xC-Dsgn
2/28/2020 12:12:16 PM U:\2018\180055\180055.03-Various_Residential_Watermain_Replacement_Areas\CAD\Dwgs\C\180055.03-RestorationPlans.dwg

PAVEMENT & RESTORATION PLAN LEGEND:

- BF IP DT — INDICATES EROSION CONTROL MEASURES SEE SHEET C-13-C-14 FOR INFO.
- SO — INDICATES SODDING, SALT TOLERANT WITH 4" TOPSOIL
- P — INDICATES 1-1/2" HMA RESURFACING
- P — INDICATES HMA DRIVEWAY REPLACEMENT (SEE DETAIL)
- P — INDICATES CONCRETE SIDEWALK REPLACEMENT (SEE DETAIL)
- P — INDICATES ADA SIDEWALK RAMP
- INDICATES DETECTABLE WARNING TRUNCATED DOMES
- CG — INDICATES CONCRETE CURB & GUTTER
- CG — INDICATES DEPRESSED CURB

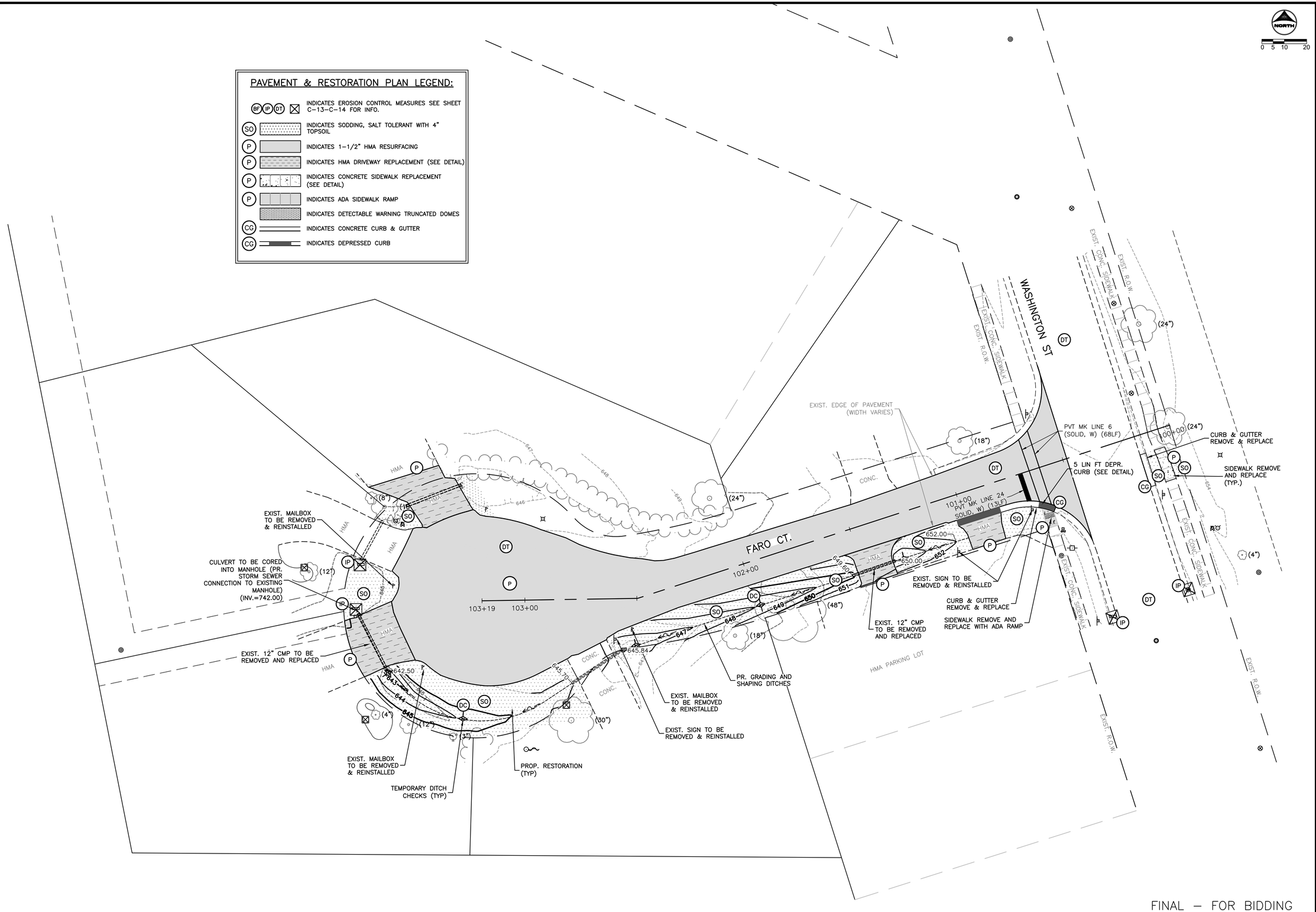

FINAL – FOR BIDDING

NO.	DATE	BY	REVISION DESCRIPTION

HRGreen
ILLINOIS DESIGN FIRM # 184.001322
2363 SEQUOIA DRIVE, SUITE 101
AURORA, IL 60506
PHONE: 630.553.7560
FAX: 630.553.7646

VARIOUS WATER MAIN REPLACEMENT
CLIENT: VILLAGE OF OSWEGO
OSWEGO, IL

FINAL – FOR BIDDING
FARO CT. – RESTORATION PLAN

BAR IS ONE INCH ON OFFICIAL DRAWINGS
0 1"
IF NOT ONE INCH, ADJUST SCALE ACCORDINGLY

DRAWN BY: ELC/SAS
APPROVED: DWS
JOB DATE: 03/05/2020
JOB NO: 180055.03

DRAWING
C-12

Xrefs: 180055.03-xC-Survey; 180055.03-xV-Survey; xgt-1-d001; 180055.03-xC-Dsgn
2/28/2020 12:12:16 PM J:\2018\180055\180055.03-Various_Residential_Watermain_Replacement_Areas\CAD\Dwgs\C\180055.03-RestorationPlans.dwg

CONTROL MEASURE GROUP	CONTROL MEASURE	KEY	APPL.	CONTROL MEASURE CHARACTERISTICS	TEMP.	PERMNT
VEGETATIVE SOIL COVER	TEMPORARY SEEDING	TS	X	PROVIDES QUICK TEMPORARY COVER TO CONTROL EROSION WHEN PERMANENT SEEDING IS NOT DESIRED OR TIME OF YEAR IS INAPPROPRIATE.	X	
	PERMANENT SEEDING	PS		PROVIDES PERMANENT VEGETATIVE COVER TO CONTROL EROSION, FILTERS SEDIMENT FROM WATER. MAY BE PART OF FINAL LANDSCAPE PLAN.		
	DORMANT SEEDING	DS	X	SAME AS PERMANENT SEEDING EXCEPT IS DONE DURING DORMANT SEASON. HIGHER RATES OF SEED APPLICATION ARE REQUIRED.	X	
	SODDING	SO	X	QUICK PERMANENT COVER TO CONTROL EROSION. QUICK WAY TO ESTABLISH VEGETATION FILTER STRIP. CAN BE USED ON STEEP SLOPES OR IN DRAINAGEWAYS WHERE SEEDING MAY BE DIFFICULT.		X
	GROUND COVER	GC		PROVIDES GROUND COVER, SHRUBS AND TREES IN ADDITION TO PERMANENT VEGETATION. MAY BE USED AS PART OF A FINAL LANDSCAPE PLAN ALONG WITH SHRUBS AND TREES.		
	RAIN GARDEN	RG		PROVIDES A TYPE OF FUNCTIONAL LANDSCAPING FEATURE DESIGNED TO CONTROL STORMWATER RUNOFF. SEE LANDSCAPING PLANS FOR DETAILS		
NON VEGETATIVE SOIL COVER	MULCHING	M		ADDED INSURANCE OF A SUCCESSFUL TEMPORARY OR PERMANENT SEEDING. CONTROLS UNWANTED VEGETATION AND PRESERVES MOISTURE. PROVIDES COVER WHERE VEGETATION CANNOT BE ESTABLISHED.		
	AGGREGATE COVER	AG		PROVIDES SOIL COVER ON ROADS AND PARKING LOTS AND AREAS WHERE VEGETATION CANNOT BE ESTABLISHED. PREVENTS MUD FROM BEING PICKED UP AND TRANSPORTED OFF-SITE.		
	PAVING	P	X	PROVIDES PERMANENT COVER ON PARKING LOTS AND ROADS OR OTHER AREAS WHERE VEGETATION CANNOT BE ESTABLISHED.		X
	EROSION BLANKET	EB		PROVIDES QUICK TEMPORARY COVER TO CONTROL EROSION WHEN PERMANENT SEEDING TIME OF YEAR IS INAPPROPRIATE AND IN SLOPED AREAS.		
DIVERSIONS	RIDGE DIVERSION	RD		TYPICALLY USED ABOVE SLOPES. USED WHERE AN EXCESS OF SOIL IS AVAILABLE.		
	CHANNEL DIVERSION	CD		TYPICALLY USED AT TOP OR BASE OF SLOPES. USED WHEN EXCESS SOIL IS NOT AVAILABLE.		
	COMBINATION DIVERSION	CBD		TYPICALLY USED ANYWHERE ONA SLOPE. SOIL TAKEN OUT OF CHANNEL IS USED TO BUILD THE RIDGE.		
	CURB AND GUTTER	CG	X	SPECIAL CASE OF DIVERSION USED IN CONJUNCTION WITH A STREET TO DIVERT WATER FROM AN AREA NEEDING PROTECTION.		X
	BENCHES	B		SPECIAL CASE OF DIVERSION CONSTRUCTED WHEN WORKING ON CUT SLOPES TO SHORTEN LENGTH OF SLOPE AND ADD SLOPE STABILITY.		
WATERWAYS	BARE CHANNEL	BC		PROVIDES MEANS OF CONVEYING RUNOFF TO DESIRED LOCATION. MAY BE USED TO DRAIN DEPRESSIONAL AREAS. ONLY APPLICABLE WHEN VELOCITY OF FLOW IS VERY LOW.		
	VEGETATIVE CHANNEL	VC		PROVIDED ADDED STABILITY TO CHANNEL. USED WHEN VELOCITY OF FLOW IS NOT EXTREMELY FAST.		
	LINED CHANNEL	LC		USED WHEN VEGETATION WILL NOT PROTECT THE CHANNEL AGAINST HIGH VELOCITIES OF FLOW OR WHERE VEGETATION CANNOT BE ESTABLISHED.		
	DITCH CHECKS	DC	X	PROVIDES AN ENERGY DISSIPATOR ALONG A LENGTHY CHANNEL TO REDUCE VELOCITY OF STORMWATER	X	
ENCLOSED DRAINAGE	STORM SEWER	ST	X	CAN BE USED TO CONVEY SEDIMENT LADEN WATER TO SEDIMENT BASIN OR IN CONJUNCTION WITH A WATERWAY.		X
	UNDERDRAIN	UD		USED TO LOWER WATER TABLE AND INTERCEPT GROUNDWATER FOR BETTER VEGETATION GROWTH AND SLOPE STABILITY. USED TO CARRY BASE FLOW IN WATERWAYS AND TO DEWATER SEDIMENT BASINS.		
SPILLWAYS	STRAIGHT PIPE SPILLWAY	SS		USED FOR RELATIVELY SMALL VERTICAL DROPS AND SMALL FLOWS OF WATER		
	DROP INLET PIPE SPILLWAY	DIS		SAME AS PIPE SPILLWAY EXCEPT LARGER FLOWS AND LARGE VERTICAL DROPS CAN BE ACCOMMODATED.		
	WEIR SPILLWAY	W		USED FOR RELATIVELY SMALL VERTICAL DROPS AND FLOWS MUCH GREATER THAN PIPE STRUCTURES.		
	BOX INLET WEIR SPILLWAY	BS		SAME AS WEIR SPILLWAY EXCEPT LARGER FLOWS CAN BE ACCOMMODATED BECAUSE OF LOWER WEIR LENGTH.		
OUTLETS	LINED APRON	LA		PROTECTS DOWNSTREAM CHANNEL FROM HIGH VELOCITY OF FLOW DISCHARGING FROM STRUCTURES.		
	STONE RIP RAP	RR		USED AS AN ENERGY DISSAPATOR AT OUTLET STRUCTURES TO REDUCE VELOCITIES		
SEDIMENT BASINS	EMBANKMENT SEDIMENT BASIN	ES		USED WHERE TOPOGRAPHY LENDS ITSELF TO CONSTRUCTING A DAM AND EARTH FILL IS AVAILABLE.		
	EXCAVATED SEDIMENT BASIN	XS		USED WHERE EMBANKMENT COULD CAUSE A HAZARD DOWNSTREAM IN CASE OF FAILURE AND WHEN EXCESS EARTH FILL IS NOT AVAILABLE.		
	COMBINATION SEDIMENT BASIN	CS		USED WHEN TOPOGRAPHY IS SUITABLE BUT ADDITIONAL CAPACITY IS NEEDED.		
SEDIMENT FILTERS	BARRIER FILTER (SILT FENCE)	BF	X	A TEMPORARY BARRIER OF ENTRENCHED GEOTEXTILE FABRIC (FILTER FABRIC) STRETCHED ACROSS AND ATTACHED TO SUPPORTING POSTS USED TO INTERCEPT SEDIMENT LADEN RUNOFF FROM SMALL DRAINAGE AREAS OF DISTURBED SOIL.	X	
	VEGETATIVE FILTER	VF		USED ALONG DRAINAGEWAYS OR PROPERTY LINES TO FILTER SEDIMENT FROM RUNOFF. SIZE MUST BE INCREASED IN PROPORTION TO DRAINAGE AREA.		
	INLET PROTECTION	IP	X	USED FOR FILTERING SEDIMENT WITHIN GRASS AREAS BEFORE WATER ENTERS THE STORM SEWER	X	
	FILTER BASKET	FB		USED FOR FILTERING SEDIMENT WITHIN THE ROADWAY BEFORE ENTERING THE STORM SEWER		
MUD AND DUST CONTROL	STABILIZED CONST. ENTRANCE	SE		A STABILIZED PAD OF AGGREGATE UNDERLAIN WITH FILTER FABRIC LOCATED AT ANY POINT WHERE TRAFFIC WILL BE ENTERING OR LEAVING A CONSTRUCTION SITE TO OR FROM A PUBLIC RIGHT-OF-WAY, STREET, ALLEY, SIDEWALK, OR PARKING AREA TO PREVENT MUD FROM BEING PICKED UP AND CARRIED OFF-SITE.		
	CONSTRUCTION ROAD STABILIZATION	CRS		THE STABILIZATION OF TEMPORARY CONSTRUCTION ACCESS ROUTES, SUBDIVISION ROADS, ON-SITE VEHICLE TRANSPORTATION ROUTES, AND CONSTRUCTION PARKING AREAS WITH STONE IMMEDIATELY AFTER GRADING TO PREVENT MUD FROM BEING PICKED UP AND CARRIED OFF-SITE.		
	DUST AND TRAFFIC CONTROL	DT	X	CONTROL OF DUST BLOWING AND MOVEMENT ON CONSTRUCTION SITES AND ROADS	X	
	EXPLORATORY TRENCH	ET	X	EXPLORATORY TRENCH EXCAVATION FOR EXISTING UTILITIES	X	

SEEDING / SODDING CHART

STABILIZATION TYPE	CONTRACTOR RESPONSIBILITY JAN.	FEB.	MAR.	PER I.D.O.T. SPECIFICATIONS APR. 1 – JUNE 15 APR.	MAY	JUNE	CONTRACTOR RESPONSIBILITY JULY	PER I.D.O.T. SPECIFICATIONS AUG. 1 – NOV. 1 AUG	SEPT.	OCT.	CONTRACTOR RESPONSIBILITY NOV.	DEC.
* DORMANT SEEDING (135lb/Ac)												
* TEMPORARY SEEDING (100lb/Ac)												
* PERMANENT SEEDING (See IDOT Specs.)						**	**					
* MULCHING (2 Tons/Ac)												
* SODDING (See IDOT Specs.)				PER I.D.O.T. SPECIFICATIONS				PER I.D.O.T. SPECIFICATIONS				

* SEE I.D.O.T SPECIFICATIONS FOR INSTALLATION AND APPLICATION REQUIREMENTS

** SUPPLEMENTAL WATERING MAYBE REQUIRED. (SEE I.D.O.T. SPECIFICATIONS FOR REQUIREMENTS)

EROSION CONTROL NOTES:

- No land disturbing activities shall not commence until approval to do so has been received by governing authorities, in addition to, no land clearing or grading shall begin until all perimeter erosion and sediment control measures have been installed. (including storm water pollution prevention plan per the development criteria.)
- The general contractor shall strictly adhere to the storm water pollution prevention plan (SWPPP) during construction operations. (NO SWPPP IS REQUIRED FOR THIS PROJECT, HOWEVER THE CONTRACTOR SHALL FOLLOW STORM WATER PROTECTION BEST PRACTICES)
- All topsoil shall be stripped prior to filling
- All exposed areas shall be seeded as specified within 14 days of final grading.
- Should construction stop for longer than 14 days, the site shall be seeded as specified.
- Sediment and erosion control measures shall be inspected at least once every seven (7) days and within 24 hours of a rainfall exceeding 0.5 inches during a 24-hour period or more frequently if required by governing NPDES general permit. All maintenance required by inspection shall commence within 24 hours and be completed within 48 hours of report.
- This plan shall not be considered all inclusive as the general contractor shall take all necessary precautions to prevent soil sediment from leaving the site.
- General contractor shall comply with all state and local ordinances that apply.
- Additional erosion and sediment control measures will be installed if deemed necessary by on site inspection.
- If installation of storm drainage system should be interrupted by weather or nightfall, the pipe ends shall be covered with filter fabric.
- General contractor shall be responsible to take whatever means necessary to establish permanent soil stabilization.
- All sedimentation and erosion control regulations shall be adhered to per CRYSTAL LAKE's requirements
- All erosion and sediment control practices shall be maintained and repaired as needed to ensure effective performance of the required erosion control measures.
- All erosion and sediment control work shall conform to the I.D.O.T. Manual for, standards and procedures for erosion control.
- All construction will adhere to the requirements set forth in the IEPA'S new construction site activities national pollutant discharge elimination system (NPDES) storm water permit.
- All roadways shall be cleaned at the end of each construction day.
- All disturbed areas shall be stabilized within 7 days of active disturbance.
- All erosion control measures shall be disposed of within 30 days of final stabilization of the site.
- Ground cover for 5:1 slopes or greater shall be established as soon as possible.
- All disturbed areas to to restored w/ 4" topsoil respread & seeding/sodding unless otherwise noted on plans
- Inlet protection such as Silt filter fabric or filter baskets shall be placed between frame and grate until vegetation is established. (see detail)
- Utilize excelsior blanket on all slopes of 8:1 or greater.
- *Seeding per I.D.O.T. Manual, section 251,standard specifications for road and bridge construction, (latest edition
- *Class 3 type – slope mixture
- *Mulch/hydroseed per I.D.O.T. Manual, section 251, standard specifications for road and bridge construction, (latest edition
- *Mulch/hydroseed method 2, procedure 3
- No dimensions shall be assumed by scaling.
- No known drain tiles are present on the proposed development, if tiles are encountered during construction please notify the engineer immediately.
- No known part of the proposed project is located within a flood hazard 10–100yr area a flood hazard area
- Excess material shall be placed at specified location unless otherwise specified by owner and approved by engineer for use of lot grading. Stockpiles shall be surrounded with filter fence and shall be seeded per I.D.O.T. Manual (latest addition) (temporary) if left more than 14 working days.
- General contractor shall notify all utility companies having underground utilities on site or in right-of-way prior to excavation. Contractor shall contact utility locating company and locate all utilities prior to grading start.

PHASING NOTES:

SEQUENCE OF MAJOR ACTIVITIES

The Contractor will be responsible for implementing the following erosion control and storm water management control measures. The Contractor may designate these tasks to certain subcontractors as he sees fit, but the ultimate responsibility for implementing these controls and ensuring their proper functioning remains with the Contractor. The order of activities will be as follows (refer to the Erosion and Sediment Control Plan Sheet contained in this SWPPP for details and refer to the Suggested Phasing Plan in the design drawings for construction sequencing):

A. Secure storm water NPDES permit with the IEPA at least 30 days prior to beginning work. (NOT REQUIRED FOR THIS PROJECT)
B. A pre-construction meeting shall be held by the Site Project Manager and the Operator's Engineer prior to land disturbing activities.
C. Install inlet protection to existing storm infrastructure in the locations shown on the Removal and Water Main Installation Plan sheets.
D. Implement erosion control measures around the existing storm sewer to prevent sedimentation from infiltrating into the storm sewer system as shown on the Demolition Plan sheets..
E. Begin clearing and grubbing operations if applicable. Clearing and grubbing shall be done only in areas where earthwork will be performed.
F. Disturbed areas of the site where Construction Activity has ceased for more than 7 days shall be temporarily seeded and watered.
G. Construct water main, valves and hydrants as shown in plans.
H. Install inlet / outlet protection around the constructed storm sewer and/or culverts to prevent sedimentation from infiltrating into the storm sewer system as shown on the Erosion Control & Restoration Plan sheets.
I. Finalize pavement, concrete and aggregate preparation.
J. Install base material as required for pavement.
K. Respread topsoil.
L. Temporary seed all fill slopes around perimeter of project (if applicable).
M. Carry out final grading and seeding, sodding and other plantings, including rolled erosion control products where shown on the Erosion Control & Restoration Plan sheets.
N. Remove silt fencing only after all surfaces at are at least 70% growth of permanent seedings are stabilized.
O. Remove inlet protection around inlets and manholes.

A schedule for implementation for the activities identified above is included as Form C-3 of the SWPPP.

FAILURE TO COMPLY:

In the event a notice of violation is issued on this project, any and all fines will be the sole responsibility of the contractor. The owner, owner's representative, or other owner's agents will not participate in any payment or reimbursement for fines and will not authorize time extensions due to delays in project progress for work stoppage required to remedy the violations.

NOTES

This plan has been prepared to comply with the provisions of the NPDES Permit Number issued by the Illinois Environmental Protection Agency for Stormwater Discharges from Construction Site Activities.

The total area of the site that is estimated to be disturbed by excavation, grading, or other activities, is less than 1.0 acres (0.55ac) of disturbance.

1. Site Description.
   a. The Overall area is tributary to site runoff and Village storm sewer and roadway ditches.
   b. The following is a description of the construction activity which is the subject of this plan: The proposed development consists of construction of water main. The construction activities for site improvements will include: site clearing, grubbing, removals, installation of water main, installation of soil erosion and sedimentation control measures and restoration, as a minimum.
   c. The following is a description of the intended sequence of major activities which will disturb soils for major portions of the construction site such as grubbing, excavation, and grading:

      The sequence of the construction activities may be as follows:
      See Sequence of major activities on this sheet.

   The soil erosion and sedimentation control items will be constructed as needed during the above construction activities.

2. Controls.

   This plan addresses the various controls that will be implemented for each of the major construction activities described in 1.b above. For each measure discussed, the contractors will be responsible for its implementation as indicated. Each such contractor has signed the required certification on forms which are attached to, and are a part of, this plan.

   a. Erosion and Sediment Controls.

      (i) STABILIZATION PRACTICES. Provided below is a description of interim and permanent stabilization practices, including site-specific scheduling of the implementation of the practices. Site plans will ensure that existing vegetation is preserved where attainable and disturbed portions of the site will be stabilized. Except as provided in 2.a. (i) (A) and 2.b. stabilization measures shall be initiated as soon as practicable in portions of the site where construction activities have temporarily or permanently ceased, but in no case more than 10 days after the construction activity in that portions of the site where construction activity will not occur for a period of 21 or more calendar days.

         (A) Where the initiation of stabilization measures by the 14th day after construction activity temporarily or permanently ceases is precluded by snow cover, stabilization measures shall be initiated as soon as practicable thereafter.

         The following interim and permanent stabilization practices, as a minimum, will be implemented to stabilize the disturbed area of the site.
         1. Temporary Seeding
         2. Permanent Seeding
         3. Erosion Blanket
         4. Stabilized Construction Entrance
         5. Stone Riprap
         6. Vegetative Filter
         7. Vegetative Channel
         8. Inlet Protection
         8. Outlet Protection
         9. Dust & Traffic Control
         10. Barrier Fence

      (ii) STRUCTURAL PRACTICES. Provided below is a description of structural practices that will be implemented, to the degree attainable, to divert flows from exposed soils, store flows or otherwise limit runoff and the discharge of pollutants from exposed areas of the site. The installation of these devices may be subject to Section 404 of the Clean Water Act.
         1. Detention basins
         2. Storm sewer system
         3. Vegetated drainage swales
         4. Permanent seeding
         5. Stone Riprap
         6. Filter fabric
         7. Inlet and Outlet Protection

   b. Erosion Control. It shall be the Contractor's responsibility to provide adequate erosion control on the job site. The following erosion control sequence shall be adhered to:
      See Sequence of major activities on this sheet

      Any siltation of structures or ditches shall be cleaned and maintained by the Contactor, on a weekly basis, until the seeding has taken hold. 70% growth of permanent grass or temporary cover crop. All washouts, gullies, etc. will be regraded and reseeded by the Contactor, at the Contractor's expense.

      The Contractor's responsibility for erosion control shall extend throughout the construction process. The Contractor shall be responsible for cleanup of paved surfaces within and adjacent to the project.

      All erosion control practices shall be in compliance with the latest revision of the "Illinois Urban Manual," by the Natural Resources Conservation Service and with "Standards and Specifications for Soil Erosion and Sedimentation Control" as published by the Illinois Environmental Protection Agency.

      If a topsoil stockpile location is provided and approved by the Owner, Contractor shall establish erosion control measures for the stockpile if it is to remain in place for more than three days. In addition, barrier filter fence shall enclose topsoil stockpile location with exception of truck access during construction hours.

   c. Stormwater Management

      (i) Provided below is a description of measures that will be installed during the construction process to control pollutants in stormwater discharges that will occur after construction operations have been completed. The installation of these devices may be subject to Section 404 of the Clean Water Act.

      The practices selected for implantation were determined on the basis of the technical guidance contained in IEPA's Standard Specifications for Soil Erosion and Sedimentation Control, and other ordinances listed in the Specifications.

      The stormwater pollutant control measures shall include:
      1. Silt Filter fence
      2. Drainage Swales
      3. Storm Sewers
      4. Stone Riprap
      5. Rip-Rap outlet protection
      6. Wetland restoration
      7. Native Plantings
      8. Filter fabric
      9. Riparian Buffers

      (ii) Velocity dissipation devices will be placed at discharge locations and along the length of any outfall channel as necessary to provide a non-erosive velocity flow from the structure to a water course so that the natural physical and biological characteristics and functions are maintained and protected (e.g., maintenance of hydrologic conditions, such as the hydroperiod and hydrodynamics present prior to the initiation of construction activities).

      Stormwater Management Control includes:
      1 Stone Riprap
      2 Filter Fabric
      3 Vegetative channels.
      4 Outlet protection using RipRap.
      5 Inlet protection.
      6 Wetland Restoration
      7 Native Plantings
      8 Riparian Buffer

   d. Approved State and Local Plans.

      The management practices, controls and other provisions contained in this plan are at least as protective as the requirements contained in the Illinois Environmental Protection Agency's Standards and Specifications for Soil and Erosion and Sediment Control dated June 2013. Illinois Procedures and Standards for Urban Soil Erosion and Sedimentation Plan, and the Municipal Subdivision Ordinance. Requirements specified in sediment and erosion control site plans or site permits or stormwater management or site plans or site permits approved by local officials that are applicable to protecting surface water resources are, upon submittal of an NOI to be authorized to discharge under this permit, incorporated by reference and are enforceable under this permit even it they are not specifically included in the plan.

   e. Maintenance.

      The following is a description of procedures that will be used to maintain, in good and effective operating conditions, vegetation, erosion and sediment control measures and other protective measures identified in this plan and Standard Specifications.

      Stabilized construction entrance: The entrance shall be maintained to prevent tracking of sediment onto public streets. This will be done by top dressing with additional stones, remove and replace top layer of stones or washing the entrance. The sediment washed on the public right-of-way will be removed immediately.

      Vegetative erosion control measures: The vegetative growth of temporary and permanent seeding shall be maintained periodically and supply adequate watering. The vegetative cover shall be reseeded as necessary.

      Silt filter fence: The damaged silt filter fence shall be restored to meet the standards or removed and replaced as needed.

      Riprap outlet protection: It shall be inspected after high flows for any scour beneath the riprap or for stones that have been dislodged. It shall be repaired immediately.

      Inlet Protection: Shall be inspected and emptied of silt if filled as required.

      Stabilization of the disturbed areas must be initiated within one working day of permanent or temporary cessation of earth disturbing activities and shall be completed as soon as possible but not later than 14 days form the initiation of the stabilization work in an area.
      (i) Appropriate temporary or permanent stabilization measures shall include seeding, mulching, sodding, and/or non-vegitative measures.
      (ii) Areas having slopes greater than 12 percent shall be stabilized with sod, mat, or blanket in combination with seeding or equivalent.

   Soil storage piles containing more than 10 cu. yds. of material shall not be located with a downslope drainage length less than 25 feet to a roadway or drainage channel. Filter barriers, including straw bales, filter fence, or equivalent, shall be installed immediately on the down slope of the piles.

3. Other Controls.
   (i) Waste Disposal. The solid waste materials including trash, construction debris, excess construction materials, machinery, tools and other items will be collected and disposed off-site by the contractor. The contractor is responsible to acquire any permit required for such disposal. Burning on the site will not be permitted. No solid materials, including building materials, shall be discharged into Water of the State, except as authorized by a Section 404 permit.
   (ii) The provisions of this plan shall ensure and demonstrate compliance with applicable State and/or local waste disposal, sanitary sewer or septic system regulations.
   (iii) The sanitary sewage will be discharged to the proposed sanitary sewer constructed per IEPA and local standards.

4. Inspections.

   The Owner, or Owner's representative shall provide qualified personnel to inspect disturbed areas of the construction site which have not been finally stabilized, structural control measures and location where vehicles enter or exit the site. Such inspections shall be conducted at least once every seven (7) calendar days and within 24 hours of the end of a storm that is 0.5 inches or greater or equivalent snowfall.

   a. Disturbed areas and areas used for storage of materials that are exposed to precipitation shall be inspected for evidence of, or the potential for, pollutants entering the drainage system. Erosion and sediment control measures identified in the plan shall be observed to ensure that they are operating correctly. Where discharge locations or points are accessible, they shall be inspected to ascertain whether erosion control measures are effective in preventing significant impacts to receiving waters. Locations where vehicles enter or exit the site shall be inspected for evidence of off-site sediment tracking.

   b. Based on the results of the inspection, the description of potential pollutant sources identified in section 1 above and pollution prevention measures identified in Section 2 above shall be revised as appropriate as soon as practicable after such inspection. Any changes to this plan resulting from the required inspections shall be implemented within 7 calendar days following the inspection.

   c. A report summarizing the scope of the inspection, name(s) and qualifications of personnel making the inspection, the date(s) of the inspection, major observations relating to the implementation of this stormwater pollution prevention plan and actions taken in accordance with section 4.b shall be made and retained as part of the plan for at least three (3) years after the date of the inspection. The report shall be signed in accordance with Part VI.G of the general permit.

   d. If any violation of the provisions of this plan is identified during the conduct of the construction work covered by this plan, the Resident Engineer or Resident Technician shall complete and file an "Incidence of Noncompliance" (ION) report for the identified violation. The Resident Engineer or Resident Technician shall use forms provided by the Illinois Environmental Protection Agency and shall include specific information on the cause of noncompliance, actions which were taken to prevent any further causes of noncompliance, and a statement detailing any environmental impact which may have resulted from the noncompliance. All reports of noncompliance shall be signed by a responsible authority in accordance with Part VI. G of the general permit. The report of noncompliance shall be mailed to the following address:

      Illinois Environmental Protection Agency
      Division of Water Pollution Control
      Attn: Compliance Assurance Section
      2200 Churchill Road
      P.O. Box 19276
      Springfield, Illinois 62794-9276

5. Non-Stormwater Discharges.

   Except for flows from fire fighting activities, sources of non-stormwater that may be combined with stormwater discharges associated with the construction activity addressed in this plan, are described below:

   a. Water main flushing
   b. Fire hydrant flushing
   c. Watering for dust control
   d. Irrigation drainage for vegetative growth for seeding, etc.

   The pollution prevention measures, as described below, will be implemented for non-stormwater components of the discharge.

   The fire hydrant and water main shall not be flushed directly on the exposed area of sub grade of the pavement. Hoses shall be used to direct the flow into the storm sewer system, if available.

   The erosion due to irrigation of seeding shall be considered minor.

   Contractor to provide the above non-stormwater discharged control to the standard specification required by the County or the approved equal.

6. Monitoring and Management Plan
   A 3-year maintenance and monitoring plan is required after installation of native landscaping. See Project Specifications for details.

7. I certify under penalty of law that I understand the terms and conditions of the general National Pollutant Discharge Elimination System (NPDES) permit (ILR10) that authorizes the storm water discharges associated with industrial activity from the construction site identified as part of this certification."

CONTRACTOR'S AND SUBCONTRACTOR'S CERTIFICATE

I certify under penalty of law that I understand the terms and conditions of the general National Pollutant Discharge Elimination System (NPDES) permit (ILR10) that authorizes the storm water discharges associated with industrial activity from the construction site identified as part of this certification.

CONTRACTOR'S PRINTED NAME AND SIGNATURE — CERTIFICATION DATE

CONTRACTOR TITLE — TELEPHONE NUMBER

CONTRACTOR COMPANY NAME AND ADDRESS

SUBCONTRACTOR'S NAME AND SIGNATURE — CERTIFICATION DATE

SUBCONTRACTOR'S TITLE — TELEPHONE NUMBER

SUBCONTRACTOR'S COMPANY NAME AND ADDRESS

BROCK CT., SEDGWICK CT, FARO CT.

SITE ADDRESS

IEPA: ILR10 PERMIT #_____

FINAL – FOR BIDDING

NO.	DATE	BY	REVISION DESCRIPTION

HRGreen
ILLINOIS DESIGN FIRM
184.001322
2363 SEQUOIA DRIVE,
SUITE 101
AURORA, IL 60506
PHONE: 630.553.7560
FAX: 630.553.7646

VARIOUS WATER MAIN REPLACEMENT
CLIENT: VILLAGE OF OSWEGO
OSWEGO, IL
FINAL – FOR BIDDING
ERROSION CONTROL SPECIFICATIONS

BAR IS ONE INCH ON OFFICIAL DRAWINGS
0 — 1"
IF NOT ONE INCH, ADJUST SCALE ACCORDINGLY

DRAWN BY: ELC/SAS
APPROVED: DWS
JOB DATE: 03/05/2020
JOB NO: 180055.03

DRAWING
C-13

J:\2018\180055\180055.03-Various_Residential_Watermain_Replacement_Areas\CAD\Dwgs\C\180055.03-Details.dwg
Xrefs: xgl-1-dv01
2/27/2020 2:55:17 PM

(DC) ROLLED EROSION CONTROL PRODUCTS

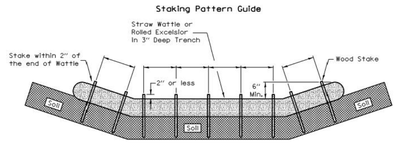

Notes:

1. Overlap minimum is the diameter of the roll.
2. 4' spacing for wattles.
3. 2' spacing for rolled excelsior.
4. Or space according to manufacturer's specifications.

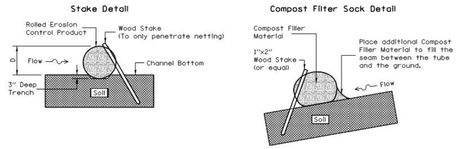

When compost filter sock ditch check is used, place a compost berm upstream of the filter sock (see IUM 805). A trench is not required.

Notes:

1. Drawings are not to scale.
2. Ends of wattles or rolled excelsior shall be turned at least 6" upslope.
3. Recommended stakes are 1 1/8" wide x 1 1/8" thick x 30" long
4. Stakes shall not extend above the straw wattle more than 2".
5. Spacing: The toe of the upstream ditch check shall create a horizontal line with the top of the downstream ditch check.
6. When compost filter sock ditch check is used, place a compost berm upstream of the filter sock (see IUM 805). A trench is not required.

REFERENCE		STANDARD DWG. NO.
Project		IUM-514
Designed ____ Date ____		SHEET 1 OF 1
Checked ____ Date ____		DATE 8-19-11
Approved ____ Date ____		

(IP) (FB) INLET PROTECTION - PAVED AREAS DROP-IN PROTECTION

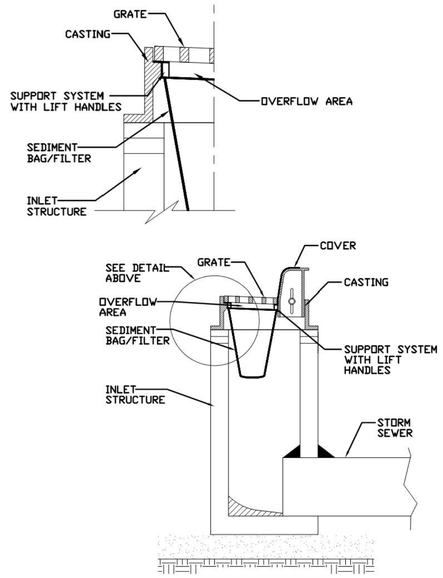

REFERENCE		STANDARD DWG. NO.
Project		IUM-561D
Designed ____ Date ____		SHEET 1 OF 1
Checked ____ Date ____		DATE 01-11-11
Approved ____ Date ____		

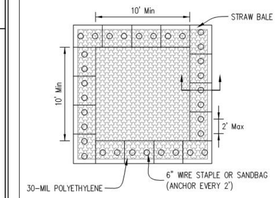

PLAN VIEW

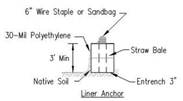

STRAW BALE ANCHOR SECTIONS

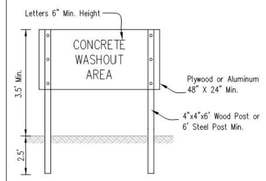

SIGN DETAIL

NOTES:

1. Maintaining temporary concrete washout facilities shall include removing and disposing of hardend concrete and/or slurry and returning the facilities to a functional condition.
2. Facility shall be cleaned or reconstructed in a new area once washout becomes two-thirds full.
3. Each straw bale is to be staked in place using (2) 2"x2"x4' wooden stakes.

Scale: NONE	Drawing No. 805D	TEMPORARY CONCRETE WASHOUT FACILITY - STRAW BALE

	Date
Designed	
Drawn S. JOHNSON	6/08
Checked	
Approved	

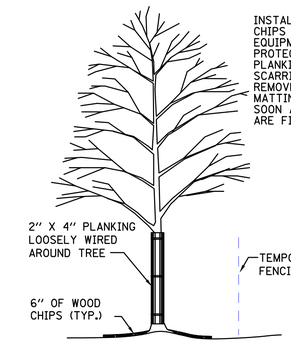

TYP. TREE TRUNK PROTECTION DETAIL

SCALE: NTS

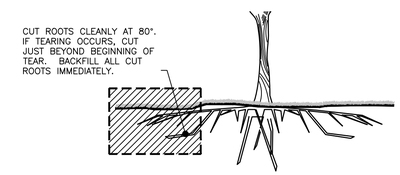

TYP. ROOT PRUNING DETAIL

SCALE: NTS

DANDY DEWATERING BAG™

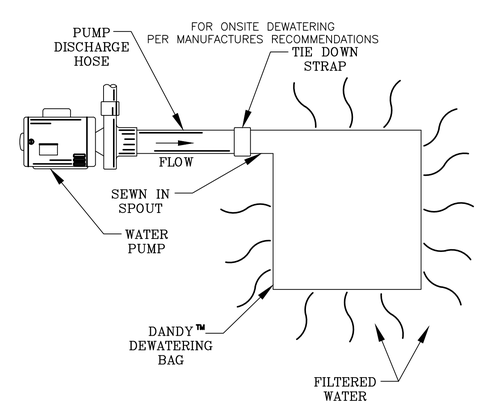

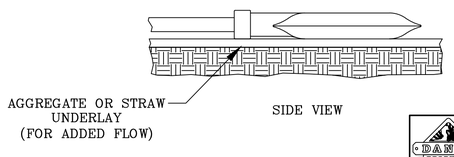

DETAIL OF A DEWATERING BAG

PROJECT:		DR. BY:
CITY/STATE:	DATE:	DR. NO:

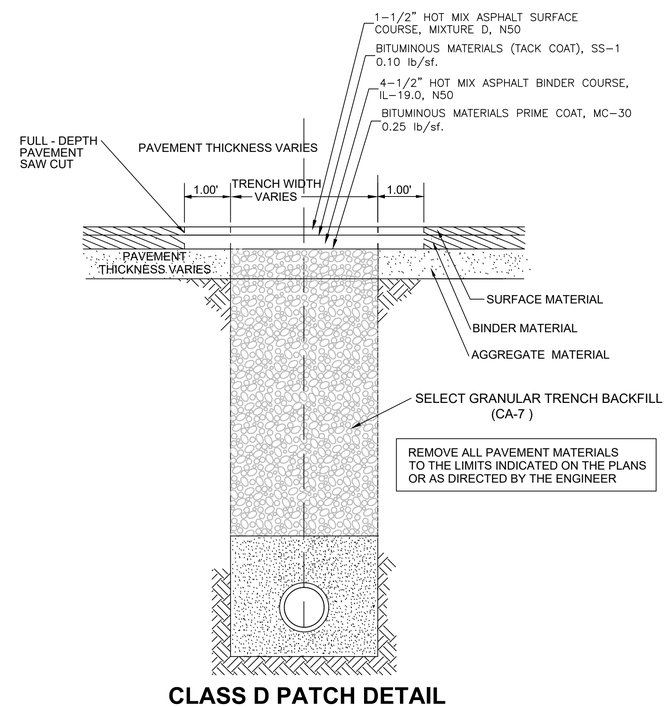

CLASS D PATCH DETAIL

FINAL – FOR BIDDING

NO.	DATE	BY	REVISION DESCRIPTION

HRGreen
ILLINOIS DESIGN FIRM # 184.001322
2363 SEQUOIA DRIVE, SUITE 101
AURORA, IL 60506
PHONE: 630.553.7560
FAX: 630.553.7646

VARIOUS WATER MAIN REPLACEMENT
CLIENT: VILLAGE OF OSWEGO
OSWEGO, IL

FINAL – FOR BIDDING

EROSION CONTROL DETAILS

BAR IS ONE INCH ON OFFICIAL DRAWINGS
0 — 1"
IF NOT ONE INCH, ADJUST SCALE ACCORDINGLY

DRAWN BY: ELC/SAS
APPROVED: DWS
JOB DATE: 03/05/2020
JOB NO: 180055.03

DRAWING
C-14

J:\2018\180055\180055.03-Various_Residential_Watermain_Replacement_Areas\CAD\Dwgs\C\180055.03-Details.dwg
Xrefs: xgt-1-dv01
2/27/2020 2:55:17 PM

STANDARD VALVE VAULT DETAIL

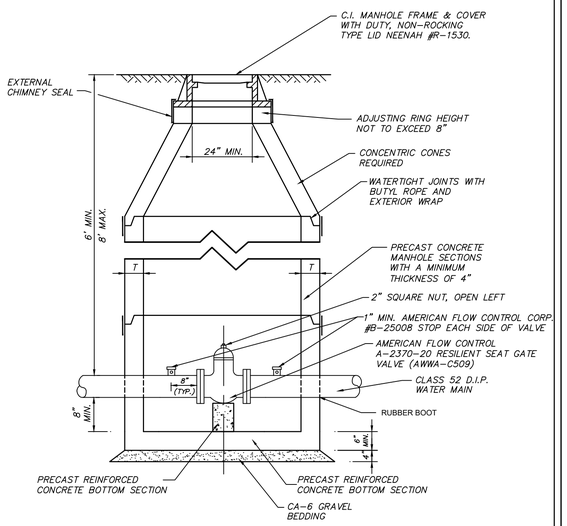

NOTES:

1. DRAIN FOR VALVE VAULT SHALL BE CONSTRUCTED ONLY WHEN SHOWN ON PLANS.
2. FOR PRESSURE CONNECTION SEE SEPARATE DETAIL.

DIAMETER OF WATER MAIN	D	T
8 INCHES AND UNDER	4'-0"	4"
10 INCHES AND OVER	5'-0"	5"

REVISIONS	
INITIAL	DATE
JPH	MARCH 2007

OSW-W-8

CURB BOX INSTALLATION DETAIL

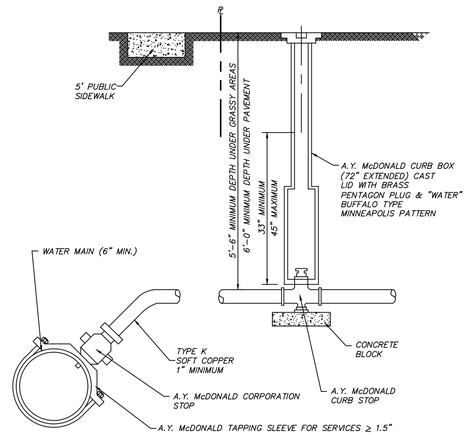

NOTES:

1. NO CORPORATION STOPS, SERVICE COPPERS, OR CURB BOXES MAY BE LOCATED UNDER PAVED AREAS INCLUDING DRIVES AND SIDEWALKS.
2. ALL WATER MAIN HARDWARE SHALL BE A.Y. McDONALD.
3. SERVICE TO BE CONTINUOUS WITHOUT JOINTS FROM CORPORATION STOP TO CURB STOP.
4. MULTIPLE TAPS INTO MAIN SHALL BE NO CLOSER THAN 2' APART.
5. TRENCH FROM MAIN TO BACK OF SIDEWALK TO BE COMPACTED TRENCH BACKFILL CA-6.

REVISIONS	
INITIAL	DATE
JPH	MARCH 2007

OSW-W-3

FIRE HYDRANT INSTALLATION DETAIL

CLOW MEDALLION TYPE HYDRANT (5-1/4" BARREL)

WATEROUS PACER WB-67-250 FIRE HYDRANT (5-1/4" BARREL)

ALL AMERICAN FLOW CONTROL VALVES & HARDWARE AUXILLARY VALVE 6" GATE VALVE NO. A-2370-20 MODIFIED WEDGE RESILIENT SEAT

USE WATEROUS PACER WB-67-250 HYDRANT 6" TRENCH DEPTH, 6" MJ SHOE, 1-1/2" PENTAGON OPERATING NUT, OPEN LEFT, NATIONAL STANDARD NOZZLES, PAINTED RED

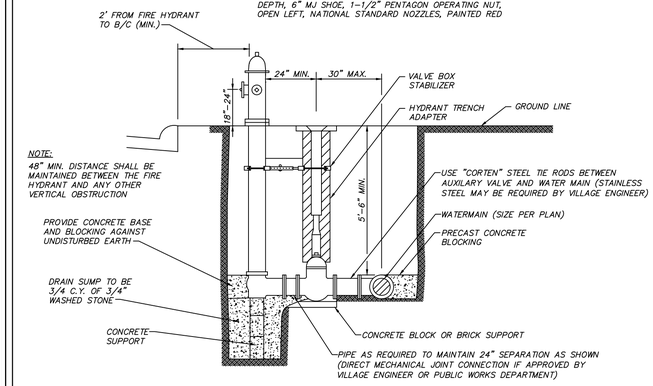

NOTE:
48" MIN. DISTANCE SHALL BE MAINTAINED BETWEEN THE FIRE HYDRANT AND ANY OTHER VERTICAL OBSTRUCTION

NOTE:
FIRE HYDRANTS SHALL BE PLACED APPROXIMATELY 300 FEET APART. LOCATION OF HYDRANTS MUST BE APPROVED BY VILLAGE ENGINEER OR PUBLIC WORKS DEPARTMENT.

REVISIONS	
INITIAL	DATE
JPH	MARCH 2007

OSW-W-5

THRUST BLOCK INSTALLATION DETAIL

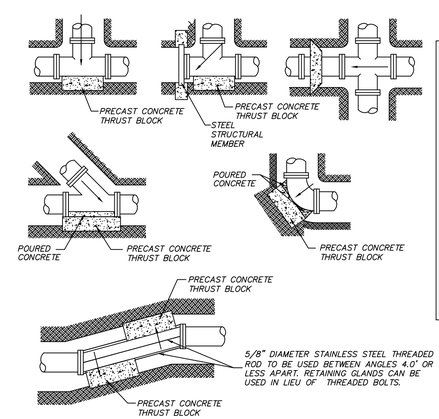

BEARING AREA (SQ. FT.)

PIPE SIZE	TEE/PLUG	90°	45°	22-1/2°	11-1/4°
6	4	2	1	1	1
8	6	4	3	1	1
10	7	5	3	2	1
12	8	6	4	3	2
14	12	9	6	4	3
16	15	12	7	5	3
18	18	15	9	5	4
24	40	30	15	10	5

ALL BLOCKING SHALL BE 12" PRE-CAST CONCRETE BLOCK AGAINST UNDISTURBED EARTH.

ALL BENDS OR ELBOWS GREATER THAN AND INCLUDING 11-1/4° SHALL HAVE THRUST BLOCKING.

REVISIONS	
INITIAL	DATE
JPH	MARCH 2007

OSW-W-2

WATER MAIN PRESSURE CONNECTION DETAIL

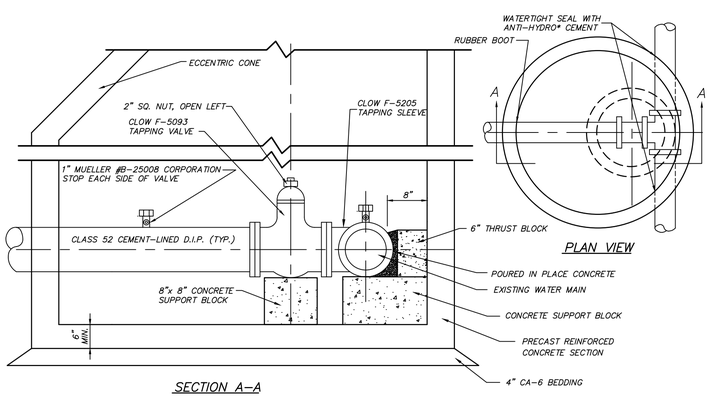

NOTES:
C.I. MANHOLE FRAME AND COVER NEENAH R-1530 OR APPROVED EQUAL WITH STANDARD DUTY, NON-ROCKING TYPE LIDS. ADJUSTING RING HEIGHT NOT TO EXCEED 8" STANDARD VALVE VAULT SPECIFICATIONS REQUIRE ECCENTRIC CONES (SEE SEPARATE DETAIL).

SPLIT BOTTOMS MUST BE WATER TIGHT SEAL WITH ANTI-HYDRO* CEMENT.

ALL EXTERNAL JOINTS MUST BE WRAPPED.

* OR APPROVED EQUAL.

REVISIONS	
INITIAL	DATE
JPH	MARCH 2007

OSW-W-1

FINAL – FOR BIDDING

NO.	DATE	BY	REVISION DESCRIPTION

ILLINOIS DESIGN FIRM
184.001322
2363 SEQUOIA DRIVE,
SUITE 101
AURORA, IL 60506
PHONE: 630.553.7560
FAX: 630.553.7646
HRGreen

VARIOUS WATER MAIN REPLACEMENT
CLIENT: VILLAGE OF OSWEGO
OSWEGO, IL

FINAL – FOR BIDDING
CONSTRUCTION DETAILS

BAR IS ONE INCH ON OFFICIAL DRAWINGS
0 1"
IF NOT ONE INCH, ADJUST SCALE ACCORDINGLY

DRAWN BY: ELC/SAS
APPROVED: DWS
JOB DATE: 03/05/2020
JOB NO: 180055.03

DRAWING
C-15

J:\2018\180055\180055.03-Various_Residential_Watermain_Replacement_Areas\CAD\Dwgs\C\180055.03-Details.dwg
Xrefs: xgl-1-dv01
2/27/2020 2:55:17 PM

TRENCH BEDDING/BACKFILLING CROSS SECTION

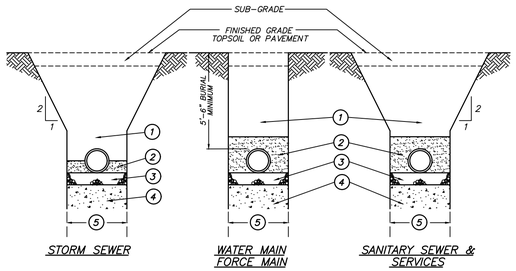

1. Trench backfill under pavement, curb and gutter as indicated in road subgrades and within 2 feet of any proposed curb and gutter or sidewalk. Mechanically compacted backfill of excavated materials in other locations if approved by the Village Engineer. Refer to trench backfill special provisions for materials and compaction requirements.

2. WATER MAIN, FORCE MAIN (D.I.P.)
   Compacted granular material CA-7 to 4" above top of pipe.

2. SANITARY SEWER (PVC)
   Compacted granular material CA-7 to 12" above top of pipe (also see note #1 below).

2. STORM SEWER
   Compacted granular backfill material CA-7 to spring line of pipe

3. 4" compacted granular bedding, CA-7 gradation.

4. Unsuitable material to be removed where directed by Engineer and replaced with suitable material and compacted.

5. Trench Width – Pipe O.D. + 12" minimum
   Pipe O.D. + 18" maximum

NOTES:

1. PVC pipe conforming to the SDR specified in the plans shall be installed to the latest revised specification requirements of ASTM D-2321 using either compacted Class I or Class II granular embedment materials for bedding, haunching and initial backfill of 12 inches over the top of pipe to provide the necessary support for the pipe so that the maximum deflection does not exceed 5% of the pipe's original internal diameter.

2. All CA-7 to be IDOT approved or meet IDOT specifications.

REVISIONS	
INITIAL	DATE
JPH	MARCH 2007

RESIDENTIAL DRIVEWAY APPROACH DETAIL

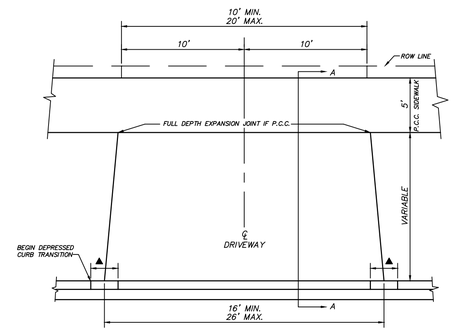

▲ – TRANSITION FROM FULL CURB IN 2 LINEAL FEET.
– DRIVEWAY APPROACH SHALL MEET CURB AND GUTTER AT A POINT BETWEEN FULL CURB AND ONE-HALF CURB HEIGHT.
– DRIVEWAY FLARE SHALL BE SYMETRIC ABOUT THE DRIVEWAY CENTERLINE UNLESS OTHERWISE APPROVED BY THE ENGINEER.

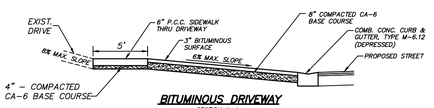

BITUMINOUS DRIVEWAY
SECTION A–A
(AS APPROVED BY VILLAGE ENGINEER)

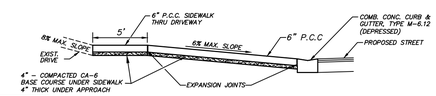

P.C.C. DRIVEWAY
SECTION A–A

REVISIONS	
INITIAL	DATE
JPH	MARCH 2007

OSW-R-2

SIDEWALK DETAIL

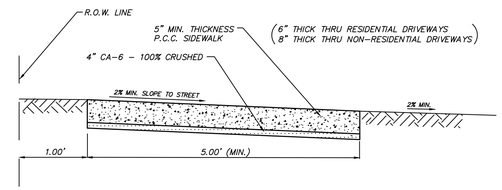

NOTES:

ALL SIDEWALKS SHALL HAVE CONTRACTION JOINTS AT 5' INTERVALS AND EXPANSION JOINTS AT 50' INTERVALS. MINIMUM SIDEWALKS AS PER VILLAGE OF OSWEGO SUBDIVISION CONTROL ORDINANCE – FIGURE 1

REVISIONS	
INITIAL	DATE
JPH	MARCH 2007

OSW-R-4

PUBLIC SIDEWALK AND HANDICAP RAMP DETAIL

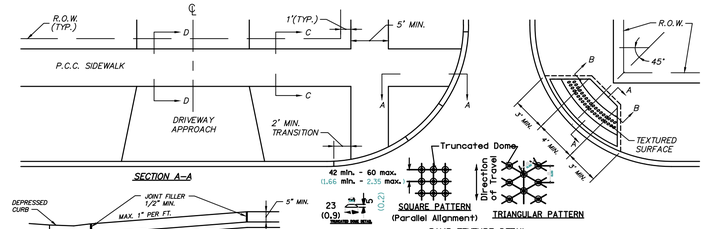

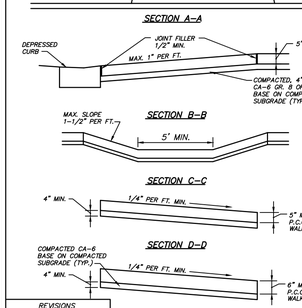

RAMP TEXTURE DETAIL

1. ALL SIDEWALKS SHALL BE CONSTRUCTED OF 6-BAG MIX PORTLAND CEMENT CLASS "S" CONCRETE WITH A TRANSVERSE BROOM FINISH AND TOOLED EDGES AND JOINTS IN ACCORDANCE WITH THE IDOT STANDARD SPECIFICATIONS OF ROAD AND BRIDGE CONSTRUCTION. RAMP TEXTURING IS TO BE DONE WITH AN APPROVED MOLD PLACED AND REMOVED FROM WET RED DYED CONC. TO LEAVE A TRUNCATED CONE PATTERN AS SHOWN. THE LONG AXIS OF THE PATTERN SHALL BE PERPENDICULAR TO THE CURB. GROOVES SHALL BE 1/8" DEEP AND 1/4" WIDE. A CURING COMPOUND SHALL BE APPLIED TO ALL SURFACES. SPECIAL ATTENTION SHALL BE GIVEN TO POURING CONCRETE IN COLD WEATHER. NO CONCRETE SHALL BE POURED ON A FROZEN SUBGRADE OR BASE. REFER TO THE VILLAGE'S COLD WEATHER SPECIFICATIONS FOR ALL SUCH CONSTRUCTION.
2. CONCRETE SHALL BE CONSTRUCTED ON A WELL COMPACTED SUBGRADE AND GRANULAR BASE. SUBGRADE, BASE, FORMS, AND ALIGNMENT SHALL BE INSPECTED BY THE VILLAGE INSPECTOR PRIOR TO PLACEMENT.
3. CONTRACTION JOINTS SHALL BE PLACED ON 5-0" CENTERS. FULL DEPTH EXPANSION JOINTS ARE REQUIRED EVERY FIFTY FEET.
4. THE THICKNESS OF SIDEWALKS SHALL BE 5" MIN. ON 4" MIN. CA-6 BASE AND 6" MIN. THICK THRU RESIDENTIAL DRIVEWAY APPROACHES. PEA GRAVEL AND SAND ARE NOT ACCEPTABLE BASE COURSE MATERIAL. THEY SHALL BE A MINIMUM OF 5" WIDE.
5. THE FINISH GRADE OF THE SIDEWALK SHALL BE A MINIMUM PITCH TOWARD THE STREET 1/4" PER FOOT OF WIDTH.
6. NO SIDEWALK MAY BE CONSTRUCTED OVER A WATER SERVICE BOX UNLESS APPROVED BY THE VILLAGE ENGINEER.
7. RAMPS SHALL BE LOCATED AS SHOWN ON PLANS WITH CONSIDERATION GIVEN TO ALIGNMENT WITH NORMAL SIDEWALK OR CROSSWALK AND MAINTENANCE OF SUFFICIENT CURB LENGTH AT CORNER RADIUS TO PREVENT VEHICULAR ENCROACHMENT.
8. RAMPS SHALL NOT HAVE A SLOPE GREATER THAN 1" PER FOOT EXCEPT WHERE BUILDING OR OTHER RESTRICTIONS WILL NOT PERMIT.
9. ALL HANDICAP RAMP INFORMATION SHALL BE VERIFIED WITH CURRENT ADA REQUIREMENTS.

REVISIONS	
INITIAL	DATE
JPH	MARCH 2007

OSW-R-5

CONCRETE CURB AND GUTTER DETAIL

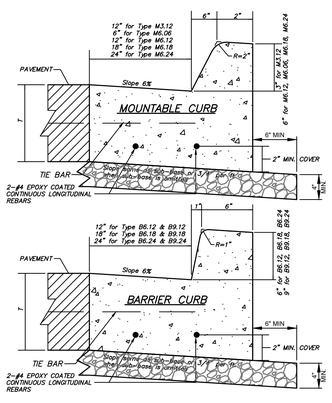

THICKNESS – T – Thickness of pavement. When curb & gutter is constructed adjacent to flexible pavement, the vertical thickness of the gutter flag shall be 9". Also, tie bars shall be omitted.

DRAINAGE OPENINGS – At all locations where metal casings are to be incorporated in the curb and gutter, a 1" thick preformed joint filler, conforming to the cross sections of the curb and gutter, shall be installed in the curb and gutter a distance of 10 ft. from each side of the metal casing. When the width of the metal casing is less than the width of the curb and gutter, 2 – No. 4 continuous long rebars & reverse pitch (L = 12" + casting length + 12") shall be incorporated in the continuous portion of concrete gutter in front of the casting.

TRANSITIONS – The transition from full height curb to depressed curb shall be made at the rate of 3" per foot of length or flatter.

JOINTS – In addition to the requirements of the Standard Specifications, joints shall be constructed as follows.

Contraction joints and expansion joints shall be installed in the curb and gutter in prolongation with joints in adjacent P.C.C. pavement or base course.

When curb and gutter is constructed adjacent to flexible pavement, a 1" thick preformed expansion joint filler, conforming to the cross section of the curb and gutter shall be installed at points of curvature for short radius curves and at construction joints. Contraction joints shall be placed between expansion joints at distances not to exceed 10 feet.

All expansion joints shall be provided with a 1 1/4 dia. X 18" epoxy coated dowel bar conforming to the Standard Specifications. The dowel bar shall be fitted with a cap having a pinched stop that will provide 1" of expansion.

All construction joints shall be provided with 1/2" dia. deformed epoxy coated steel tie bars 30" long conforming to AASHTO M-31 of M-53. Tie bars shall be placed on 9'± centers (minimum 2 per joint).

REVISIONS	
INITIAL	DATE
JPH	MARCH 2007

OSW-R-9

FINAL – FOR BIDDING

NO.	DATE	BY	REVISION DESCRIPTION

HRGreen
ILLINOIS DESIGN FIRM
184.001322
2363 SEQUOIA DRIVE,
SUITE 101
AURORA, IL 60506
PHONE: 630.553.7560
FAX: 630.553.7646

VARIOUS WATER MAIN REPLACEMENT
CLIENT: VILLAGE OF OSWEGO
OSWEGO, IL
FINAL – FOR BIDDING
CONSTRUCTION DETAILS

BAR IS ONE INCH ON OFFICIAL DRAWINGS
0 1"
IF NOT ONE INCH, ADJUST SCALE ACCORDINGLY

DRAWN BY: ELC/SAS
APPROVED: DWS
JOB DATE: 03/05/2020
JOB NO: 180055.03

DRAWING
C-16

J:\2018\180055\180055.03-Various_Residential_Watermain_Replacement_Areas\CAD\Dwgs\C\180055.03-Details.dwg
Xrefs: xg1-1-dv01
2/27/2020 2:55:17 PM

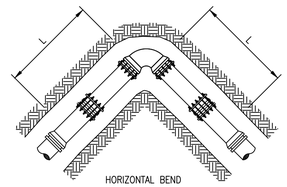

ALL JOINTS WITHIN LENGTH "L" OF FITTING MUST BE RESTRAINED

NOTE: LENGTHS L, Lr AND B TO BE SPECIFIED BY DESIGNER

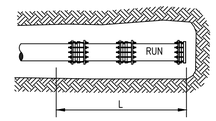

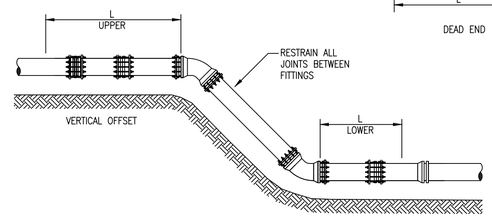

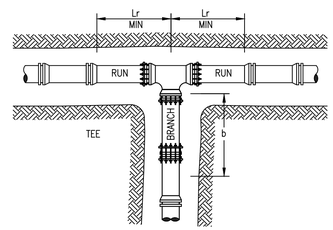

~~NOTE: LENGTHS L, Lr AND B TO BE SPECIFIED BY DESIGNER~~

20' BEYOND FITTING MUST BE RESTRAINED

RETAINING GLAND RESTRAINT

STANDARD DRAWING NO.12G

WHEN PROPOSED SEWER (OR WATER) IS LOCATED 10 FEET OR MORE FROM EXISTING WATER (OR SEWER), NO SPECIAL CONSTRUCTION REQUIRED. SEE ARTICLE 41–2.01A (1)

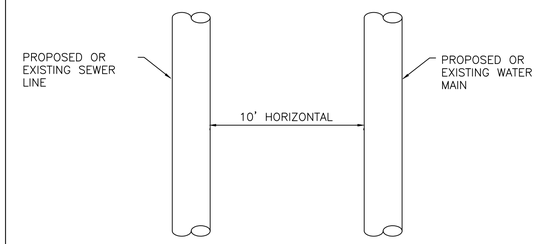

PLAN VIEW

WHEN PROPOSED SEWER (OR WATER) IS LOCATED LESS THAN 10 FEET FROM EXISTING WATER (OR SEWER), DETAILS BELOW SHALL APPLY. SEE ARTICLE 41–2.01B (2)

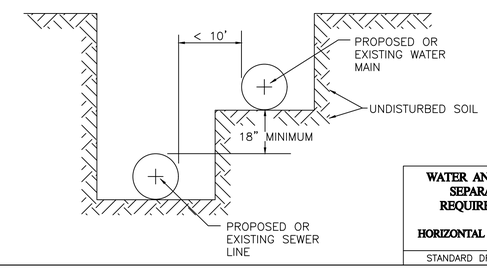

WATER AND SEWER SEPARATION REQUIREMENTS

HORIZONTAL SEPARATION

STANDARD DRAWING NO.18

PROPOSED WATER MAIN ABOVE EXISTING SEWER LINE WITH LESS THAN 18" VERTICAL SEPARATION

NOTE: COMPACTION REQUIREMENTS REFER TO ARTICLE 20–4

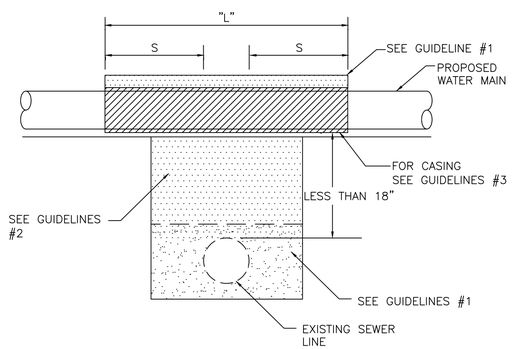

NOTE: "S" THE LENGTH NECESSARY TO PROVIDE 10 FEET OF SEPARATION AS MEASURED PERPENDICULAR TO THE EXISTING SEWER LINE.

GUIDELINES

1. OMIT SELECT GRANULAR EMBEDMENT AND GRANULAR BACKFILL TO ONE (1) FOOT OVER TOP OF WATER MAIN AND USE SELECT EXCAVATED MATERIAL (CLASS IV) AND COMPACT THE LENGTH OF "L".
2. IF SELECT GRANULAR BACKFILL EXISTS, REMOVE WITHIN WIDTH OF EXISTING SEWER LINE TRENCH AND REPLACE WITH SELECT EXCAVATED MATERIAL (CLASS IV) AND COMPACT.
3. USE "L" FEET OF WATER MAIN MATERIAL FOR CASING OF PROPOSED WATER MAIN AND SEAL ENDS OF CASING.
4. POINT LOADS SHALL NOT BE ALLOWED BETWEEN WATER MAIN CASING AND SEWER

WATER AND SEWER SEPARATION REQUIREMENTS

VERTICAL SEPARATION

STANDARD DRAWING NO.22

PROPOSED WATER MAIN BELOW EXISTING SEWER LINE WITH 18" MINIMUM VERTICAL SEPARATION.

NOTE: COMPACTION REQUIREMENTS REFER TO ARTICLE 20–4

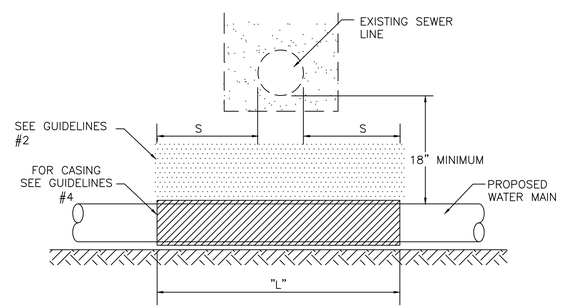

NOTE: "S" THE LENGTH NECESSARY TO PROVIDE 10 FEET OF SEPARATION AS MEASURED PERPENDICULAR TO THE EXISTING SEWER LINE

GUIDELINES

1. OMIT SELECT GRANULAR EMBEDMENT AND GRANULAR BACKFILL TO ONE (1) FOOT OVER TOP OF WATER MAIN AND USE SELECT EXCAVATED MATERIAL (CLASS IV) AND COMPACT THE LENGTH OF "L".
2. IF SELECT GRANULAR BACKFILL EXISTS, REMOVE WITHIN WIDTH OF EXISTING SEWER LINE TRENCH AND REPLACE WITH SELECT EXCAVATED MATERIAL (CLASS IV) AND COMPACT.
3. PROVIDE ADEQUATE SUPPORT FOR EXISTING SEWER LINE TO PREVENT DAMAGE DUE TO SETTLEMENT.
4. USE "L" FEET OF WATER MAIN MATERIAL FOR CASING OF PROPOSED WATER MAIN AND SEAL ENDS OF CASING.

WATER AND SEWER SEPARATION REQUIREMENTS

VERTICAL SEPARATION

STANDARD DRAWING NO.23

PLACEMENT OF WATER MAIN BELOW EXISTING OR PROPOSED SEWER LINE WITH LESS THAN 18" MINIMUM VERTICAL SEPARATION. **NOT ALLOWED.**

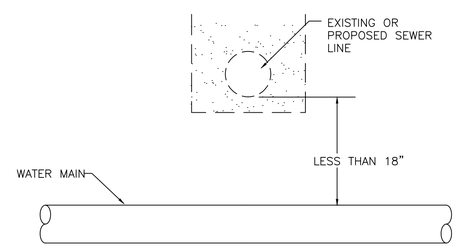

NOT ALLOWED*
MUST MAINTAIN 18" VERTICAL SEPARATION

WATER AND SEWER SEPARATION REQUIREMENTS

VERTICAL SEPARATION

STANDARD DRAWING NO.24

FINAL – FOR BIDDING

NO.	DATE	BY	REVISION DESCRIPTION

ILLINOIS DESIGN FIRM # 184.001322
2363 SEQUOIA DRIVE, SUITE 101
AURORA, IL 60506
PHONE: 630.553.7560
FAX: 630.553.7646
HRGreen

VARIOUS WATER MAIN REPLACEMENT
CLIENT: VILLAGE OF OSWEGO
OSWEGO, IL

FINAL – FOR BIDDING
CONSTRUCTION DETAILS

BAR IS ONE INCH ON OFFICIAL DRAWINGS
0 1"
IF NOT ONE INCH, ADJUST SCALE ACCORDINGLY

DRAWN BY: ELC/SAS
APPROVED: DWS
JOB DATE: 03/05/2020
JOB NO: 180055.03

DRAWING
C–17

J:\2018\180055\180055.03-Various_Residential_Watermain_Replacement_Areas\CAD\Dwgs\C\180055.03-Details.dwg
Xrefs: xgt-1-dv01
2/27/2020 2:55:17 PM

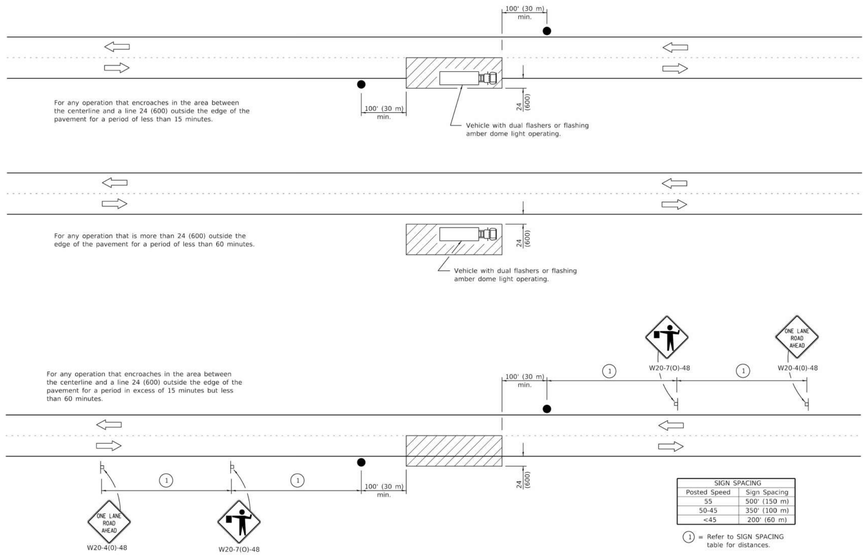

SIGN SPACING	
Posted Speed	Sign Spacing
55	500' (150 m)
50-45	350' (100 m)
<45	200' (60 m)

① = Refer to SIGN SPACING table for distances.

All dimensions are in inches (millimeters) unless otherwise shown.

TYPICAL APPLICATIONS

Marking patches
Field survey
String line
Utility operations
Cleaning up debris on pavement

SYMBOLS

Work area
Sign on portable or permanent support
Flagger with traffic control sign

Illinois Department of Transportation
PASSED January 1, 2011 — ENGINEER OF SAFETY ENGINEERING
APPROVED January 1, 2011 — ENGINEER OF DESIGN AND ENVIRONMENT
BBS IL 1 SHEET

DATE	REVISIONS
1-1-11	Revised flagger sign.
1-1-09	Switched units to English (metric).

LANE CLOSURE, 2L, 2W, SHORT TIME OPERATIONS

STANDARD 701301-04

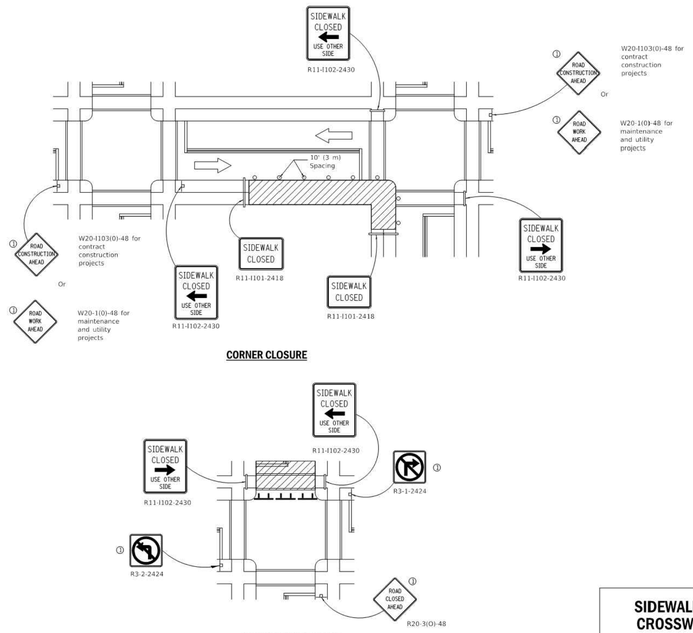

Illinois Department of Transportation
PASSED April 1, 2016 — ENGINEER OF SAFETY ENGINEERING
APPROVED April 1, 2016 — ENGINEER OF DESIGN AND ENVIRONMENT
BBS IL 1 SHEET

SIDEWALK, CORNER OR CROSSWALK CLOSURE

(Sheet 2 of 2)

STANDARD 701801-06

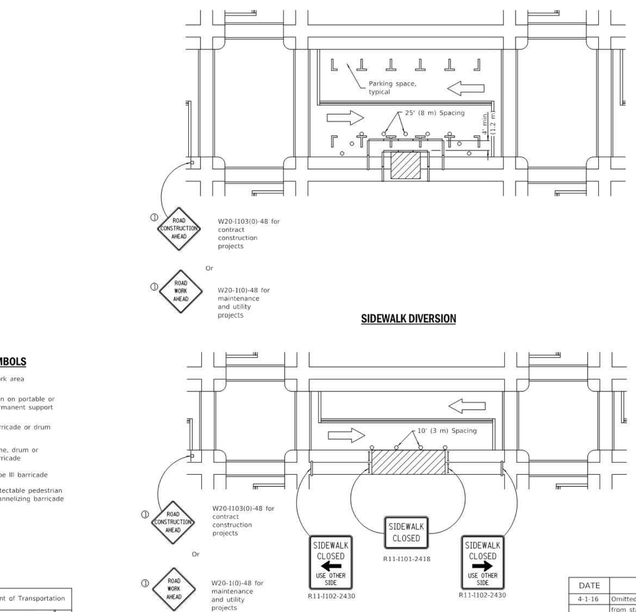

① Omit whenever duplicated by road work traffic control.

SYMBOLS

Work area
Sign on portable or permanent support
Barricade or drum
Cone, drum or barricade
Type III barricade
Detectable pedestrian channelizing barricade

GENERAL NOTES

This Standard is used where, at any time, pedestrian traffic must be rerouted due to work being performed.

This Standard must be used in conjunction with other Traffic Control & Protection Standards when roadway traffic is affected.

Temporary facilities shall be detectable and accessible.

The temporary pedestrian facilities shall be provided on the same side of the closed facilities whenever possible.

The SIDEWALK CLOSED / USE OTHER SIDE sign shall be placed at the nearest crosswalk or intersection to each end of the closure. Where the closure occurs at a corner, the signs shall be erected on the corners across the street from the closure. The SIDEWALK CLOSED signs shall be used at the ends of the actual closures.

Type III barricades and R11-2-4830 signs shall be positioned as shown in "ROAD CLOSED TO ALL TRAFFIC" detail on Standard 701901.

All dimensions are in inches (millimeters) unless otherwise shown.

Illinois Department of Transportation
PASSED April 1, 2016 — ENGINEER OF SAFETY ENGINEERING
APPROVED April 1, 2016 — ENGINEER OF DESIGN AND ENVIRONMENT
BBS IL 1 SHEET

DATE	REVISIONS
4-1-16	Omitted orange safety fence from standard as this is covered in the std. spec.
1-1-12	Added SIDEWALK DIVERSION. Modified appearance of plan views. Renamed Std.

SIDEWALK, CORNER OR CROSSWALK CLOSURE

(Sheet 1 of 2)

STANDARD 701801-06

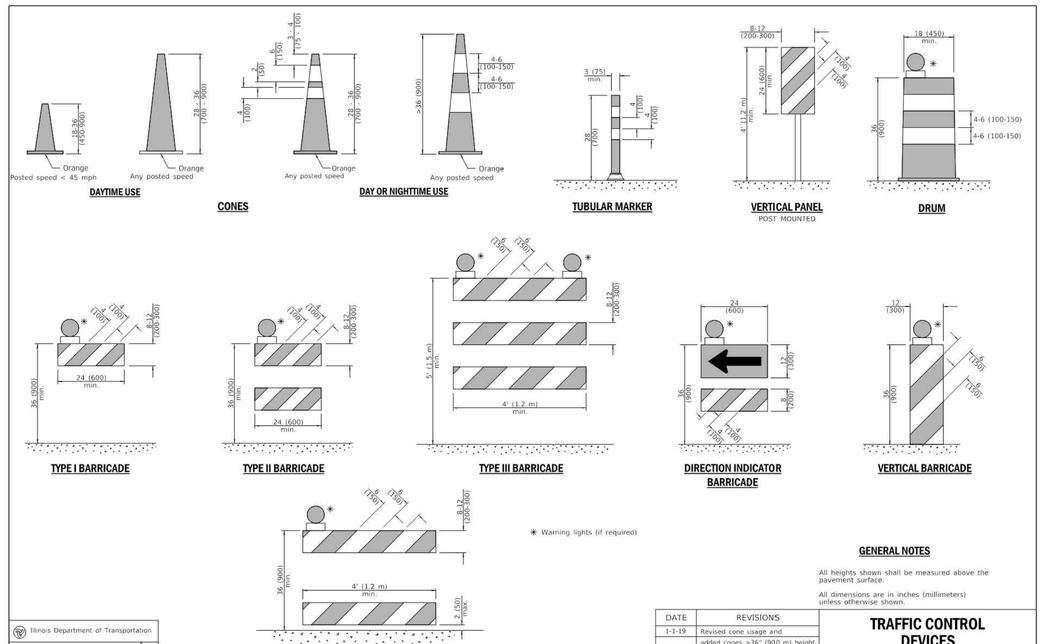

✱ Warning lights (if required)

GENERAL NOTES

All heights shown shall be measured above the pavement surface.

All dimensions are in inches (millimeters) unless otherwise shown.

Illinois Department of Transportation
APPROVED January 1, 2019 — ENGINEER OF SAFETY PROG. AND ENGINEERING
APPROVED February 1, 2019 — ENGINEER OF DESIGN AND ENVIRONMENT
BBS IL 1 SHEET

DATE	REVISIONS
1-1-19	Revised cone usage and added cones >36" (900 m) height.
1-1-18	Revised END WORK ZONE SPEED LIMIT sign from orange to white background.

TRAFFIC CONTROL DEVICES

(Sheet 1 of 3)

STANDARD 701901-08

FINAL – FOR BIDDING

NO.	DATE	BY	REVISION DESCRIPTION

ILLINOIS DESIGN FIRM
184.001322
2363 SEQUOIA DRIVE,
SUITE 101
AURORA, IL 60506
PHONE: 630.553.7560
FAX: 630.553.7646
HRGreen

VARIOUS WATER MAIN REPLACEMENT
CLIENT: VILLAGE OF OSWEGO
OSWEGO, IL

FINAL – FOR BIDDING
CONSTRUCTION DETAILS

BAR IS ONE INCH ON OFFICIAL DRAWINGS
0 — 1"
IF NOT ONE INCH, ADJUST SCALE ACCORDINGLY

DRAWN BY: ELC/SAS
APPROVED: DWS
JOB DATE: 03/05/2020
JOB NO: 180055.03

DRAWING
C-18

J:\2018\180055\180055.03-Various_Residential_Watermain_Replacement_Areas\CAD\Dwgs\C\180055.03-Details.dwg
Xrefs: xgt-1-dv01
2/27/2020 2:55:17 PM

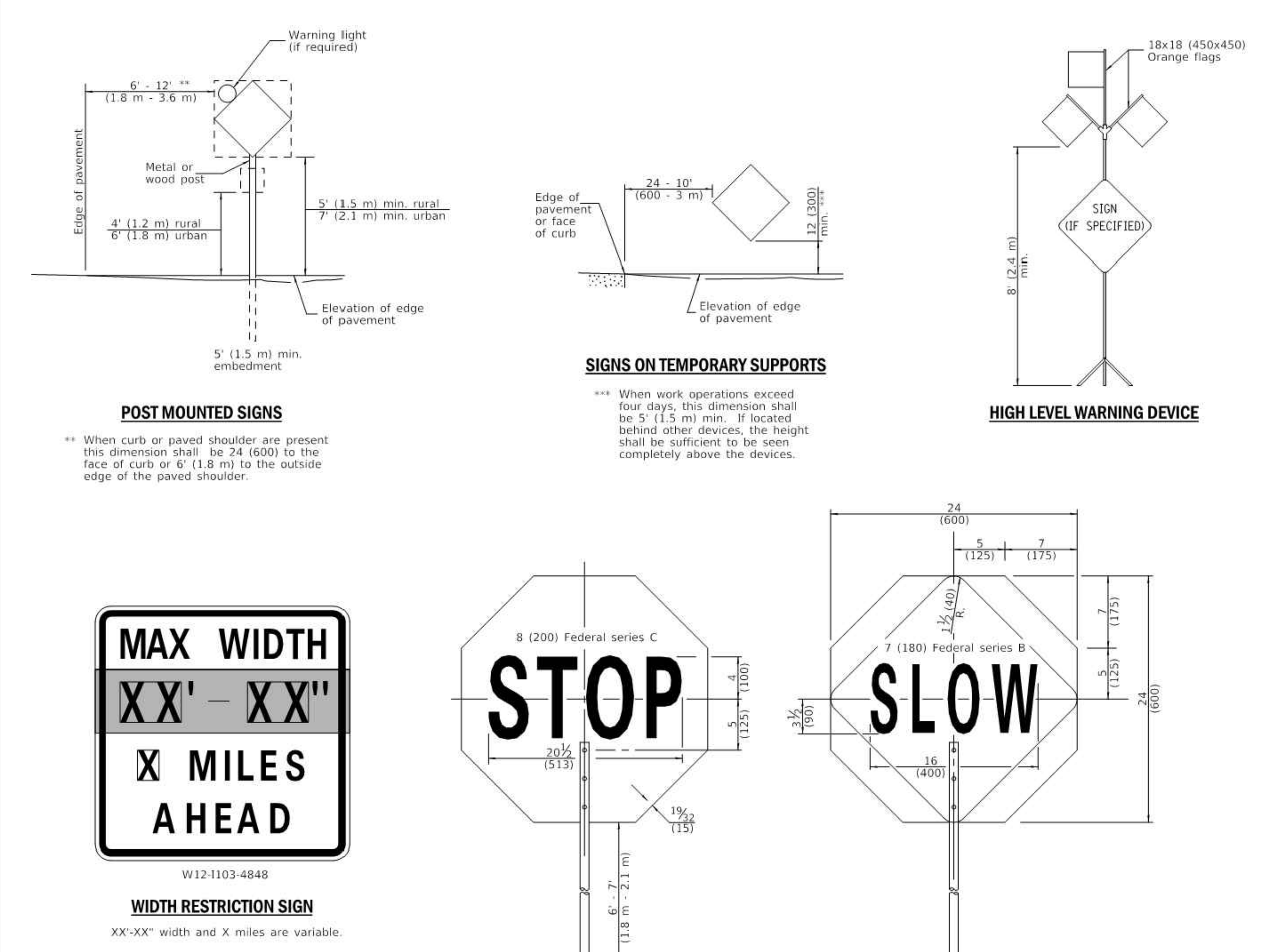

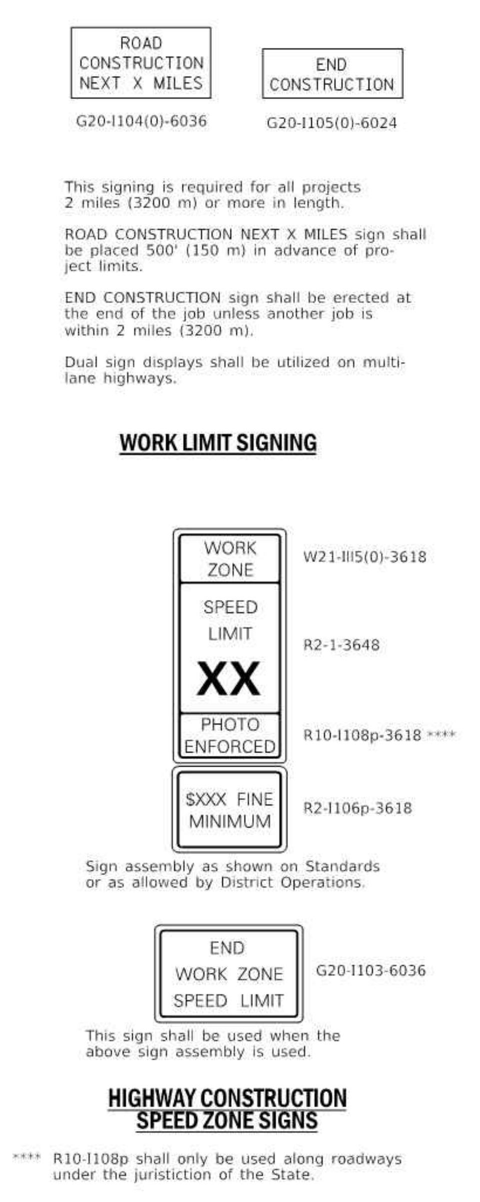

FLAGGER TRAFFIC CONTROL SIGN

Illinois Department of Transportation

APPROVED January 1, 2019 — ENGINEER OF SAFETY PROG. AND ENGINEERING

APPROVED January 1, 2019 — ENGINEER OF DESIGN AND ENVIRONMENT

TRAFFIC CONTROL DEVICES

(Sheet 2 of 3)

STANDARD 701901-08

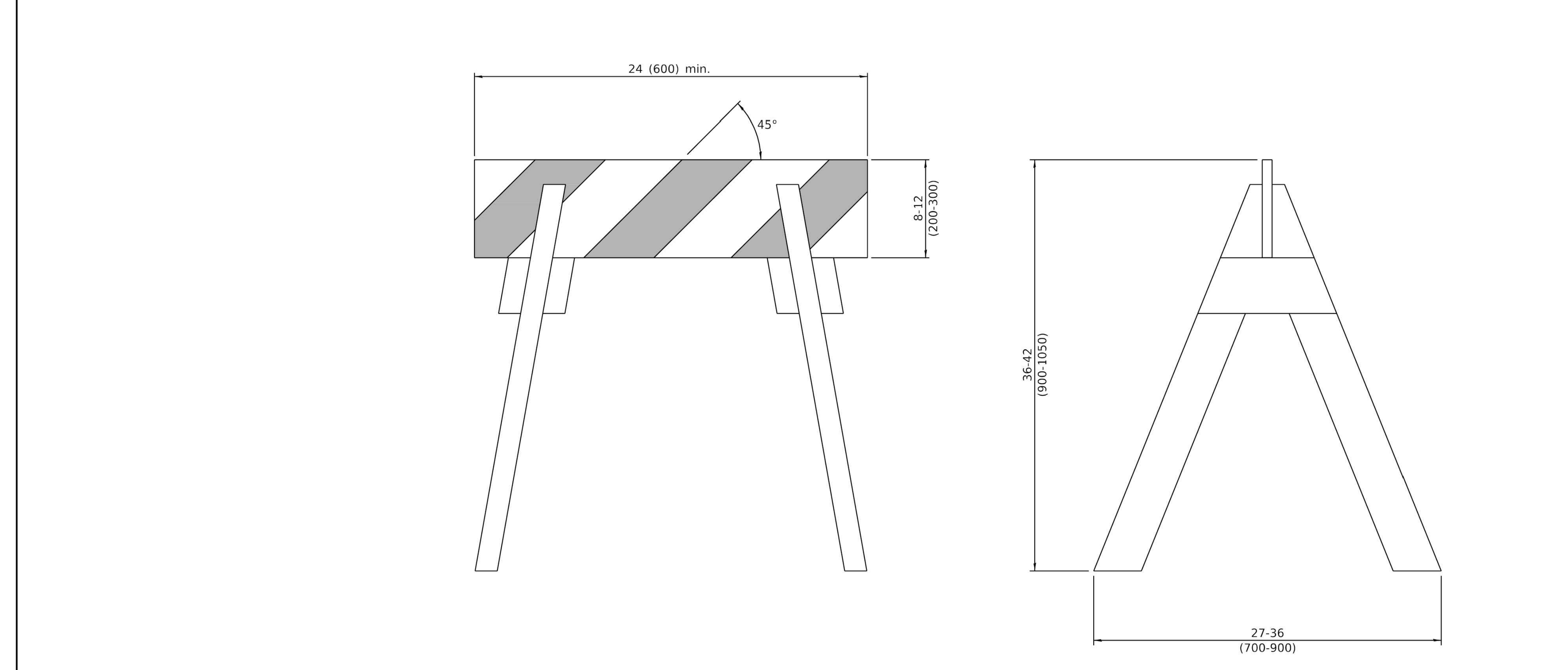

All dimensions are in inches (millimeters) unless otherwise shown.

Illinois Department of Transportation

PASSED January 1, 2009 — ENGINEER OF LOCAL ROADS AND STREETS

APPROVED January 1, 2009 — ENGINEER OF DESIGN AND ENVIRONMENT

DATE	REVISIONS
1-1-09	Switched units to English (metric).
1-1-03	New standard from 702001-02

TYPE 1A BARRICADE FOR NON-NHS ROUTES

STANDARD B.L.R. 25-1

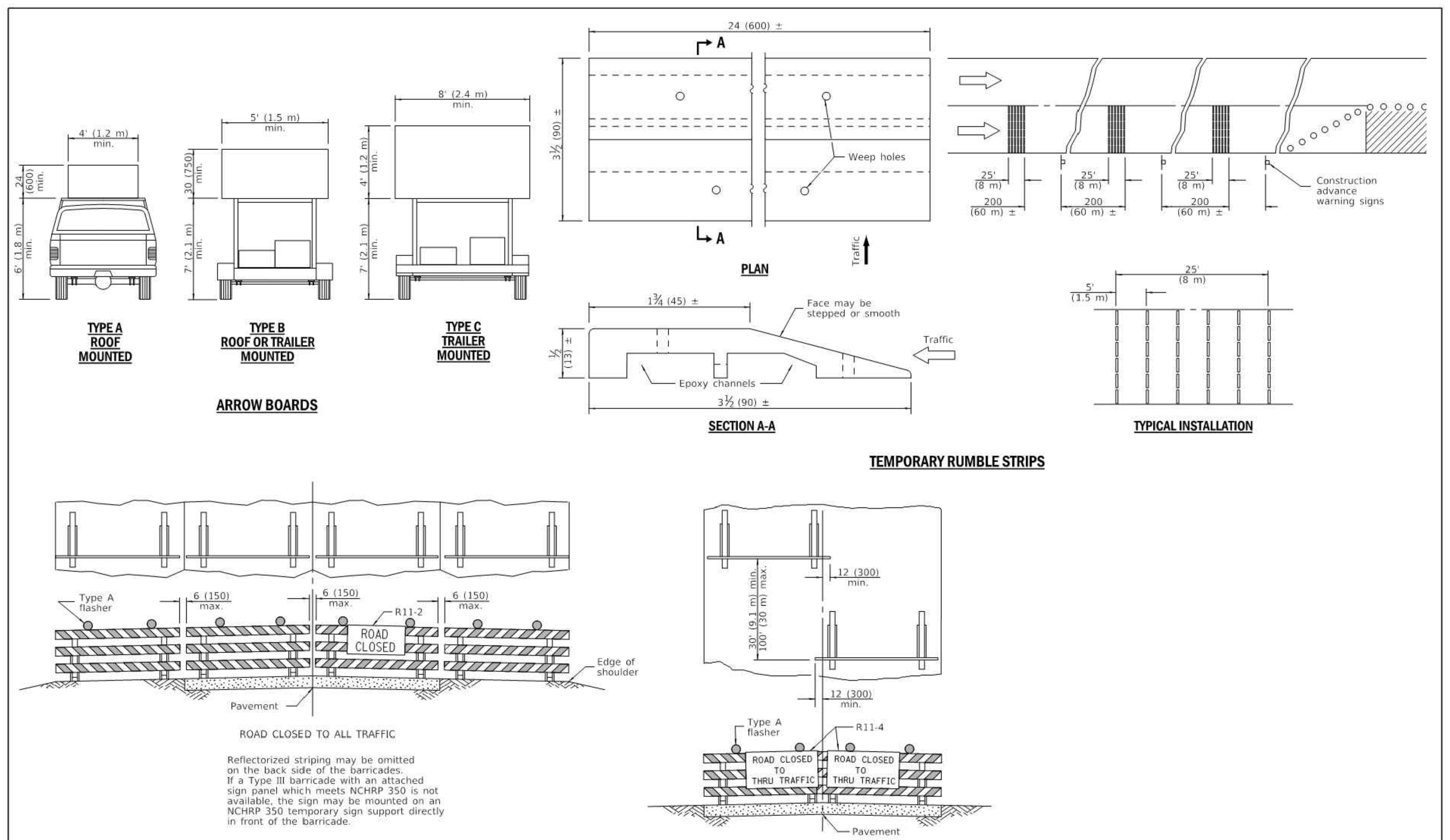

TYPICAL APPLICATIONS OF TYPE III BARRICADES CLOSING A ROAD

Illinois Department of Transportation

APPROVED January 1, 2019 — ENGINEER OF SAFETY PROG. AND ENGINEERING

APPROVED January 1, 2019 — ENGINEER OF DESIGN AND ENVIRONMENT

TRAFFIC CONTROL DEVICES

(Sheet 3 of 3)

STANDARD 701901-08

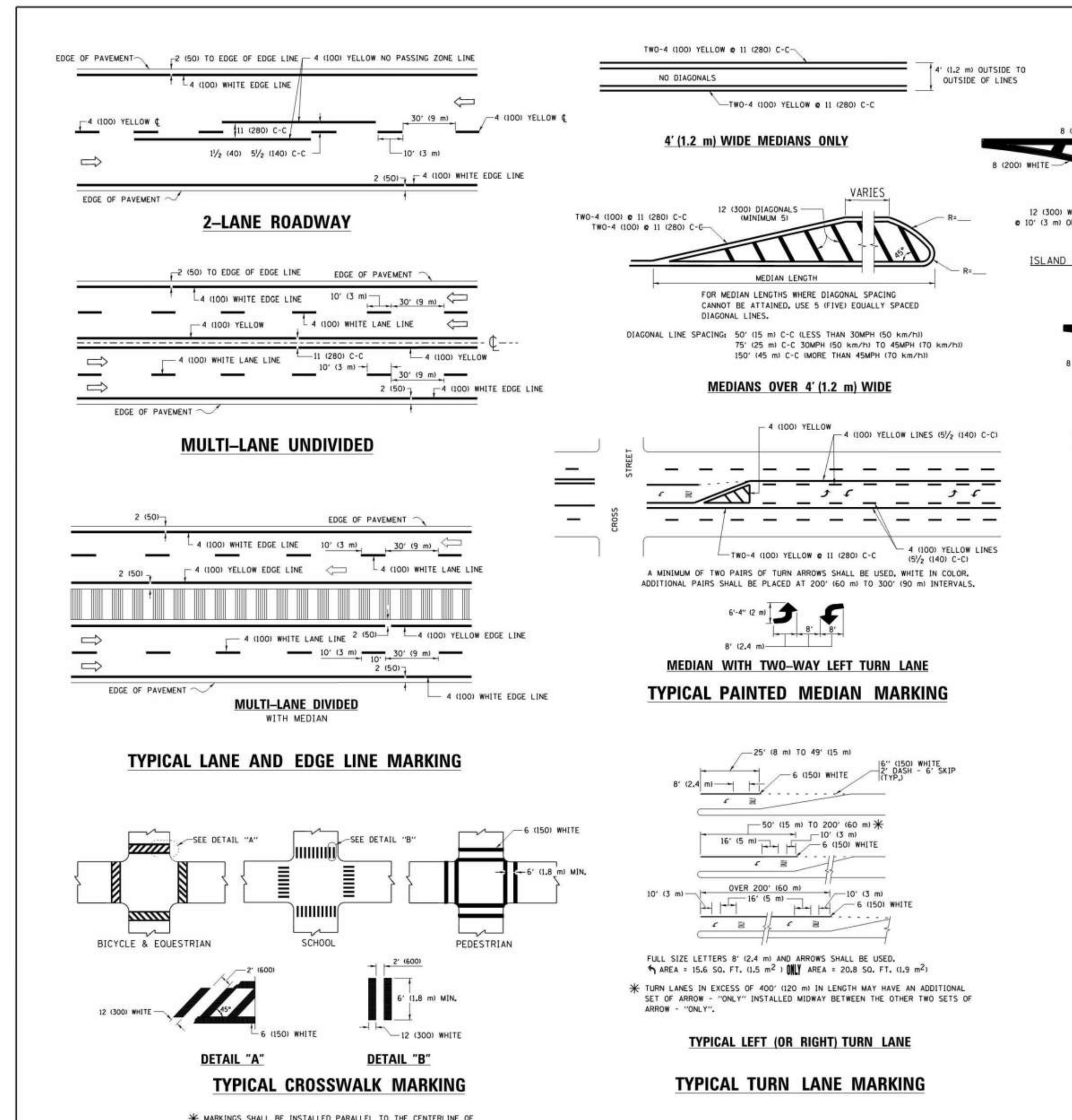

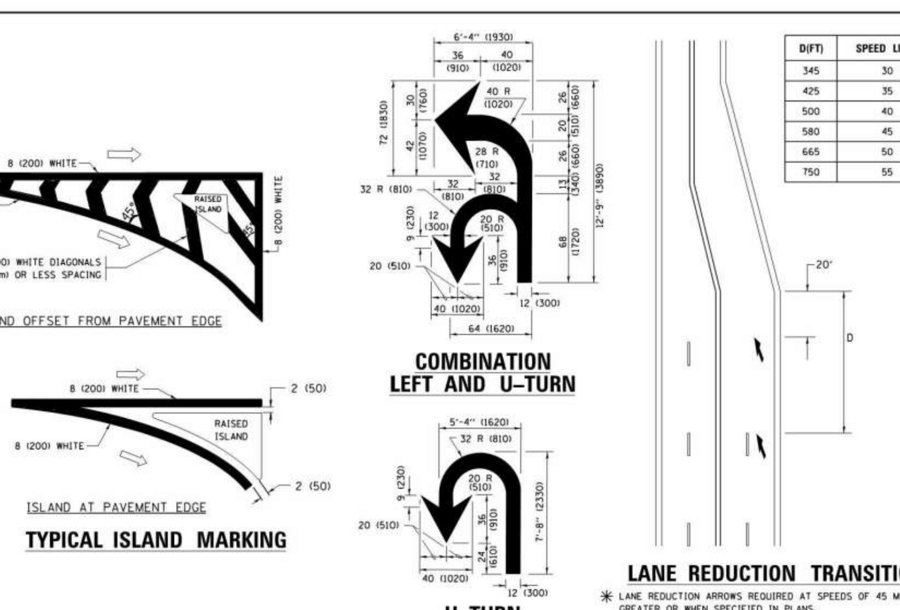

D(FT)	SPEED LIMIT
345	30
425	35
500	40
580	45
665	50
750	55

✱ LANE REDUCTION ARROWS REQUIRED AT SPEEDS OF 45 MPH OR GREATER OR WHEN SPECIFIED IN PLANS.

TYPE OF MARKING	WIDTH OF LINE	PATTERN	COLOR	SPACING /REMARKS
CENTERLINE ON 2 LANE PAVEMENT	4 (100)	SKIP-DASH	YELLOW	10' (3 m) LINE WITH 30' (9 m) SPACE
CENTERLINE ON MULTI-LANE UNDIVIDED PAVEMENT	2 @ 4 (100)	SOLID	YELLOW	11 (280) C-C
NO PASSING ZONE LINES: FOR ONE DIRECTION FOR BOTH DIRECTIONS	4 (100) 2 @ 4 (100)	SOLID SOLID	YELLOW YELLOW	5½ (140) C-C FROM SKIP-DASH CENTERLINE 11 (280) C-C OMIT SKIP-DASH CENTERLINE BETWEEN
LANE LINES	4 (100) 5 (125) ON FREEWAYS	SKIP-DASH SKIP-DASH	WHITE WHITE	10' (3 m) LINE WITH 30' (9 m) SPACE
DOTTED LINES (EXTENSIONS OF CENTER, LANE OR TURN LANE MARKINGS)	SAME AS LINE BEING EXTENDED	SKIP-DASH	SAME AS LINE BEING EXTENDED	2' (600) LINE WITH 6' (1.8 m) SPACE
EDGE LINES	4 (100)	SOLID	YELLOW-LEFT WHITE-RIGHT	OUTLINE MEDIANS IN YELLOW
TURN LANE MARKINGS	6 (150) LINE; FULL SIZE LETTERS & SYMBOLS (8' (2.4m))	SOLID	WHITE	SEE TYPICAL TURN LANE MARKING DETAIL
TWO WAY LEFT TURN MARKING	2 @ 4 (100) EACH DIRECTION 8' (2.4m) LEFT ARROW	SKIP-DASH AND SOLID IN PAIRS	YELLOW WHITE	10' (3 m) LINE WITH 30' (9 m) SPACE FOR SKIP-DASH; 5½ (140) C-C BETWEEN SOLID LINE AND SKIP-DASH LINE SEE TYPICAL TWO-WAY LEFT TURN MARKING DETAIL
CROSSWALK LINES (PEDESTRIAN) A. DIAGONALS (BIKE & EQUESTRIAN) B. LONGITUDINAL BARS (SCHOOL)	2 @ 6 (150) 12 (300) @ 45° 12 (300) @ 90°	SOLID SOLID SOLID	WHITE WHITE WHITE	NOT LESS THAN 6' (1.8 m) APART 2' (600) APART 2' (600) APART SEE TYPICAL CROSSWALK MARKING DETAILS.
STOP LINES	24 (600)	SOLID	WHITE	PLACE 4' (1.2 m) IN ADVANCE OF AND PARALLEL TO CROSSWALK, IF PRESENT. OTHERWISE, PLACE AT DESIRED STOPPING POINT, PARALLEL TO CROSSROAD CENTERLINE, WHERE POSSIBLE
PAINTED MEDIANS	2 @ 4 (100) WITH 12 (300) DIAGONALS @ 45° NO DIAGONALS USED FOR 4' (1.2 m) WIDE MEDIANS	SOLID	YELLOW: TWO WAY TRAFFIC WHITE: ONE WAY TRAFFIC	11 (280) C-C FOR THE DOUBLE LINE SEE TYPICAL PAINTED MEDIAN MARKING.
GORE MARKING AND CHANNELIZING LINES	8 (200) WITH 12 (300) DIAGONALS @ 45°	SOLID	WHITE	DIAGONALS: 15' (4.5 m) C-C (LESS THAN 30MPH (50 km/h)) 20' (6 m) C-C 30MPH (50 km/h) TO 45MPH (70 km/h)) 30' (9 m) C-C (OVER 45MPH (70 km/h))
RAILROAD CROSSING	24 (600) TRANSVERSE LINES; "RR" IS 6' (1.8 m) LETTERS; 16 (400) LINE FOR "X"	SOLID	WHITE	SEE STATE STANDARD 780001 AREA OF: "R"=3.6 SQ. FT. (0.33 m²) EACH "X"=54.0 SQ. FT. (5.0 m²)
SHOULDER DIAGONALS (REQUIRED FOR SHOULDERS ≥ 8')	12 (300) @ 45°	SOLID	WHITE - RIGHT YELLOW - LEFT	50' (15 m) C-C (LESS THAN 30MPH (50 km/h)) 75' (25 m) C-C (30 MPH (50 km/h) TO 45MPH (70 km/h)) 150' (45 m) C-C (OVER 45MPH (70 km/h))
U TURN ARROW	SEE DETAIL	SOLID	WHITE	16.3 SF
2 ARROW COMBINATION LEFT AND U TURN	SEE DETAIL	SOLID	WHITE	30.4 SF

FOR FURTHER DETAILS ON PAVEMENT MARKING REFER TO STANDARD SPECIFICATIONS FOR ROAD AND BRIDGE CONSTRUCTION AND STATE STANDARD 780001.

All dimensions are in inches (millimeters) unless otherwise shown.

STATE OF ILLINOIS DEPARTMENT OF TRANSPORTATION

DISTRICT ONE TYPICAL PAVEMENT MARKINGS

SCALE: NONE — SHEET 1 OF 1 SHEETS — STA. — TO STA.

F.A. RTE.	SECTION	COUNTY	TOTAL SHEETS	SHEET NO.
	TC-13	CONTRACT NO.		
	ILLINOIS FED. AID PROJECT			

NO.	DATE	BY	REVISION DESCRIPTION

HRGreen
ILLINOIS DESIGN FIRM # 184.001322
2363 SEQUOIA DRIVE, SUITE 101
AURORA, IL 60506
PHONE: 630.553.7560
FAX: 630.553.7646

VARIOUS WATER MAIN REPLACEMENT

CLIENT: VILLAGE OF OSWEGO

OSWEGO, IL

FINAL – FOR BIDDING

CONSTRUCTION DETAILS

BAR IS ONE INCH ON OFFICIAL DRAWINGS

0 — 1"

IF NOT ONE INCH, ADJUST SCALE ACCORDINGLY

DRAWN BY: ELC/SAS

APPROVED: DWS

JOB DATE: 03/05/2020

JOB NO: 180055.03

DRAWING

C–19

FINAL – FOR BIDDING

J:\2018\180055\180055.03-Various_Residential_Watermain_Replacement_Areas\CAD\Dwgs\C\180055.03-Details.dwg

Xrefs: xgl-1-dv01

2/27/2020 2:55:17 PM

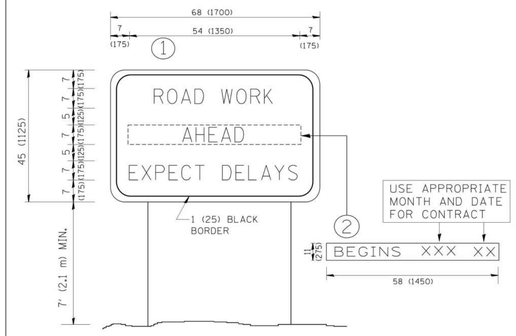

NOTES:

1. USE BLACK LETTERING ON ORANGE BACKGROUND.
2. ERECT SIGNS IN ADVANCE OF THE LOCATION FOR THE "ROAD CONSTRUCTION AHEAD" SIGN AT LOCATIONS AS DIRECTED BY THE ENGINEER.
3. ERECT SIGN 1 WITH INSTALLED PANEL 2 ONE WEEK PRIOR TO THE START OF CONSTRUCTION.
4. REMOVE PANEL 2 SOON AFTER THE START OF CONSTRUCTION.
5. SEE SPECIAL PROVISION FOR "TEMPORARY INFORMATION SIGNING" FOR ADDITIONAL INFORMATION.
6. ONE SIGN ASSEMBLY EQUALS 25.70 SQ. FT. (2.3 SQ. M.)
7. SHALL BE PAID FOR AS TEMPORARY INFORMATION SIGNING.

ALL DIMENSIONS ARE IN INCHES (MILLIMETERS) UNLESS OTHERWISE SHOWN.

FILE NAME = W:\docstore02\2-34\ns22.dgn	USER NAME = gaglianobt	DESIGNED -	REVISED - R. MIRS 09-15-97	STATE OF ILLINOIS DEPARTMENT OF TRANSPORTATION	ARTERIAL ROAD INFORMATION SIGN
		DRAWN -	REVISED - R. MIRS 12-11-97		
	PLOT SCALE = 50.000 ' / IN.	CHECKED -	REVISED - T. RAMMACHER 02-02-99		
	PLOT DATE = 1/4/2000	DATE -	REVISED - C. JUCIUS 01-31-07		SCALE: NONE / SHEET NO. 1 OF 1 SHEETS / STA. / TO STA.

F.A. RTE.	SECTION	COUNTY	TOTAL SHEETS	SHEET NO.
	TC-22			
		CONTRACT NO.		
	FED. ROAD DIST. NO. 9 ILLINOIS	FED. AID PROJECT		

FINAL – FOR BIDDING

NO.	DATE	BY	REVISION DESCRIPTION

ILLINOIS DESIGN FIRM
184.001322
2363 SEQUOIA DRIVE,
SUITE 101
AURORA, IL 60506
PHONE: 630.553.7560
FAX: 630.553.7646

HRGreen

VARIOUS WATER MAIN REPLACEMENT
CLIENT: VILLAGE OF OSWEGO
OSWEGO, IL

FINAL – FOR BIDDING
CONSTRUCTION DETAILS

BAR IS ONE INCH ON OFFICIAL DRAWINGS
0 1"
IF NOT ONE INCH, ADJUST SCALE ACCORDINGLY

DRAWN BY: ELC/SAS
APPROVED: DWS
JOB DATE: 03/05/2020
JOB NO: 180055.03

DRAWING
C-20

J:\2018\180055\180055.03-Various_Residential_Watermain_Replacement_Areas\CAD\Dwgs\C\180055.03-Details.dwg
Xrefs: xgt-1-dx01
2/27/2020 2:55:17 PM

rubino ENGINEERING INC. 425 Shepard Drive Elgin, Illinois 60123	**Project Name:** Sewer Extension and Water Main Replacement **Project Location:** Faro Court, Oswego, Illinois **Client:** Village of Oswego **Rubino Project # :** G19.100	**Boring Location Plan 2**

Appendix C - Soil Classification General Notes

DRILLING & SAMPLING SYMBOLS:

SS:	Split Spoon - 1 3/8" I.D., 2" O.D., unless otherwise noted	PS:	Piston Sample
ST:	Thin-Walled Tube - 3" O.D., Unless otherwise noted	WS:	Wash Sample
PM:	Pressuremeter	HA:	Hand Auger
RB:	Rock Bit	HS:	Hollow Stem Auger
DB:	Diamond Bit - 4", N, B	BS:	Bulk Sample

Standard "N" Penetration: Blows per foot of a 140-pound hammer falling 30 inches on a 2-inch O.D. split spoon sampler (SS), except where noted.

WATER LEVEL MEASUREMENT SYMBOLS:
Water levels indicated on the boring logs are the levels measured in the borings at the times indicated. In pervious soils, the indicated levels may reflect the location of groundwater. In low permeability soils, the accurate determination of ground water levels is not possible with only short-term observations.

DESCRIPTIVE SOIL CLASSIFICATION:
Soil Classification is based on the Unified Soil Classification System as defined in ASTM D-2487 and D-2488. Coarse Grained Soils have more than 50% of their dry weight retained on a #200 sieve; they are described as: boulders, cobbles, gravel or sand. Fine Grained Soils have less than 50% of their dry weight retained on a #200 sieve; they are described as: clays, if they are plastic, and silts if they are slightly plastic or non-plastic. Major constituents may be added as modifiers and minor constituents may be added according to the relative proportions based on grain size. In addition to gradation, coarse grained soils are defined on the basis of their relative in-place density and fine-grained soils on the basis of their consistency. Example: Lean clay with sand, trace gravel, stiff (CL); silty sand, trace gravel, medium dense (SM).

CONSISTENCY OF FINE-GRAINED SOILS:

Unconfined Compressive Strength, Qu (tsf)	N-Blows/ft.	Consistency
< 0.25	< 2	Very Soft
0.25 - 0.5	2 - 4	Soft
0.5 - 1	4 - 8	Medium Stiff
1 - 2	8 - 15	Stiff
2 - 4	15 - 30	Very Stiff
4 - 8	30 - 50	Hard
> - 8	> 50	Very Hard

RELATIVE DENSITY OF COARSE-GRAINED SOILS

N-Blows/ft.	Relative Density
0 - 3	Very Loose
4 - 9	Loose
10 - 29	Medium Dense
30 - 49	Dense
50 - 80	Very Dense
80+	Extremely Dense

RELATIVE PROPORTIONS OF SAND & GRAVEL

Descriptive Term	% of Dry Weight
Trace	< 15
With	15 - 29
Modifier	> 30

GRAIN SIZE TERMINOLOGY

Major Component	Size Range
Boulders	Over 12 in. (300mm)
Cobbles	12 in. To 3 in. (300mm to 75mm)
Gravel	3 in. To #4 sieve (75mm to 4.75mm)
Sand	#4 to #200 sieve (4.75mm to 0.75mm)

RELATIVE PROPORTIONS OF FINES

Descriptive Term	% of Dry Weight
Trace	< 5
With	5 - 12
Modifier	> 12

*Descriptive Terms apply to components also present in sample

rubino ENGINEERING INC.

Appendix D - Soil Classification Chart

SOIL CLASSIFICATION CHART

NOTE: DUAL SYMBOLS ARE USED TO INDICATE BORDERLINE SOIL CLASSIFICATIONS

MAJOR DIVISIONS			SYMBOLS GRAPH	SYMBOLS LETTER	TYPICAL DESCRIPTIONS
COARSE GRAINED SOILS	GRAVEL AND GRAVELLY SOILS	CLEAN GRAVELS (LITTLE OR NO FINES)		GW	WELL-GRADED GRAVELS, GRAVEL - SAND MIXTURES, LITTLE OR NO FINES
				GP	POORLY-GRADED GRAVELS, GRAVEL - SAND MIXTURES, LITTLE OR NO FINES
	MORE THAN 50% OF COARSE FRACTION RETAINED ON NO. 4 SIEVE	GRAVELS WITH FINES (APPRECIABLE AMOUNT OF FINES)		GM	SILTY GRAVELS, GRAVEL - SAND - SILT MIXTURES
				GC	CLAYEY GRAVELS, GRAVEL - SAND - CLAY MIXTURES
MORE THAN 50% OF MATERIAL IS LARGER THAN NO. 200 SIEVE SIZE	SAND AND SANDY SOILS	CLEAN SANDS (LITTLE OR NO FINES)		SW	WELL-GRADED SANDS, GRAVELLY SANDS, LITTLE OR NO FINES
				SP	POORLY-GRADED SANDS, GRAVELLY SAND, LITTLE OR NO FINES
	MORE THAN 50% OF COARSE FRACTION PASSING ON NO. 4 SIEVE	SANDS WITH FINES (APPRECIABLE AMOUNT OF FINES)		SM	SILTY SANDS, SAND - SILT MIXTURES
				SC	CLAYEY SANDS, SAND - CLAY MIXTURES
FINE GRAINED SOILS	SILTS AND CLAYS	LIQUID LIMIT LESS THAN 50		ML	INORGANIC SILTS AND VERY FINE SANDS, ROCK FLOUR, SILTY OR CLAYEY FINE SANDS OR CLAYEY SILTS WITH SLIGHT PLASTICITY
				CL	INORGANIC CLAYS OF LOW TO MEDIUM PLASTICITY, GRAVELLY CLAYS, SANDY CLAYS, SILTY CLAYS, LEAN CLAYS
				OL	ORGANIC SILTS AND ORGANIC SILTY CLAYS OF LOW PLASTICITY
MORE THAN 50% OF MATERIAL IS SMALLER THAN NO. 200 SIEVE SIZE	SILTS AND CLAYS	LIQUID LIMIT GREATER THAN 50		MH	INORGANIC SILTS, MICACEOUS OR DIATOMACEOUS FINE SAND OR SILTY SOILS
				CH	INORGANIC CLAYS OF HIGH PLASTICITY
				OH	ORGANIC CLAYS OF MEDIUM TO HIGH PLASTICITY, ORGANIC SILTS
HIGHLY ORGANIC SOILS				PT	PEAT, HUMUS, SWAMP SOILS WITH HIGH ORGANIC CONTENTS

rubino ENGINEERING INC.

LOG OF BORING F-01

rubino ENGINEERING INC.
Rubino Engineering, Inc.
425 Shepard Drive
Elgin, IL 60123
Telephone: 847-931-1555
Fax: 847-931-1560

Sheet 1 of 1

Rubino Job No.:	G19.100	Drilling Method:	3 ¼ Hollow Stem Auger
Project:	Sewer Extension and Water Main Replacment	Sampling Method:	Split Spoon
Location:	Wooley Road and Faro Court	Hammer Type:	Automatic
City, State:	Oswego, Illinois 60543	Boring Location:	Faro Court
Client:	Village of Oswego		2 ft N from edge of pavement

WATER LEVELS***

While Drilling	N/A
Upon Completion	N/A
Delay	N/A

Station: N/A
Offset: N/A

Elevation (feet)	Depth (feet)	Graphic Log	Sample Type	Sample No.	Recovery (inches)	MATERIAL DESCRIPTION	USCS Classification	SPT Blows per 6-inch	Moisture, %	STANDARD PENETRATION TEST DATA (Moisture, PL, LL; STRENGTH, tsf: Qu, Qp)	Additional Remarks
	0					Approximately 12 inches of ASPHALT					
				1	14	FILL; brown sand and gravel		20 12 5 N=17	5		
						Stiff, brown and gray mottled silty CLAY, trace sand and gravel	CL		24		
	5			2	10			2 3 5 N=8	17		Qp=2.5 tsf
				3	4	Weathered Limestone *Possible Bedrock*		50/5"	2	>>	

Auger and spoon refusal at approximately 6 feet 1 inch below exisitng grade.
End of boring at approximately 6 feet 1 inch below existing grade.
No free groundwater encountered during drilling operations.

Completion Depth:	6.1 ft	Sample Types:	Pressuremeter	Latitude: 41.679267
Date Boring Started:	8/15/19	Auger Cutting	Shelby Tube	Longitude: -88.349362
Date Boring Completed:	8/15/19	Split-Spoon	Hand Auger	Drill Rig: Geoprobe 7822DT
Logged By:	S.R.	Rock Core	No Recovery	Remarks:
Drilling Contractor:	Rubino Engineering, Inc.			

The stratification lines represent approximate boundaries. The transition may be gradual.
***Please reference the geotechnical report text for specific groundwater / dewatering recommendations.

FINAL – FOR BIDDING

NO.	DATE	BY	REVISION DESCRIPTION

ILLINOIS DESIGN FIRM
184.001322
2363 SEQUOIA DRIVE,
SUITE 101
AURORA, IL 60506
PHONE: 630.553.7560
FAX: 630.553.7646
HRGreen

VARIOUS WATER MAIN REPLACEMENT
CLIENT: VILLAGE OF OSWEGO
OSWEGO, IL

FINAL – FOR BIDDING
TEST HOLE BORING

BAR IS ONE INCH ON OFFICIAL DRAWINGS
0 1"
IF NOT ONE INCH, ADJUST SCALE ACCORDINGLY

DRAWN BY: ELC/SAS
APPROVED: DWS
JOB DATE: 03/05/2020
JOB NO: 180055.03

DRAWING
C-21

J:\2018\180055\180055.03-Various_Residential_Watermain_Replacement_Areas\CAD\Dwgs\C\180055.03-Details.dwg
Xrefs: xgt-1-dv01
2/27/2020 2:55:17 PM