RETURN WITH BID

Local Public Agency
Formal Contract Proposal

PROPOSAL SUBMITTED BY		
Contractor's Name		
Street		P.O. Box
City	State	Zip Code

STATE OF ILLINOIS

COUNTY OF Kendall

Village of Oswego

(Name of ~~City~~, Village, ~~Town or Road District~~)

FOR THE IMPROVEMENT OF

STREET NAME OR ROUTE NO. Main Street and Tyler Street over Bartlett Creek Culvert Repairs

SECTION NO.

TYPES OF FUNDS Local

☒ SPECIFICATIONS (required) ☒ PLANS (required)

For Municipal Projects

Submitted/Approved/Passed

☐ Mayor ☐ President of Board of Trustees ☒ Municipal Official

Date

Department of Transportation

☐ Released for bid based on limited review

Regional Engineer

Date

For County and Road District Projects

Submitted/Approved

Highway Commissioner

Date

Submitted/Approved

County Engineer/Superintendent of Highways

Date

Note: All proposal documents, including Proposal Guaranty Checks or Proposal Bid Bonds, should be stapled together to prevent loss when bids are processed.

RETURN WITH BID

NOTICE TO BIDDERS

County: Kendall
Local Public Agency: Village of Oswego
Section Number:
Route: Main Street and Tyler Street

Sealed proposals for the improvement described below will be received at the office of Village of Oswego,
100 Parkers Mill, Oswego, IL, 60543 (Address) until 10:00 AM (Time) on August 25, 2015 (Date)

Sealed proposals will be opened and read publicly at the office of Village of Oswego
100 Parkers Mill, Oswego, IL, 60543 (Address) at 10:00 AM (Time) on August 25, 2015 (Date)

DESCRIPTION OF WORK

Name: Main Street and Tyler Street Culvert Repairs Length: 76 feet (0.02 miles)
Location: Main Street and Tyler Street Culverts Crossings over Bartlett Creek
Proposed Improvement: Consists of pavement removal, concrete structures, insertion culvert liner, box culvert end section pavement replacement, erosion control and restoration.

1. Plans and proposal forms will be available in the office of Village of Oswego, 100 Parkers Mill, Oswego, IL, 60543 (Village Hall), for no charge, or at www.oswegoil.org (Address)
2. ☐ Prequalification
   If checked, the 2 low bidders must file within 24 hours after the letting an "Affidavit of Availability" (Form BC 57), in duplicate, showing all uncompleted contracts awarded to them and all low bids pending award for Federal, State, County, Municipal and private work. One original shall be filed with the Awarding Authority.
3. The Awarding Authority reserves the right to waive technicalities and to reject any or all proposals as provided in BLRS Special Provision for Bidding Requirements and Conditions for Contract Proposals.
4. The following BLR Forms shall be returned by the bidder to the Awarding Authority:
   a. BLR 12200: Local Public Agency Formal Contract Proposal
   b. BLR 12200a Schedule of Prices
   c. BLR 12230: Proposal Bid Bond (if applicable)
   d. BLR 12325: Apprenticeship or Training Program Certification
   e. BLR 12326: Affidavit of Illinois Business Office
5. The quantities appearing in the bid schedule are approximate and are prepared for the comparison of bids. Payment to the Contractor will be made only for the actual quantities of work performed and accepted or materials furnished according to the contract. The scheduled quantities of work to be done and materials to be furnished may be increased, decreased or omitted as hereinafter provided.
6. Submission of a bid shall be conclusive assurance and warranty the bidder has examined the plans and understands all requirements for the performance of work. The bidder will be responsible for all errors in the proposal resulting from failure or neglect to conduct an in depth examination. The Awarding Authority will, in no case be responsible for any costs, expenses, losses or changes in anticipated profits resulting from such failure or neglect of the bidder.
7. The bidder shall take no advantage of any error or omission in the proposal and advertised contract.
8. If a special envelope is supplied by the Awarding Authority, each proposal should be submitted in that envelope furnished by the Awarding Agency and the blank spaces on the envelope shall be filled in correctly to clearly indicate its contents. When an envelope other than the special one furnished by the Awarding Authority is used, it shall be marked to clearly indicate its contents. When sent by mail, the sealed proposal shall be addressed to the Awarding Authority at the address and in care of the official in whose office the bids are to be received. All proposals shall be filed prior to the time and at the place specified in the Notice to Bidders. Proposals received after the time specified will be returned to the bidder unopened.
9. Permission will be given to a bidder to withdraw a proposal if the bidder makes the request in writing or in person before the time for opening proposals.
10. Contractors shall submit with their bid at least three examples of similar projects completed in the last 5 years with references including; name, phone number, and address.

RETURN WITH BID

PROPOSAL

County Kendall
Local Public Agency Village of Oswego
Section Number
Route Main Street and Tyler Street

1. Proposal of Main Street and Tyler Street over Bartlett Creek Culvert Repairs

   for the improvement of the above section by the construction of proposed improvements which consists of pavement removal, concrete structures, insertion culvert liner, box culvert end section pavement replacement, erosion control and restoration.

   a total distance of 76 feet, of which a distance of 76 feet, (0.02 miles) are to be improved.
2. The plans for the proposed work are those prepared by HR Green, Inc.
3. The specifications referred to herein are those prepared by the Department of Transportation and designated as "Standard Specifications for Road and Bridge Construction" and the "Supplemental Specifications and Recurring Special Provisions" thereto, adopted and in effect on the date of invitation for bids.
4. The undersigned agrees to accept, as part of the contract, the applicable Special Provisions indicated on the "Check Sheet for Recurring Special Provisions" contained in this proposal.
5. The undersigned agrees to complete the work within _____ working days or by October 16, 2015 unless additional time is granted in accordance with the specifications.
6. A proposal guaranty in the proper amount, as specified in BLRS Special Provision for Bidding Requirements and Conditions for Contract Proposals, will be required. Bid Bonds will be allowed as a proposal guaranty. Accompanying this proposal is either a bid bond if allowed, on Department form BLR 12230 or a proposal guaranty check, complying with the specifications, made payable to:

   Village of Oswego Treasurer of _____

   The amount of the check is _____ (_____).
7. In the event that one proposal guaranty check is intended to cover two or more proposals, the amount must be equal to the sum of the proposal guaranties, which would be required for each individual proposal. If the proposal guaranty check is placed in another proposal, it will be found in the proposal for: Section Number (Not Applicable).
8. The successful bidder at the time of execution of the contract will be required to deposit a contract bond for the full amount of the award. When a contract bond is not required, the proposal guaranty check will be held in lieu thereof. If this proposal is accepted and the undersigned fails to execute a contract and contract bond as required, it is hereby agreed that the Bid Bond or check shall be forfeited to the Awarding Authority.
9. Each pay item should have a unit price and a total price. If no total price is shown or if there is a discrepancy between the product of the unit price multiplied by the quantity, the unit price shall govern. If a unit price is omitted, the total price will be divided by the quantity in order to establish a unit price.
10. A bid will be declared unacceptable if neither a unit price nor a total price is shown.
11. The undersigned submits herewith the schedule of prices on BLR 12200a covering the work to be performed under this contract.
12. The undersigned further agrees that if awarded the contract for the sections contained in the combinations on BLR 12200a, the work shall be in accordance with the requirements of each individual proposal for the multiple bid specified in the Schedule for Multiple Bids below.

RETURN WITH BID

SCHEDULE OF PRICES

County Kendall
Local Public Agency Village of Oswego
Section
Route Main Street and Tyler Street

Schedule for Multiple Bids

Combination Letter	Sections Included in Combinations	Total

Schedule for Single Bid

(For complete information covering these items, see plans and specifications)

Bidder's Proposal for making Entire Improvements

Item No.	Items	Unit	Quantity	Unit Price	Total
1	Class D Patches, Type III, 6 Inch	SQ YD	22.2		
2	Terminal Marker - Direct Applied	EACH	4		
3	Concrete Removal	CU YD	3.5		
4	Box Culvert End Sections, Culvert No. 1	EACH	1		
5	Insertion Culvert Liner 60"	FOOT	54		
6	Long-Span Guardrail Over Culvert, 12 Ft 6 In Span	FOOT	25		
7	Traffic Barrier Terminal, Type 1 (Special) Tangent	EACH	1		
8	Mobilization	L SUM	1		
9	Traffic Barrier Terminal, Type 1	EACH	3		
	Total of Base Bid Section				

CONTRACTOR CERTIFICATIONS

County: Kendall
Local Public Agency: Village of Oswego
Section Number:
Route: Main Street and Tyler Street

The certifications hereinafter made by the bidder are each a material representation of fact upon which reliance is placed should the Department enter into the contract with the bidder.

1. **Debt Deliquency.** The bidder or contractor or subcontractor, respectively, certifies that it is not delinquent in the payment of any tax administered by the Department of Revenue unless the individual or other entity is contesting, in accordance with the procedures established by the appropriate revenue Act, its liability for the tax or the amount of tax. Making a false statement voids the contract and allows the Department to recover all amounts paid to the individual or entity under the contract in a civil action.

2. **Bid-Rigging or Bid Rotating.** The bidder or contractor or subcontractor, respectively, certifies that it is not barred from contracting with the Department by reason of a violation of either 720 ILCS 5/33E-3 or 720 ILCS 5/33E-4.

   A violation of Section 33E-3 would be represented by a conviction of the crime of bid-rigging which, in addition to Class 3 felony sentencing, provides that any person convicted of this offense or any similar offense of any state or the United States which contains the same elements as this offense shall be barred for 5 years from the date of conviction from contracting with any unit of State or local government. No corporation shall be barred from contracting with any unit of State or local government as a result of a conviction under this Section of any employee or agent of such corporation if the employee so convicted is no longer employed by the corporation and: (1) it has been finally adjudicated not guilty or (2) if it demonstrates to the governmental entity with which it seeks to contract and that entity finds that the commission of the offense was neither authorized, requested, commanded, nor performed by a director, officer or a high managerial agent in behalf of the corporation.

   A violation of Section 33E-4 would be represented by a conviction of the crime of bid-rotating which, in addition to Class 2 felony sentencing, provides that any person convicted of this offense or any similar offense of any state or the United States which contains the same elements as this offense shall be permanently barred from contracting with any unit of State or local government. No corporation shall be barred from contracting with any unit of State or local government as a result of a conviction under this Section of any employee or agent of such corporation if the employee so convicted is no longer employed by the corporation and: (1) it has been finally adjudicated not guilty or (2) if it demonstrates to the governmental entity with which it seeks to contract and that entity finds that the commission of the offense was neither authorized, requested, commanded, nor performed by a director, officer or a high managerial agent in behalf of the corporation.

3. **Bribery.** The bidder or contractor or subcontractor, respectively, certifies that it has not been convicted of bribery or attempting to bribe an officer or employee of the State of Illinois or any unit of local government, nor has the firm made an admission of guilt of such conduct which is a matter of record, nor has an official, agent, or employee of the firm committed bribery or attempted bribery on behalf of the firm and pursuant to the direction or authorization of a responsible official of the firm.

4. **Interim Suspension or Suspension.** The bidder or contractor or subcontractor, respectively, certifies that it is not currently under a suspension as defined in Subpart I of Title 44 Subtitle A Chapter III Part 6 of the Illinois Administrative Code. Furthermore, if suspended prior to completion of this work, the contract or contracts executed for the completion of this work may be cancelled.

RETURN WITH BID

County Kendall
Local Public Agency Village of Oswego
Section Number
Route Main Street and Tyler Street

SIGNATURES

(If an individual)

Signature of Bidder _____

Business Address _____

(If a partnership)

Firm Name _____

Signed By _____

Business Address _____

Inset Names and Addressed of All Partners _____

(If a corporation)

Corporate Name _____

Signed By _____
President

Business Address _____

Insert Names of Officers
President _____
Secretary _____
Treasurer _____

Attest: _____
Secretary

Local Agency Proposal Bid Bond

Route: Main and Tyler Street
County: Kendall
Local Agency: Village of Oswego
Section: _____

RETURN WITH BID

PAPER BID BOND

WE _____ as PRINCIPAL,

and _____ as SURETY,

are held jointly, severally and firmly bound unto the above Local Agency (hereafter referred to as "LA") in the penal sum of 5% of the total bid price, or for the amount specified in the proposal documents in effect on the date of invitation for bids whichever is the lesser sum. We bind ourselves, our heirs, executors, administrators, successors, and assigns, jointly pay to the LA this sum under the conditions of this instrument.

WHEREAS THE CONDITION OF THE FOREGOING OBLIGATION IS SUCH that, the said PRINCIPAL is submitting a written proposal to the LA acting through its awarding authority for the construction of the work designated as the above section.

THEREFORE if the proposal is accepted and a contract awarded to the PRINCIPAL by the LA for the above designated section and the PRINCIPAL shall within fifteen (15) days after award enter into a formal contract, furnish surety guaranteeing the faithful performance of the work, and furnish evidence of the required insurance coverage, all as provided in the "Standard Specifications for Road and Bridge Construction" and applicable Supplemental Specifications, then this obligation shall become void; otherwise it shall remain in full force and effect.

IN THE EVENT the LA determines the PRINCIPAL has failed to enter into a formal contract in compliance with any requirements set forth in the preceding paragraph, then the LA acting through its awarding authority shall immediately be entitled to recover the full penal sum set out above, together with all court costs, all attorney fees, and any other expense of recovery.

IN TESTIMONY WHEREOF, the said PRINCIPAL and the said SURETY have caused this instrument to be signed by their respective officers this _____ day of _____

Principal

_____ (Company Name) _____ (Company Name)

By: _____ (Signature and Title) By: _____ (Signature and Title)

(If PRINCIPLE is a joint venture of two or more contractors, the company names, and authorized signatures of each contractor must be affixed.)

Surety

_____ (Name of Surety) By: _____ (Signature of Attorney-in-Fact)

STATE OF ILLINOIS,
COUNTY OF _____

I. _____, a Notary Public in and for said county,
do hereby certify that _____
(Insert names of individuals signing on behalf of PRINCIPAL & SURETY)

who are each personally known to me to be the same persons whose names are subscribed to the foregoing instrument on behalf of PRINCIPAL and SURETY, appeared before me this day in person and acknowledged respectively, that they signed and delivered said instruments as their free and voluntary act for the uses and purposes therein set forth.

Given under my hand and notarial seal this _____ day of _____

My commission expires _____ _____ (Notary Public)

ELECTRONIC BID BOND

☐ **Electronic bid bond is allowed (box must be checked by LA if electronic bid bond is allowed)**

The Principal may submit an electronic bid bond, in lieu of completing the above section of the Proposal Bid Bond Form. By providing an electronic bid bond ID code and signing below, the Principal is ensuring the identified electronic bid bond has been executed and the Principal and Surety are firmly bound unto the LA under the conditions of the bid bond as shown above. (If PRINCIPAL is a joint venture of two or more contractors, an electronic bid bond ID code, company/Bidder name title and date must be affixed for each contractor in the venture.)

Electronic Bid Bond ID Code

_____ (Company/Bidder Name)

_____ (Signature and Title) _____ Date

BLR 12230 (Rev. 7/05

Kendall County Prevailing Wage for April 2015

(See explanation of column headings at bottom of wages)

Trade Name	RG	TYP	C	Base	FRMAN	M-F>8	OSA	OSH	H/W	Pensn	Vac	Trng
ASBESTOS ABT-GEN		ALL		38.200	38.700	1.5	1.5	2.0	13.42	10.48	0.000	0.500
ASBESTOS ABT-MEC		BLD		35.100	37.600	1.5	1.5	2.0	11.17	10.76	0.000	0.720
BOILERMAKER		BLD		45.650	49.760	2.0	2.0	2.0	6.970	17.81	0.000	0.400
BRICK MASON		BLD		42.580	46.840	1.5	1.5	2.0	9.850	13.60	0.000	1.030
CARPENTER		ALL		42.520	44.520	1.5	1.5	2.0	13.29	12.76	0.000	0.630
CEMENT MASON		ALL		42.900	44.900	2.0	1.5	2.0	9.900	16.32	0.000	0.500
CERAMIC TILE FNSHER		BLD		35.810	0.000	1.5	1.5	2.0	10.55	8.440	0.000	0.710
COMMUNICATION TECH		BLD		38.620	40.720	1.5	1.5	2.0	10.19	10.81	0.000	1.350
ELECTRIC PWR EQMT OP		ALL		37.890	51.480	1.5	1.5	2.0	5.000	11.75	0.000	0.380
ELECTRIC PWR EQMT OP		HWY		39.220	53.290	1.5	1.5	2.0	5.000	12.17	0.000	0.390
ELECTRIC PWR GRNDMAN		ALL		29.300	51.480	1.5	1.5	2.0	5.000	9.090	0.000	0.290
ELECTRIC PWR GRNDMAN		HWY		30.330	53.290	1.5	1.5	2.0	5.000	9.400	0.000	0.300
ELECTRIC PWR LINEMAN		ALL		45.360	51.480	1.5	1.5	2.0	5.000	14.06	0.000	0.450
ELECTRIC PWR LINEMAN		HWY		46.950	53.290	1.5	1.5	2.0	5.000	14.56	0.000	0.470
ELECTRIC PWR TRK DRV		ALL		30.340	51.480	1.5	1.5	2.0	5.000	9.400	0.000	0.300
ELECTRIC PWR TRK DRV		HWY		31.400	53.290	1.5	1.5	2.0	5.000	9.730	0.000	0.310
ELECTRICIAN		BLD		45.950	50.550	1.5	1.5	2.0	10.57	12.87	0.000	1.610
ELEVATOR CONSTRUCTOR		BLD		50.800	57.150	2.0	2.0	2.0	13.57	14.21	4.060	0.600
FENCE ERECTOR		ALL		45.060	48.660	2.0	2.0	2.0	10.52	18.81	0.000	0.400
GLAZIER		BLD		40.000	41.500	1.5	2.0	2.0	12.49	15.99	0.000	0.940
HT/FROST INSULATOR		BLD		48.450	50.950	1.5	1.5	2.0	11.47	12.16	0.000	0.720
IRON WORKER		ALL		45.060	48.660	2.0	2.0	2.0	10.52	18.81	0.000	0.400
LABORER		ALL		38.000	38.750	1.5	1.5	2.0	13.42	10.48	0.000	0.500
LATHER		ALL		42.520	44.520	1.5	1.5	2.0	13.29	12.76	0.000	0.630
MACHINIST		BLD		44.350	46.850	1.5	1.5	2.0	6.760	8.950	1.850	0.000
MARBLE FINISHERS		ALL		31.400	32.970	1.5	1.5	2.0	9.850	13.10	0.000	0.600
MARBLE MASON		BLD		41.780	45.960	1.5	1.5	2.0	9.850	13.42	0.000	0.760
MATERIAL TESTER I		ALL		28.000	0.000	1.5	1.5	2.0	13.42	10.48	0.000	0.500
MATERIALS TESTER II		ALL		33.000	0.000	1.5	1.5	2.0	13.42	10.48	0.000	0.500
MILLWRIGHT		ALL		42.520	44.520	1.5	1.5	2.0	13.29	12.76	0.000	0.630
OPERATING ENGINEER		BLD	1	47.100	51.100	2.0	2.0	2.0	17.10	11.80	1.900	1.250
OPERATING ENGINEER		BLD	2	45.800	51.100	2.0	2.0	2.0	17.10	11.80	1.900	1.250
OPERATING ENGINEER		BLD	3	43.250	51.100	2.0	2.0	2.0	17.10	11.80	1.900	1.250
OPERATING ENGINEER		BLD	4	41.500	51.100	2.0	2.0	2.0	17.10	11.80	1.900	1.250
OPERATING ENGINEER		BLD	5	50.850	51.100	2.0	2.0	2.0	17.10	11.80	1.900	1.250
OPERATING ENGINEER		BLD	6	48.100	51.100	2.0	2.0	2.0	17.10	11.80	1.900	1.250
OPERATING ENGINEER		BLD	7	50.100	51.100	2.0	2.0	2.0	17.10	11.80	1.900	1.250
OPERATING ENGINEER		FLT		35.000	35.000	1.5	1.5	2.0	16.60	11.05	1.900	1.250
OPERATING ENGINEER		HWY	1	45.300	49.300	1.5	1.5	2.0	17.10	11.80	1.900	1.250
OPERATING ENGINEER		HWY	2	44.750	49.300	1.5	1.5	2.0	17.10	11.80	1.900	1.250
OPERATING ENGINEER		HWY	3	42.700	49.300	1.5	1.5	2.0	17.10	11.80	1.900	1.250
OPERATING ENGINEER		HWY	4	41.300	49.300	1.5	1.5	2.0	17.10	11.80	1.900	1.250
OPERATING ENGINEER		HWY	5	40.100	49.300	1.5	1.5	2.0	17.10	11.80	1.900	1.250
OPERATING ENGINEER		HWY	6	48.300	49.300	1.5	1.5	2.0	17.10	11.80	1.900	1.250
OPERATING ENGINEER		HWY	7	46.300	49.300	1.5	1.5	2.0	17.10	11.80	1.900	1.250
ORNAMNTL IRON WORKER		ALL		45.060	48.660	2.0	2.0	2.0	10.52	18.81	0.000	0.400
PAINTER		ALL		41.730	43.730	1.5	1.5	1.5	10.30	8.200	0.000	1.350
PAINTER SIGNS		BLD		33.920	38.090	1.5	1.5	1.5	2.600	2.710	0.000	0.000
PILEDRIVER		ALL		42.520	44.520	1.5	1.5	2.0	13.29	12.76	0.000	0.630
PIPEFITTER		BLD		46.000	49.000	1.5	1.5	2.0	9.000	15.85	0.000	1.780
PLASTERER		BLD		42.250	44.790	1.5	1.5	2.0	11.40	12.19	0.000	0.650
PLUMBER		BLD		46.650	48.650	1.5	1.5	2.0	13.18	11.46	0.000	0.880
ROOFER		BLD		40.100	43.100	1.5	1.5	2.0	8.280	10.54	0.000	0.530
SHEETMETAL WORKER		BLD		44.000	46.000	1.5	1.5	2.0	10.65	13.06	0.000	0.820
SPRINKLER FITTER		BLD		49.200	51.200	1.5	1.5	2.0	11.75	9.650	0.000	0.550
STEEL ERECTOR		ALL		45.060	48.660	2.0	2.0	2.0	10.52	18.81	0.000	0.400
STONE MASON		BLD		42.580	46.840	1.5	1.5	2.0	9.850	13.60	0.000	1.030
~~SURVEY WORKER~~ -> NOT IN EFFECT		ALL		37.000	37.750	1.5	1.5	2.0	12.97	9.930	0.000	0.500
TERRAZZO FINISHER		BLD		37.040	0.000	1.5	1.5	2.0	10.55	10.32	0.000	0.620

TERRAZZO MASON	BLD	40.880	43.880	1.5	1.5	2.0	10.55	11.63	0.000	0.820
TILE MASON	BLD	42.840	46.840	1.5	1.5	2.0	10.55	10.42	0.000	0.920
TRUCK DRIVER	ALL 1	35.650	36.200	1.5	1.5	2.0	7.250	6.319	0.000	0.250
TRUCK DRIVER	ALL 2	35.800	36.200	1.5	1.5	2.0	7.250	6.319	0.000	0.250
TRUCK DRIVER	ALL 3	36.000	36.200	1.5	1.5	2.0	7.250	6.319	0.000	0.250
TRUCK DRIVER	ALL 4	36.200	36.200	1.5	1.5	2.0	7.250	6.319	0.000	0.250
TUCKPOINTER	BLD	42.800	43.800	1.5	1.5	2.0	8.180	12.66	0.000	0.650

Legend: RG (Region)
TYP (Trade Type - All,Highway,Building,Floating,Oil & Chip,Rivers)
C (Class)
Base (Base Wage Rate)
FRMAN (Foreman Rate)
M-F>8 (OT required for any hour greater than 8 worked each day, Mon through Fri.
OSA (Overtime (OT) is required for every hour worked on Saturday)
OSH (Overtime is required for every hour worked on Sunday and Holidays)
H/W (Health & Welfare Insurance)
Pensn (Pension)
Vac (Vacation)
Trng (Training)

Explanations

KENDALL COUNTY

The following list is considered as those days for which holiday rates of wages for work performed apply: New Years Day, Memorial Day, Fourth of July, Labor Day, Thanksgiving Day, Christmas Day and Veterans Day in some classifications/counties. Generally, any of these holidays which fall on a Sunday is celebrated on the following Monday. This then makes work performed on that Monday payable at the appropriate overtime rate for holiday pay. Common practice in a given local may alter certain days of celebration. If in doubt, please check with IDOL.

EXPLANATION OF CLASSES

ASBESTOS - GENERAL - removal of asbestos material/mold and hazardous materials from any place in a building, including mechanical systems where those mechanical systems are to be removed. This includes the removal of asbestos materials/mold and hazardous materials from ductwork or pipes in a building when the building is to be demolished at the time or at some close future date.

ASBESTOS - MECHANICAL - removal of asbestos material from mechanical systems, such as pipes, ducts, and boilers, where the mechanical systems are to remain.
CERAMIC TILE FINISHER

The grouting, cleaning, and polishing of all classes of tile, whether for interior or exterior purposes, all burned, glazed or unglazed products; all composition materials, granite tiles, warning detectable tiles, cement tiles, epoxy composite materials, pavers, glass, mosaics, fiberglass, and all substitute materials, for tile made in tile-like units; all mixtures in tile like form of cement, metals, and other materials that are for and intended for use as a finished floor surface, stair treads, promenade roofs, walks, walls, ceilings, swimming pools, and all other places where tile is to form a finished interior or exterior. The mixing of all setting mortars including but not limited to thin-set mortars, epoxies, wall mud, and any other sand and cement mixtures or adhesives when used in the preparation, installation, repair, or maintenance of tile and/or similar materials. The handling and unloading of all sand, cement, lime, tile, fixtures, equipment, adhesives, or any other materials to be used in the preparation, installation, repair, or maintenance of tile and/or similar materials. Ceramic Tile Finishers shall fill all joints and voids regardless of method on all tile work, particularly and especially after installation of said tile work. Application of any and all protective coverings to all types of tile installations

including, but not be limited to, all soap compounds, paper products, tapes, and all polyethylene coverings, plywood, masonite, cardboard, and any new type of products that may be used to protect tile installations, Blastrac equipment, and all floor scarifying equipment used in preparing floors to receive tile. The clean up and removal of all waste and materials. All demolition of existing tile floors and walls to be re-tiled.

COMMUNICATIONS TECHNICIAN

Construction, installation, maintenance and removal of telecommunication facilities (voice, sound, data and video), telephone, security, and data inside wire, interconnect, terminal equipment, central offices, PABX and equipment, micro waves, V-SAT, bypass, CATV, WAN (wide area network), LAN (local area networks), and ISDN (integrated system digital network), pulling of wire in raceways, but not the installation of raceways.

MARBLE FINISHER

Loading and unloading trucks, distribution of all materials (all stone, sand, etc.), stocking of floors with material, performing all rigging for heavy work, the handling of all material that may be needed for the installation of such materials, building of scaffolding, polishing if needed, patching, waxing of material if damaged, pointing up, caulking, grouting and cleaning of marble, holding water on diamond or Carborundum blade or saw for setters cutting, use of tub saw or any other saw needed for preparation of material, drilling of holes for wires that anchor material set by setters, mixing up of molding plaster for installation of material, mixing up thin set for the installation of material, mixing up of sand to cement for the installation of material and such other work as may be required in helping a Marble Setter in the handling of all material in the erection or installation of interior marble, slate, travertine, art marble, serpentine, alberene stone, blue stone, granite and other stones (meaning as to stone any foreign or domestic materials as are specified and used in building interiors and exteriors and customarily known as stone in the trade), carrara, sanionyx, vitrolite and similar opaque glass and the laying of all marble tile, terrazzo tile, slate tile and precast tile, steps, risers treads, base, or any other materials that may be used as substitutes for any of the aforementioned materials and which are used on interior and exterior which are installed in a similar manner.

MATERIAL TESTER I: Hand coring and drilling for testing of materials; field inspection of uncured concrete and asphalt.

MATERIAL TESTER II: Field inspection of welds, structural steel, fireproofing, masonry, soil, facade, reinforcing steel, formwork, cured concrete, and concrete and asphalt batch plants; adjusting proportions of bituminous mixtures.

OPERATING ENGINEER - BUILDING

Class 1. Asphalt Plant; Asphalt Spreader; Autograde; Backhoes with Caisson Attachment; Batch Plant; Benoto (requires Two Engineers); Boiler and Throttle Valve; Caisson Rigs; Central Redi-Mix Plant; Combination Back Hoe Front End-loader Machine; Compressor and Throttle Valve; Concrete Breaker (Truck Mounted); Concrete Conveyor; Concrete Conveyor (Truck Mounted); Concrete Paver Over 27E cu. ft; Concrete Paver 27E cu. ft. and Under: Concrete Placer; Concrete Placing Boom; Concrete Pump (Truck Mounted); Concrete Tower; Cranes, All; Cranes, Hammerhead; Cranes, (GCI and similar Type); Creter Crane; Spider Crane; Crusher, Stone, etc.; Derricks, All; Derricks, Traveling; Formless Curb and Gutter Machine; Grader, Elevating; Grouting Machines; Heavy Duty Self-Propelled Transporter or Prime Mover; Highlift Shovels or Front Endloader 2-1/4 yd. and over; Hoists,

Elevators, outside type rack and pinion and similar machines; Hoists, One, Two and Three Drum; Hoists, Two Tugger One Floor; Hydraulic Backhoes; Hydraulic Boom Trucks; Hydro Vac (and similar equipment); Locomotives, All; Motor Patrol; Lubrication Technician; Manipulators; Pile Drivers and Skid Rig; Post Hole Digger; Pre-Stress Machine; Pump Cretes Dual Ram; Pump Cretes: Squeeze Cretes-Screw Type Pumps; Gypsum Bulker and Pump; Raised and Blind Hole Drill; Roto Mill Grinder; Scoops - Tractor Drawn; Slip-Form Paver; Straddle Buggies; Operation of Tie Back Machine; Tournapull; Tractor with Boom and Side Boom; Trenching Machines.

Class 2. Boilers; Broom, All Power Propelled; Bulldozers; Concrete Mixer (Two Bag and Over); Conveyor, Portable; Forklift Trucks; Highlift Shovels or Front Endloaders under 2-1/4 yd.; Hoists, Automatic; Hoists, Inside Elevators; Hoists, Sewer Dragging Machine; Hoists, Tugger Single Drum; Laser Screed; Rock Drill (Self-Propelled); Rock Drill (Truck Mounted); Rollers, All; Steam Generators; Tractors, All; Tractor Drawn Vibratory Roller; Winch Trucks with "A" Frame.

Class 3. Air Compressor; Combination Small Equipment Operator; Generators; Heaters, Mechanical; Hoists, Inside Elevators (remodeling or renovation work); Hydraulic Power Units (Pile Driving, Extracting, and Drilling); Pumps, over 3" (1 to 3 not to exceed a total of 300 ft.); Low Boys; Pumps, Well Points; Welding Machines (2 through 5); Winches, 4 Small Electric Drill Winches.

Class 4. Bobcats and/or other Skid Steer Loaders; Oilers; and Brick Forklift.

Class 5. Assistant Craft Foreman.

Class 6. Gradall.

Class 7. Mechanics; Welder.

OPERATING ENGINEERS - HIGHWAY CONSTRUCTION

Class 1. Asphalt Plant; Asphalt Heater and Planer Combination; Asphalt Heater Scarfire; Asphalt Spreader; Autograder/GOMACO or other similar type machines: ABG Paver; Backhoes with Caisson Attachment; Ballast Regulator; Belt Loader; Caisson Rigs; Car Dumper; Central Redi-Mix Plant; Combination Backhoe Front Endloader Machine, (1 cu. yd. Backhoe Bucket or over or with attachments); Concrete Breaker (Truck Mounted); Concrete Conveyor; Concrete Paver over 27E cu. ft.; Concrete Placer; Concrete Tube Float; Cranes, all attachments; Cranes, Tower Cranes of all types: Creter Crane: Spider Crane; Crusher, Stone, etc.; Derricks, All; Derrick Boats; Derricks, Traveling; Dredges; Elevators, Outside type Rack & Pinion and Similar Machines; Formless Curb and Gutter Machine; Grader, Elevating; Grader, Motor Grader, Motor Patrol, Auto Patrol, Form Grader, Pull Grader, Subgrader; Guard Rail Post Driver Truck Mounted; Hoists, One, Two and Three Drum; Heavy Duty Self-Propelled Transporter or Prime Mover; Hydraulic Backhoes; Backhoes with shear attachments up to 40' of boom reach; Lubrication Technician; Manipulators; Mucking Machine; Pile Drivers and Skid Rig; Pre-Stress Machine; Pump Cretes Dual Ram; Rock Drill - Crawler or Skid Rig; Rock Drill - Truck Mounted; Rock/Track Tamper; Roto Mill Grinder; Slip-Form Paver; Snow Melters; Soil Test Drill Rig (Truck Mounted); Straddle Buggies; Hydraulic Telescoping Form (Tunnel); Operation of Tieback Machine; Tractor Drawn Belt Loader; Tractor Drawn Belt Loader (with attached pusher - two engineers); Tractor with Boom; Tractaire with Attachments; Traffic Barrier Transfer Machine; Trenching; Truck Mounted Concrete Pump with Boom; Raised or Blind Hole Drills (Tunnel Shaft); Underground Boring and/or Mining Machines 5 ft. in diameter and over tunnel, etc; Underground Boring and/or Mining Machines under 5 ft. in diameter; Wheel Excavator; Widener (APSCO).

Class 2. Batch Plant; Bituminous Mixer; Boiler and Throttle Valve;

Bulldozers; Car Loader Trailing Conveyors; Combination Backhoe Front Endloader Machine (Less than 1 cu. yd. Backhoe Bucket or over or with attachments); Compressor and Throttle Valve; Compressor, Common Receiver (3); Concrete Breaker or Hydro Hammer; Concrete Grinding Machine; Concrete Mixer or Paver 7S Series to and including 27 cu. ft.; Concrete Spreader; Concrete Curing Machine, Burlap Machine, Belting Machine and Sealing Machine; Concrete Wheel Saw; Conveyor Muck Cars (Haglund or Similar Type); Drills, All; Finishing Machine - Concrete; Highlift Shovels or Front Endloader; Hoist - Sewer Dragging Machine; Hydraulic Boom Trucks (All Attachments); Hydro-Blaster; Hydro Excavating (excluding hose work); Laser Screed; All Locomotives, Dinky; Off-Road Hauling Units (including articulating) Non Self-Loading Ejection Dump; Pump Cretes: Squeeze Cretes - Screw Type Pumps, Gypsum Bulker and Pump; Roller, Asphalt; Rotary Snow Plows; Rototiller, Seaman, etc., self-propelled; Self-Propelled Compactor; Spreader - Chip - Stone, etc.; Scraper - Single/Twin Engine/Push and Pull; Scraper - Prime Mover in Tandem (Regardless of Size); Tractors pulling attachments, Sheeps Foot, Disc, Compactor, etc.; Tug Boats.

Class 3. Boilers; Brooms, All Power Propelled; Cement Supply Tender; Compressor, Common Receiver (2); Concrete Mixer (Two Bag and Over); Conveyor, Portable; Farm-Type Tractors Used for Mowing, Seeding, etc.; Forklift Trucks; Grouting Machine; Hoists, Automatic; Hoists, All Elevators; Hoists, Tugger Single Drum; Jeep Diggers; Low Boys; Pipe Jacking Machines; Post-Hole Digger; Power Saw, Concrete Power Driven; Pug Mills; Rollers, other than Asphalt; Seed and Straw Blower; Steam Generators; Stump Machine; Winch Trucks with "A" Frame; Work Boats; Tamper-Form-Motor Driven.

Class 4. Air Compressor; Combination - Small Equipment Operator; Directional Boring Machine; Generators; Heaters, Mechanical; Hydraulic Power Unit (Pile Driving, Extracting, or Drilling); Light Plants, All (1 through 5); Pumps, over 3" (1 to 3 not to exceed a total of 300 ft.); Pumps, Well Points; Vacuum Trucks (excluding hose work); Welding Machines (2 through 5); Winches, 4 Small Electric Drill Winches.

Class 5. SkidSteer Loader (all); Brick Forklifts; Oilers.

Class 6. Field Mechanics and Field Welders

Class 7. Dowell Machine with Air Compressor; Gradall and machines of like nature.

SURVEY WORKER - Operated survey equipment including data collectors, G.P.S. and robotic instruments, as well as conventional levels and transits.

TRUCK DRIVER - BUILDING, HEAVY AND HIGHWAY CONSTRUCTION

Class 1. Two or three Axle Trucks. A-frame Truck when used for transportation purposes; Air Compressors and Welding Machines, including those pulled by cars, pick-up trucks and tractors; Ambulances Batch Gate Lockers; Batch Hopperman; Car and Truck Washers; Carry-alls; Fork Lifts and Hoisters; Helpers; Mechanics Helpers and Greasers; Oil Distributors 2-man operation; Pavement Breakers; Pole Trailer, up to 40 feet; Power Mower Tractors; Self-propelled Chip Spreader; Skipman; Slurry Trucks, 2-man operation; Slurry Truck Conveyor Operation, 2 or 3 man; Teamsters; Unskilled Dumpman; and Truck Drivers hauling warning lights, barricades, and portable toilets on the job site.

Class 2. Four axle trucks; Dump Crets and Adgetors under 7 yards; Dumpsters, Track Trucks, Euclids, Hug Bottom Dump Turnapulls or Turnatrailers when pulling other than self-loading equipment or similar equipment under 16 cubic yards; Mixer Trucks under 7 yeards; Ready-mix Plant Hopper Operator, and Winch Trucks, 2 Axles.

Class 3. Five axle trucks; Dump Crets and Adgetors 7 yards and over;

Dumpsters, Track Trucks, Euclids, Hug Bottom Dump Turnatrailers or turnapulls when pulling other than self-loading equipment or similar equipment over 16 cubic yards; Explosives and/or Fission Material Trucks; Mixer Trucks 7 yards or over; Mobile Cranes while in transit; Oil Distributors, 1-man operation; Pole Trailer, over 40 feet; Pole and Expandable Trailers hauling material over 50 feet long; Slurry trucks, 1-man operation; Winch trucks, 3 axles or more; Mechanic--Truck Welder and Truck Painter.

Class 4. Six axle trucks; Dual-purpose vehicles, such as mounted crane trucks with hoist and accessories; Foreman; Master Mechanic; Self-loading equipment like P.B. and trucks with scoops on the front.

TERRAZZO FINISHER

The handling of sand, cement, marble chips, and all other materials that may be used by the Mosaic Terrazzo Mechanic, and the mixing, grinding, grouting, cleaning and sealing of all Marble, Mosaic, and Terrazzo work, floors, base, stairs, and wainscoting by hand or machine, and in addition, assisting and aiding Marble, Masonic, and Terrazzo Mechanics.

Other Classifications of Work:

For definitions of classifications not otherwise set out, the Department generally has on file such definitions which are available. If a task to be performed is not subject to one of the classifications of pay set out, the Department will upon being contacted state which neighboring county has such a classification and provide such rate, such rate being deemed to exist by reference in this document. If no neighboring county rate applies to the task, the Department shall undertake a special determination, such special determination being then deemed to have existed under this determination. If a project requires these, or any classification not listed, please contact IDOL at 217-782-1710 for wage rates or clarifications.

LANDSCAPING

Landscaping work falls under the existing classifications for laborer, operating engineer and truck driver. The work performed by landscape plantsman and landscape laborer is covered by the existing classification of laborer. The work performed by landscape operators (regardless of equipment used or its size) is covered by the classifications of operating engineer. The work performed by landscape truck drivers (regardless of size of truck driven) is covered by the classifications of truck driver.

MATERIAL TESTER & MATERIAL TESTER/INSPECTOR I AND II

Notwithstanding the difference in the classification title, the classification entitled "Material Tester I" involves the same job duties as the classification entitled "Material Tester/Inspector I". Likewise, the classification entitled "Material Tester II" involves the same job duties as the classification entitled "Material Tester/Inspector II".

INDEX
FOR
SUPPLEMENTAL SPECIFICATIONS
AND RECURRING SPECIAL PROVISIONS

Adopted January 1, 2015

This index contains a listing of SUPPLEMENTAL SPECIFICATIONS, frequently used RECURRING SPECIAL PROVISIONS, and LOCAL ROADS AND STREETS RECURRING SPECIAL PROVISIONS.

ERRATA Standard Specifications for Road and Bridge Construction
(Adopted 1-1-12) (Revised 1-1-15)

SUPPLEMENTAL SPECIFICATIONS

Std. Spec. Sec.		Page No.
101	Definition of Terms	1
102	Advertisement, Bidding, Award, and Contract Execution	2
105	Control of Work	3
106	Control of Materials	5
107	Legal Regulations and Responsibility to Public	6
108	Prosecution and Progress	14
109	Measurement and Payment	15
202	Earth and Rock Excavation	17
211	Topsoil and Compost	19
250	Seeding	20
253	Planting Woody Plants	21
280	Temporary Erosion and Sediment Control	23
312	Stabilized Subbase	24
406	Hot-Mix Asphalt Binder and Surface Course	25
407	Hot-Mix Asphalt Pavement (Full-Depth)	28
420	Portland Cement Concrete Pavement	32
424	Portland Cement Concrete Sidewalk	34
440	Removal of Existing Pavement and Appurtenances	35
502	Excavation for Structures	36
503	Concrete Structures	37
504	Precast Concrete Structures	40
506	Cleaning and Painting New Steel Structures	41
512	Piling	42
516	Drilled Shafts	43
521	Bearings	44
540	Box Culverts	45
588	Bridge Relief Joint System	46
589	Elastic Joint Sealer	48
602	Catch Basin, Manhole, Inlet, Drainage Structure, and Valve Vault Construction, Adjustment, and Reconstruction	49
603	Adjusting Frames and Grates of Drainage and Utility Structures	50
606	Concrete Gutter, Curb, Median, and Paved Ditch	52
610	Shoulder Inlets with Curb	53
639	Precast Prestressed Concrete Sight Screen	54
642	Shoulder Rumble Strips	55

643 Impact Attenuators 56
644 High Tension Cable Median Barrier 58
669 Removal and Disposal of Regulated Substances 60
670 Engineer's Field Office and Laboratory 64
701 Work Zone Traffic Control and Protection 65
706 Impact Attenuators, Temporary 68
707 Movable Traffic Barrier 71
708 Temporary Water Filled Barrier 73
730 Wood Sign Support 75
780 Pavement Striping 76
816 Unit Duct 81
836 Pole Foundation 82
860 Master Controller 83
1001 Cement 84
1003 Fine Aggregates 85
1004 Coarse Aggregates 87
1006 Metals 91
1011 Mineral Filler 93
1017 Packaged, Dry, Combined Materials for Mortar 94
1018 Packaged Rapid Hardening Mortar or Concrete 95
1019 Controlled Low-Strength Material (CLSM)..... 96
1020 Portland Cement Concrete 97
1024 Grout and Nonshrink Grout 136
1030 Hot-Mix Asphalt 137
1040 Drain Pipe, Tile, Drainage Mat, and Wall Drain 142
1042 Precast Concrete Products 143
1069 Pole and Tower 144
1070 Foundation and Breakaway Devices 145
1073 Controller 146
1081 Materials for Planting 147
1082 Preformed Bearing Pads 148
1083 Elastomeric Bearings 149
1088 Wireway and Conduit System 150
1095 Pavement Markings 152
1101 General Equipment 155
1102 Hot-Mix Asphalt Equipment 157
1103 Portland Cement Concrete Equipment 159
1105 Pavement Marking Equipment 160
1106 Work Zone Traffic Control Devices 161

CHECK SHEET
FOR
RECURRING SPECIAL PROVISIONS

Adopted January 1, 2015

The following RECURRING SPECIAL PROVISIONS indicated by an "X" are applicable to this contract and are included by reference:

RECURRING SPECIAL PROVISIONS

CHECK SHEET #			PAGE NO.
1	☒	Additional State Requirements for Federal-Aid Construction Contracts	163
2	☒	Subletting of Contracts (Federal-Aid Contracts)	166
3	☒	EEO	167
4	☐	Specific EEO Responsibilities Non Federal-Aid Contracts	177
5	☐	Required Provisions - State Contracts	182
6	☐	Asbestos Bearing Pad Removal	188
7	☐	Asbestos Waterproofing Membrane and Asbestos Hot-Mix Asphalt Surface Removal	189
8	☐	Temporary Stream Crossings and In-Stream Work Pads	190
9	☐	Construction Layout Stakes Except for Bridges	191
10	☐	Construction Layout Stakes	194
11	☐	Use of Geotextile Fabric for Railroad Crossing	197
12	☐	Subsealing of Concrete Pavements	199
13	☐	Hot-Mix Asphalt Surface Correction	203
14	☐	Pavement and Shoulder Resurfacing	205
15		Reserved	206
16	☐	Patching with Hot-Mix Asphalt Overlay Removal	207
17	☐	Polymer Concrete	208
18	☐	PVC Pipeliner	210
19	☐	Pipe Underdrains	211
20	☐	Guardrail and Barrier Wall Delineation	212
21	☐	Bicycle Racks	216
22		Reserved	218
23	☐	Temporary Portable Bridge Traffic Signals	219
24	☐	Work Zone Public Information Signs	221
25	☐	Nighttime Inspection of Roadway Lighting	222
26	☐	English Substitution of Metric Bolts	223
27	☐	English Substitution of Metric Reinforcement Bars	224
28	☐	Calcium Chloride Accelerator for Portland Cement Concrete	225
29		Reserved	226
30	☐	Quality Control of Concrete Mixtures at the Plant	227
31	☐	Quality Control/Quality Assurance of Concrete Mixtures	235
32	☐	Digital Terrain Modeling for Earthwork Calculations	251
33	☐	Pavement Marking Removal	253
34	☐	Preventive Maintenance – Bituminous Surface Treatment	254
35	☐	Preventive Maintenance – Cape Seal	260
36	☐	Preventive Maintenance – Micro-Surfacing	275
37	☐	Preventive Maintenance – Slurry Seal	286
38	☐	Temporary Raised Pavement Markers	296
39	☐	Restoring Bridge Approach Pavements Using High-Density Foam	297

CHECK SHEET
FOR
LOCAL ROADS AND STREETS RECURRING SPECIAL PROVISIONS

Adopted January 1, 2015

The following LOCAL ROADS AND STREETS RECURRING SPECIAL PROVISIONS indicated by an "X" are applicable to this contract and are included by reference:

LOCAL ROADS AND STREETS RECURRING SPECIAL PROVISIONS

CHECK SHEET #			PAGE NO.
LRS 1		Reserved	301
LRS 2	☐	Furnished Excavation	302
LRS 3	☒	Work Zone Traffic Control Surveillance	303
LRS 4	☒	Flaggers in Work Zones	304
LRS 5	☒	Contract Claims	305
LRS 6	☐	Bidding Requirements and Conditions for Contract Proposals	306
LRS 7	☐	Bidding Requirements and Conditions for Material Proposals	312
LRS 8		Reserved	318
LRS 9	☐	Bituminous Surface Treatments	319
LRS 10		Reserved	320
LRS 11	☐	Employment Practices	321
LRS 12	☐	Wages of Employees on Public Works	323
LRS 13	☐	Selection of Labor	325
LRS 14	☐	Paving Brick and Concrete Paver Pavements and Sidewalks	326
LRS 15	☐	Partial Payments	329
LRS 16	☐	Protests on Local Lettings	330
LRS 17	☐	Substance Abuse Prevention Program	331
LRS 18	☐	Multigrade Cold Mix Asphalt	332

BDE SPECIAL PROVISIONS
For the April 24 and June 12, 2015 Lettings

The following special provisions indicated by an "x" are applicable to this contract and will be included by the Project Development and Implementation Section of the BD&E. An * indicates a new or revised special provision for the letting.

	File Name	#		Special Provision Title	Effective	Revised
	80240	1		Above Grade Inlet Protection	July 1, 2009	Jan. 1, 2012
	80099	2		Accessible Pedestrian Signals (APS)	April 1, 2003	Jan. 1, 2014
	80274	3		Aggregate Subgrade Improvement	April 1, 2012	Jan. 1, 2013
	80192	4		Automated Flagger Assistance Device	Jan. 1, 2008	
	80173	5		Bituminous Materials Cost Adjustments	Nov. 2, 2006	Aug. 1, 2013
	80241	6		Bridge Demolition Debris	July 1, 2009	
	5026I	7		Building Removal-Case I (Non-Friable and Friable Asbestos)	Sept. 1, 1990	April 1, 2010
	5048I	8		Building Removal-Case II (Non-Friable Asbestos)	Sept. 1, 1990	April 1, 2010
	5049I	9		Building Removal-Case III (Friable Asbestos)	Sept. 1, 1990	April 1, 2010
	5053I	10		Building Removal-Case IV (No Asbestos)	Sept. 1, 1990	April 1, 2010
	80310	11		Coated Galvanized Steel Conduit	Jan. 1, 2013	Jan. 1, 2015
	80341	12		Coilable Nonmetallic Conduit	Aug. 1, 2014	Jan. 1, 2015
	80198	13		Completion Date (via calendar days)	April 1, 2008	
	80199	14		Completion Date (via calendar days) Plus Working Days	April 1, 2008	
*	80293	15		Concrete Box Culverts with Skews > 30 Degrees and Design Fills ≤ 5 Feet	April 1, 2012	April 1, 2015
	80294	16		Concrete Box Culverts with Skews ≤ 30 Degrees Regardless of Design Fill and Skews > 30 Degrees with Design Fills > 5 Feet	April 1, 2012	April 1, 2014
	80311	17		Concrete End Sections for Pipe Culverts	Jan. 1, 2013	
	80334	18		Concrete Gutter, Curb, Median, and Paved Ditch	April 1, 2014	Aug. 1, 2014
	80277	19		Concrete Mix Design – Department Provided	Jan. 1, 2012	Jan. 1, 2014
	80261	20	✔	Construction Air Quality – Diesel Retrofit	June 1, 2010	Nov. 1, 2014
	80335	21		Contract Claims	April 1, 2014	
*	80029	22		Disadvantaged Business Enterprise Participation	Sept. 1, 2000	Jan. 2, 2015
*	80358	23		Equal Employment Opportunity	April 1, 2015	
	80265	24		Friction Aggregate	Jan. 1, 2011	Nov. 1, 2014
	80229	25		Fuel Cost Adjustment	April 1, 2009	July 1, 2009
	80329	26		Glare Screen	Jan. 1, 2014	
	80304	27		Grooving for Recessed Pavement Markings	Nov. 1, 2012	Aug. 1, 2014
	80246	28		Hot-Mix Asphalt – Density Testing of Longitudinal Joints	Jan. 1, 2010	April 1, 2012
	80322	29		Hot-Mix Asphalt – Mixture Design Composition and Volumetric Requirements	Nov. 1, 2013	Nov. 1, 2014
	80323	30		Hot-Mix Asphalt – Mixture Design Verification and Production	Nov. 1, 2013	Nov. 1, 2014
*	80347	31		Hot-Mix Asphalt – Pay for Performance Using Percent Within Limits – Jobsite Sampling	Nov. 1, 2014	April 1, 2015
	80348	32		Hot-Mix Asphalt – Prime Coat	Nov. 1, 2014	
	80315	33		Insertion Lining of Culverts	Jan. 1, 2013	Nov. 1, 2013
	80351	34		Light Tower	Jan. 1, 2015	
	80336	35		Longitudinal Joint and Crack Patching	April 1, 2014	
*	80324	36		LRFD Pipe Culvert Burial Tables	Nov. 1, 2013	April 1, 2015
*	80325	37		LRFD Storm Sewer Burial Tables	Nov. 1, 2013	April 1, 2015
	80045	38		Material Transfer Device	June 15, 1999	Aug. 1, 2014
	80342	39		Mechanical Side Tie Bar Inserter	Aug. 1, 2014	Jan. 1, 2015
	80165	40		Moisture Cured Urethane Paint System	Nov. 1, 2006	Jan. 1, 2010
	80337	41		Paved Shoulder Removal	April 1, 2014	
	80349	42		Pavement Marking Blackout Tape	Nov. 1, 2014	
	80298	43		Pavement Marking Tape Type IV	April 1, 2012	

File Name	#		Special Provision Title	Effective	Revised
80254	44		Pavement Patching	Jan. 1, 2010	
80352	45		Pavement Striping - Symbols	Jan. 1, 2015	
* 80359	46		Portland Cement Concrete Bridge Deck Curing	April 1, 2015	
* 80353	47		Portland Cement Concrete Inlay or Overlay	Jan. 1, 2015	April 1, 2015
80338	48		Portland Cement Concrete Partial Depth Hot-Mix Asphalt Patching	April 1, 2014	
80343	49		Precast Concrete Handhole	Aug. 1, 2014	
80300	50		Preformed Plastic Pavement Marking Type D - Inlaid	April 1, 2012	
80328	51		Progress Payments	Nov. 2, 2013	
3426I	52		Railroad Protective Liability Insurance	Dec. 1, 1986	Jan. 1, 2006
80157	53		Railroad Protective Liability Insurance (5 and 10)	Jan. 1, 2006	
80306	54		Reclaimed Asphalt Pavement (RAP) and Reclaimed Asphalt Shingles (RAS)	Nov. 1, 2012	April 1, 2014
80350	55		Retroreflective Sheeting for Highway Signs	Nov. 1, 2014	
80327	56	✔	Reinforcement Bars	Nov. 1, 2013	
80344	57		Rigid Metal Conduit	Aug. 1, 2014	
* 80354	58		Sidewalk, Corner, or Crosswalk Closure	Jan. 1, 2015	April 1, 2015
80340	59		Speed Display Trailer	April 2, 2014	
80127	60		Steel Cost Adjustment	April 2, 2004	April 1, 2009
80317	61		Surface Testing of Hot-Mix Asphalt Overlays	Jan. 1, 2013	
80355	62		Temporary Concrete Barrier	Jan. 1, 2015	
80301	63		Tracking the Use of Pesticides	Aug. 1, 2012	
80356	64		Traffic Barrier Terminals Type 6 or 6B	Jan. 1, 2015	
20338	65		Training Special Provisions	Oct. 15, 1975	
80318	66		Traversable Pipe Grate	Jan. 1, 2013	April 1, 2014
* 80345	67		Underpass Luminaire	Aug. 1, 2014	April 1, 2015
80357	68		Urban Half Road Closure with Mountable Median	Jan. 1, 2015	
* 80346	69		Waterway Obstruction Warning Luminaire	Aug. 1, 2014	April 1, 2015
80288	70		Warm Mix Asphalt	Jan. 1, 2012	Nov. 1, 2014
80302	71		Weekly DBE Trucking Reports	June 2, 2012	
80289	72		Wet Reflective Thermoplastic Pavement Marking	Jan. 1, 2012	
80071	73		Working Days	Jan. 1, 2002	

The following special provisions are in the 2015 Supplemental Specifications and Recurring Special Provisions:

File Name	Special Provision Title	New Location	Effective	Revised
80292	Coarse Aggregate in Bridge Approach Slabs/Footings	Articles 1004.01(b) and 1004.02(f)	April 1, 2012	April 1, 2013
80303	Granular Materials	Articles 1003.04, 1003.04(c), and 1004.05(c)	Nov. 1, 2012	
80330	Pavement Marking for Bike Symbol	Article 780.14	Jan. 1, 2014	
80331	Payrolls and Payroll Records	Recurring CS #1 and #5	Jan. 1, 2014	
80332	Portland Cement Concrete – Curing of Abutments and Piers	Article 1020.13	Jan. 1, 2014	
80326	Portland Cement Concrete Equipment	Article 1103.03(a)(5)	Nov. 1, 2013	
80281	Quality Control/Quality Assurance of Concrete Mixtures	Recurring CS #31	Jan. 1, 2012	Jan. 1, 2014
80283	Removal and Disposal of Regulated Substances	Articles 669.01, 669.08, 669.09, 669.14, and 669.16	Jan. 1, 2012	Nov. 2, 2012
80319	Removal and Disposal of Surplus Materials	Article 202.03	Nov. 2, 2012	
80307	Seeding	Article 250.07	Nov. 1, 2012	
80339	Stabilized Subbase	Article 312.06	April 1, 2014	
80333	Traffic Control Setup and Removal Freeway/Expressway	Articles 701.18(l) and 701.19(a)	Jan. 1, 2014	

The following special provisions require additional information from the designer. The additional information needs to be included in a separate document attached to this check sheet. The Project Development and Implementation section will then include the information in the applicable special provision. The Special Provisions are:

- Bridge Demolition Debris
- Building Removal-Case I
- Building Removal-Case II
- Building Removal-Case III
- Building Removal-Case IV
- Completion Date
- Completion Date Plus Working Days
- DBE Participation
- Material Transfer Device
- Railroad Protective Liability Insurance
- Training Special Provisions
- Working Days

CONSTRUCTION AIR QUALITY – DIESEL RETROFIT (BDE)

Effective: June 1, 2010
Revised: January 1, 2014

The reduction of emissions of particulate matter (PM) for off-road equipment shall be accomplished by installing retrofit emission control devices. The term "equipment" refers to diesel fuel powered devices rated at 50 hp and above, to be used on the jobsite in excess of seven calendar days over the course of the construction period on the jobsite (including rental equipment).

Contractor and subcontractor diesel powered off-road equipment assigned to the contract shall be retrofitted using the phased in approach shown below. Equipment that is of a model year older than the year given for that equipment's respective horsepower range shall be retrofitted:

Effective Dates	Horsepower Range	Model Year
June 1, 2010 1/	600-749	2002
	750 and up	2006
June 1, 2011 2/	100-299	2003
	300-599	2001
	600-749	2002
	750 and up	2006
June 1, 2012 2/	50-99	2004
	100-299	2003
	300-599	2001
	600-749	2002
	750 and up	2006

1/ Effective dates apply to Contractor diesel powered off-road equipment assigned to the contract.
2/ Effective dates apply to Contractor and subcontractor diesel powered off-road equipment assigned to the contract.

The retrofit emission control devices shall achieve a minimum PM emission reduction of 50 percent and shall be:

a) Included on the U.S. Environmental Protection Agency (USEPA) *Verified Retrofit Technology List* (http://www.epa.gov/cleandiesel/verification/verif-list.htm), or verified by the California Air Resources Board (CARB) (http://www.arb.ca.gov/diesel/verdev/vt/cvt.htm); or

b) Retrofitted with a non-verified diesel retrofit emission control device if verified retrofit emission control devices are not available for equipment proposed to be used on the project, and if the Contractor has obtained a performance certification from the retrofit

device manufacturer that the emission control device provides a minimum PM emission reduction of 50 percent.

Note: Large cranes (Crawler mounted cranes) which are responsible for critical lift operations are exempt from installing retrofit emission control devices if such devices adversely affect equipment operation.

Diesel powered off-road equipment with engine ratings of 50 hp and above, which are unable to be retrofitted with verified emission control devices or if performance certifications are not available which will achieve a minimum 50 percent PM reduction, may be granted a waiver by the Department if documentation is provided showing good faith efforts were made by the Contractor to retrofit the equipment.

Construction shall not proceed until the Contractor submits a certified list of the diesel powered off-road equipment that will be used, and as necessary, retrofitted with emission control devices. The list(s) shall include (1) the equipment number, type, make, Contractor/rental company name; and (2) the emission control devices make, model, USEPA or CARB verification number, or performance certification from the retrofit device manufacturer. Equipment reported as fitted with emissions control devices shall be made available to the Engineer for visual inspection of the device installation, prior to being used on the jobsite.

The Contractor shall submit an updated list of retrofitted off-road construction equipment as retrofitted equipment changes or comes on to the jobsite. The addition or deletion of any diesel powered equipment shall be included on the updated list.

If any diesel powered off-road equipment is found to be in non-compliance with any portion of this special provision, the Engineer will issue the Contractor a diesel retrofit deficiency deduction.

Any costs associated with retrofitting any diesel powered off-road equipment with emission control devices shall be considered as included in the contract unit prices bid for the various items of work involved and no additional compensation will be allowed. The Contractor's compliance with this notice and any associated regulations shall not be grounds for a claim.

Diesel Retrofit Deficiency Deduction

When the Engineer determines that a diesel retrofit deficiency exists, a daily monetary deduction will be imposed for each calendar day or fraction thereof the deficiency continues to exist. The calendar day(s) will begin when the time period for correction is exceeded and end with the Engineer's written acceptance of the correction. The daily monetary deduction will be $1,000.00 for each deficiency identified.

The deficiency will be based on lack of diesel retrofit emissions control.

If a Contractor accumulates three diesel retrofit deficiency deductions for the same piece of equipment in a contract period, the Contractor will be shutdown until the deficiency is corrected.

Such a shutdown will not be grounds for any extension of the contract time, waiver of penalties, or be grounds for any claim.

80261

REINFORCEMENT BARS (BDE)

Effective: November 1, 2013

Revise the first and second paragraphs of Article 508.05 of the Standard Specifications to read:

"**508.05 Placing and Securing.** All reinforcement bars shall be placed and tied securely at the locations and in the configuration shown on the plans prior to the placement of concrete. Manual welding of reinforcement may only be permitted or precast concrete products as indicated in the current Bureau of Materials and Physical Research Policy Memorandum "Quality Control / Quality Assurance Program for Precast Concrete Products", and for precast prestressed concrete products as indicated in the Department's current "Manual for Fabrication of Precast Prestressed Concrete Products". Reinforcement bars shall not be placed by sticking or floating into place or immediately after placement of the concrete.

Bars shall be tied at all intersections, except where the center to center dimension is less than 1 ft (300 mm) in each direction, in which case alternate intersections shall be tied. Molded plastic clips may be used in lieu of wire to secure bar intersections, but shall not be permitted in horizontal bar mats subject to construction foot traffic or to secure longitudinal bar laps. Plastic clips shall adequately secure the reinforcement bars, and shall permit the concrete to flow through and fully encase the reinforcement. Plastic clips may be recycled plastic, and shall meet the approval of the Engineer. The number of ties as specified shall be doubled for lap splices at the stage construction line of concrete bridge decks when traffic is allowed on the first completed stage during the pouring of the second stage."

Revise the fifth paragraph of Article 508.05 of the Standard Specifications to read:

"Supports for reinforcement in bridge decks shall be metal. For all other concrete construction the supports shall be metal or plastic. Metal bar supports shall be made of cold-drawn wire, or other approved material and shall be either epoxy coated, galvanized or plastic tipped. When the reinforcement bars are epoxy coated, the metal supports shall be epoxy coated. Plastic supports may be recycled plastic. Supports shall be provided in sufficient number and spaced to provide the required clearances. Supports shall adequately support the reinforcement bars, and shall permit the concrete to flow through and fully encase the reinforcement. The legs of supports shall be spaced to allow an opening that is a minimum 1.33 times the nominal maximum aggregate size used in the concrete. Nominal maximum aggregate size is defined as the largest sieve which retains any of the aggregate sample particles. All supports shall meet the approval of the Engineer."

Revise the first sentence of the eighth paragraph of Article 508.05 of the Standard Specifications to read:

"Epoxy coated reinforcement bars shall be tied with plastic coated wire, epoxy coated wire, or molded plastic clips where allowed."

Add the following sentence to the end of the first paragraph of Article 508.06(c) of the Standard Specifications:

> "In addition, the total slip of the bars within the splice sleeve of the connector after loading in tension to 30 ksi (207 MPa) and relaxing to 3 ksi (20.7 MPa) shall not exceed 0.01 in. (254 microns)."

Revise Article 1042.03(d) of the Standard Specifications to read:

"(d) Reinforcement and Accessories: The concrete cover over all reinforcement shall be within ±1/4 in. (±6 mm) of the specified cover.

Welded wire fabric shall be accurately bent and tied in place.

Miscellaneous accessories to be cast into the concrete or for forming holes and recesses shall be carefully located and rigidly held in place by bolts, clamps, or other effective means. If paper tubes are used for vertical dowel holes, or other vertical holes which require grouting, they shall be removed before transportation to the construction site."

80327

INDEX OF SPECIAL PROVISIONS

DESCRIPTION OF WORK 1

LOCATION OF WORK 1

MAINTENANCE OF ROADWAYS 1

MOBILIZATION 2

COMPLETION DATE 2

TRAFFIC CONTROL AND PROTECTION 2

PUBLIC CONVENIENCE AND SAFETY (DIST 1) 3

SPECIAL PROVISIONS

The following Special Provisions supplement the Illinois Department of Transportation's (IDOT) "Standard Specifications for Road and Bridge Construction," adopted January 1, 2012 (hereinafter referred to as the "Standard Specifications"); the "Manual on Uniform Traffic Control Devices for Streets and Highways" the "Manual of Test Procedures of Materials", in effect on the date of invitation for bids; and the "Supplemental Specifications and Recurring Special Provisions," latest edition as indicated on the Check Sheet included herein, which apply to and govern the construction of the Main Street and Tyler Street over Bartlett Creek Culvert Repairs, Section 13-00000-01-GM, Kendall County, Illinois. In case of conflict with any part or parts of the Standard Specifications, these Special Provisions shall take precedence and shall govern.

DESCRIPTION OF WORK

The work shall include, but not limited to, pavement removal, concrete structures, box culvert end section(s), erosion control and restoration, and all incidental and collateral work necessary to complete the project as described herein.

LOCATION OF WORK

The project consists of installation of a liner in the existing limestone arch culvert carrying Main Street over Bartlett Creek and repairs to the Tyler Street Culvert that shall consist of the partial removal of existing portions of the downstream end section and culvert and construction of a new box culvert end section along with proposed guardrail, pavement replacement and restoration in the Village of Oswego, Kendall County, Illinois as shown on the project location map. The total length of the improvement is 76 feet or 0.02 miles. The following is a list of streets included in the 2015 Road Program:

MAINTENANCE OF ROADWAYS

Effective: September 30, 1985 Revised: November 1, 1996

Beginning on the date that work begins on this project, the Contractor shall assume responsibility for normal maintenance of all existing roadways within the limits of the improvement. This normal maintenance shall include all repair work deemed necessary by the Engineer, but shall not include snow removal operations. Traffic control and protection for maintenance of roadways will be provided by the Contractor as required by the Engineer.

If items of work have not been provided in the contract, or otherwise specified for payment, such items, including the accompanying traffic control and protection required by the Engineer, will be paid for in accordance with Article 109.04 of the Standard Specifications.

MOBILIZATION

This Contract contains no provisions for Mobilization. Therefore, Section 671 of the Standard Specifications is deleted.

COMPLETION DATE

This contract shall be completed by **October 16, 2015**; if the Contractor fails to complete the work by the above-specified date, liquidated damages will be charged in accordance with the provisions of Article 108.09 and shall be strictly adhered to.

TRAFFIC CONTROL AND PROTECTION

Both Main Street and Tyler Street shall be closed to traffic during construction, but not at the same time and not for longer than two consecutive days without prior authorization from the Village of Oswego. The Contractor shall notify the Village of Oswego of the dates of roadway closures, limited to Main Street and Tyler Street within the project limits at least one week prior to closure of the roadways. The Contractors should take particular note of the applicable portions of Article 107.14 of the Standard Specifications. All signs, except those referring to daily lane closures, shall be post mounted in accordance with Standard 701901 for all projects that exceed four-day duration. Construction signs referring to daytime lane closures during working hours shall be removed, covered or turned away from the view of the motorists during non-working hours.

The Contractor shall furnish, erect, maintain and remove all signs, barricades, flaggers and other traffic control devices as may be necessary for the purpose of regulating, warning or guiding traffic. Placement and maintenance of all traffic control devices shall be in accordance with the applicable parts of Section 701 of the Standard Specifications, the Illinois Manual on Uniform Traffic Control Devices for Streets and Highways and the Highway Standard contained herein.

Special attention is called to Article 107.09 and Section 701 of the Standard Specifications and the following Highways Standards, Supplemental Specifications, Details, Quality Standard for Work Zone Traffic Control Devices, Recurring Special Provisions, and Special Provisions contained herein relating to traffic control. It should be noted that Type I or Type II barricades will be required adjacent to the pavement in areas where a drop off of 3'' or more occurs in accordance with Article 701.07.

Standards
BLR 17-4

Special Provisions
Maintenance of Roadways

Public Convenience and Safety (Dist 1)
Construction and Maintenance Signs
Construction and Maintenance Signs (LR 702)
Work Zone Traffic Control Surveillance (LRS#3)
Flaggers in Work Zones (LRS#4)

The Contractor shall contact the Village, at least 72 hours in advance of beginning work. Construction operations shall be conducted in a manner such that access to abutting property shall be maintained.

The Contractor shall be responsible for providing a proposed scheduling, phasing and traffic control plan. The Village will review these plans and provide the contractor with any necessary modifications in writing. The Contractor will then be responsible for incorporating these changes into the proposed scheduling, phasing and traffic control plan.

At the preconstruction meeting, the Contractor shall furnish the name and telephone number where he may be reached during non-working hours of the individual in his direct employ that is to be responsible for the installation and maintenance of the traffic control of this project. If the actual installation and maintenance are to be accomplished by a subcontractor, consent shall be requested of the Engineer at the time of the preconstruction meeting in accordance with Article 108.01 of the Standard Specifications. This shall not relieve the Contractor of the requirements to have a responsible individual in his direct employ supervise this work.

Traffic Control and Protection will be not be measured for payment and will be included under contract unit price for mobilization.

PUBLIC CONVENIENCE AND SAFETY (DIST 1)
Effective: May 1, 2012 Revised: July 15, 2012

Add the following to the end of the fourth paragraph of Article 107.09:

“If the holiday is on a Saturday or Sunday, and is legally observed on a Friday or Monday, the length of Holiday Period for Monday or Friday shall apply.”

Add the following sentence after the Holiday Period table in the fourth paragraph of Article 107.09:

“The Length of Holiday Period for Thanksgiving shall be from 5:00 AM the Wednesday prior to 11:59 PM the Sunday After”

Delete the fifth paragraph of Article 107.09 of the Standard Specifications:

“On weekends, excluding holidays, roadways with Average Daily Traffic of 25,000 or greater, all lanes shall be open to traffic from 3:00 P.M. Friday to midnight Sunday except where structure construction or major rehabilitation makes it impractical.”

State of Illinois
Department of Transportation
Bureau of Local Roads and Streets

SPECIAL PROVISION
FOR
COOPERATION WITH UTILITIES

Effective: January 1, 1999
Revised: January 1, 2007

All references to Sections or Articles in this specification shall be construed to mean specific Section or Article of the Standard Specifications for Road and Bridge Construction, adopted by the Department of Transportation.

Replace Article 105.07 of the Standard Specifications with the following:

"**105.07 Cooperation with Utilities.** The adjustment of utilities consists of the relocation, removal, replacement, rearrangements, reconstruction, improvement, disconnection, connection, shifting, new installation or altering of an existing utility facility in any manner.

When the plans or special provisions include information pertaining to the location of underground utility facilities, such information represents only the opinion of the Department as to the location of such utilities and is only included for the convenience of the bidder. The Department assumes no responsibility in respect to the sufficiency or the accuracy of the information shown on the plans relative to the location of the underground utility facilities.

Utilities which are to be adjusted shall be adjusted by the utility owner or the owner's representative or by the Contractor as a contract item. Generally, arrangements for adjusting existing utilities will be made by the Department prior to project construction; however, utilities will not necessarily be adjusted in advance of project construction and, in some cases, utilities will not be removed from the proposed construction limits. When utility adjustments must be performed in conjunction with construction, the utility adjustment work will be shown on the plans and/or covered by Special Provisions.

When the Contractor discovers a utility has not been adjusted by the owner or the owner's representative as indicated in the contract documents, or the utility is not shown on the plans or described in the Special Provisions as to be adjusted in conjunction with construction, the Contractor shall not interfere with said utility, and shall take proper precautions to prevent damage or interruption of the utility and shall promptly notify the Engineer of the nature and location of said utility.

All necessary adjustments, as determined by the Engineer, of utilities not shown on the plans or not identified by markers, will be made at no cost to the Contractor except traffic structures, light poles, etc., that are normally located within the proposed construction limits as hereinafter defined will not be adjusted unless required by the proposed improvement.

(a) Limits of Proposed Construction for Utilities Paralleling the Roadway. For the purpose of this Article, limits of proposed construction for utilities extending in the same longitudinal direction as the roadway, shall be defined as follows:

(1) The horizontal limits shall be a vertical plane, outside of, parallel to, and 600 mm (2 ft) distant at right angles from the plan or revised slope limits.

In cases where the limits of excavation for structures are not shown on the plans, the horizontal limits shall be a vertical plane 1.2 m (4 ft) outside the edges of structure footings or the structure where no footings are required.

(2) The upper vertical limits shall be the regulations governing the roadbed clearance for the specific utility involved.

(3) The lower vertical limits shall be the top of the utility at the depth below the proposed grade as prescribed by the governing agency or the limits of excavation, whichever is less.

(b) Limits of Proposed Construction for Utilities Crossing the Roadway. For the purpose of this Article, limits of proposed construction for utilities crossing the roadway in a generally transverse direction shall be defined as follows:

(1) Utilities crossing excavations for structures that are normally made by trenching such as sewers, underdrains, etc. and all minor structures such as manholes, inlets, foundations for signs, foundations for traffic signals, etc., the limits shall be the space to be occupied by the proposed permanent construction unless otherwise required by the regulations governing the specific utility involved.

(2) For utilities crossing the proposed site of major structures such as bridges, sign trusses, etc., the limits shall be as defined above for utilities extending in the same general direction as the roadway.

The Contractor may make arrangements for adjustment of utilities outside of the limits of proposed construction provided the Contractor furnishes the Department with a signed agreement with the utility owner covering the adjustments to be made. The cost of any adjustments made outside the limits of proposed construction shall be the responsibility of the Contractor unless otherwise provided.

The Contractor shall request all utility owners to field locate their facilities according to Article 107.31. The Engineer may make the request for location from the utility after receipt of notice from the Contractor. On request, the Engineer will make an inspection to verify that the utility company has field located its facilities, but will not assume responsibility for the accuracy of such work. The Contractor shall be responsible for maintaining the excavations or markers provided by the utility owners. This field location procedure may be waived if the utility owner has stated in writing to the Department it is satisfied the construction plans are sufficiently accurate. If the utility owner does not submit such statement to the Department, and they do not field locate their facilities in both horizontal and vertical alignment, the Engineer will authorize the Contractor in writing to proceed to locate the facilities in the most economical and reasonable manner, subject to the approval of the Engineer, and be paid according to Article 109.04.

The Contractor shall coordinate with any planned utility adjustment or new installation and the Contractor shall take all precautions to prevent disturbance or damage to utility facilities. Any failure on the part of the utility owner, or their representative, to proceed with any planned utility adjustment or new installation shall be reported promptly by the Contractor to the Engineer orally and in writing.

The Contractor shall take all necessary precautions for the protection of the utility facilities. The Contractor shall be responsible for any damage or destruction of utility facilities resulting from neglect, misconduct, or omission in the Contractor's manner or method of execution or nonexecution of the work, or caused by defective work or the use of unsatisfactory materials. Whenever any damage or destruction of a utility facility occurs as a result of work performed by the Contractor, the utility company will be immediately notified. The utility company will make arrangements to restore such facility to a condition equal to that existing before any such damage or destruction was done.

It is understood and agreed that the Contractor has considered in the bid all of the permanent and temporary utilities in their present and/or adjusted positions.

No additional compensation will be allowed for any delays, inconvenience, or damage sustained by the Contractor due to any interference from the said utility facilities or the operation of relocating the said utility facilities.

State of Illinois
Department of Transportation
Bureau of Local Roads and Streets

SPECIAL PROVISION
FOR
INSURANCE

Effective: February 1, 2007
Revised: August 1, 2007

All references to Sections or Articles in this specification shall be construed to mean specific Section or Article of the Standard Specifications for Road and Bridge Construction, adopted by the Department of Transportation.

The Contractor shall name the following entities as additional insured under the Contractor's general liability insurance policy in accordance with Article 107.27:

Village of Oswego

HR Green, Inc.

The entities listed above and their officers, employees, and agents shall be indemnified and held harmless in accordance with Article 107.26.

State of Illinois
DEPARTMENT OF TRANSPORTATION
Bureau of Local Roads & Streets

SPECIAL PROVISION
FOR
WAGES OF EMPLOYEES ON PUBLIC WORKS

Effective: January 1, 1999
Revised: January 1, 2014

1. Prevailing Wages. All wages paid by the Contractor and each subcontractor shall be in compliance with The Prevailing Wage Act (820 ILCS 130), as amended, except where a prevailing wage violates a federal law, order, or ruling, the rate conforming to the federal law, order, or ruling shall govern. The Illinois Department of Labor publishes the prevailing wage rates on its website at www.state.il.us/agency/idol/rates/rates.htm. If the Illinois Department of Labor revises the prevailing wage rates, the revised prevailing wage rates on the Illinois Department of Labor's website shall apply to this contract and the Contractor will not be allowed additional compensation on account of said revisions. The Contractor shall review the wage rates applicable to the work of the contract at regular intervals in order to ensure the timely payment of current wage rates. The Contractor agrees that no additional notice is required. The Contractor shall be responsible to notify each subcontractor of the wage rates set forth in this contract and any revisions thereto.

2. Payroll Records. The Contractor and each subcontractor shall make and keep, for a period of not less than five years from the date of the last payment on a contract or subcontract, records of all laborers, mechanics, and other workers employed by them on the project; the records shall include information required by 820 ILCS 130/5 for each worker. Upon seven business days' notice, the Contractor and each subcontractor shall make available for inspection and copying at a location within this State during reasonable hours, the payroll records to the public body in charge of the project, its officers and agents, the Director of Labor and his deputies and agents, and to federal, State, or local law enforcement agencies and prosecutors.

3. Submission of Payroll Records. The Contractor and each subcontractor shall, no later than the 15th day of each calendar month, file a certified payroll for the immediately preceding month with the public body in charge of the project, except that the full social security number and home address shall not be included on weekly transmittals. Instead the payrolls shall include an identification number for each employee (e.g., the last four digits of the employee's social security number). The certified payroll shall consist of a complete copy of the payroll records except starting and ending times of work each day may be omitted

   The certified payroll shall be accompanied by a statement signed by the Contractor or subcontractor or an officer, employee, or agent of the contractor or subcontractor which avers that: (i) he or she has examined the certified payroll records required to be submitted by the Act and such records are true and accurate; (ii) the hourly rate paid to each worker is not less than the general prevailing rate of hourly wages required; and (iii) the Contractor or subcontractor is aware that filing a certified payroll that he or she knows to be false is a Class A misdemeanor.

4. Employees Interviews. The Contractor and each subcontractor shall permit his/her employees to be interviewed on the job, during working hours, by compliance investigators of the Department or the Department of Labor.

State of Illinois
Department of Transportation
Bureau of Local Roads and Streets

SPECIAL PROVISION
FOR
CONSTRUCTION AND MAINTENANCE SIGNS

Effective: January 1, 2004
Revised: June 1, 2007

All references to Sections or Articles in this specification shall be construed to mean a specific Section or Article of the Standard Specifications for Road and Bridge Construction, adopted by the Department of Transportation.

701.14. Signs. Add the following paragraph to Article 701.14:

All warning signs shall have minimum dimensions of 1200 mm x 1200 mm (48" x 48") and have a black legend on a fluorescent orange reflectorized background, meeting, as a minimum, Type AP reflectivity requirements of Table 1091-2 in Article 1091.02.

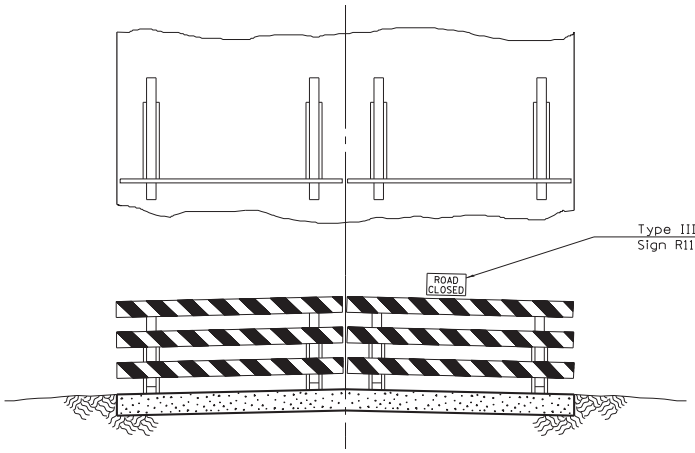

Resident traffic and day labor force's equipment to use road shoulder for passing barricade.

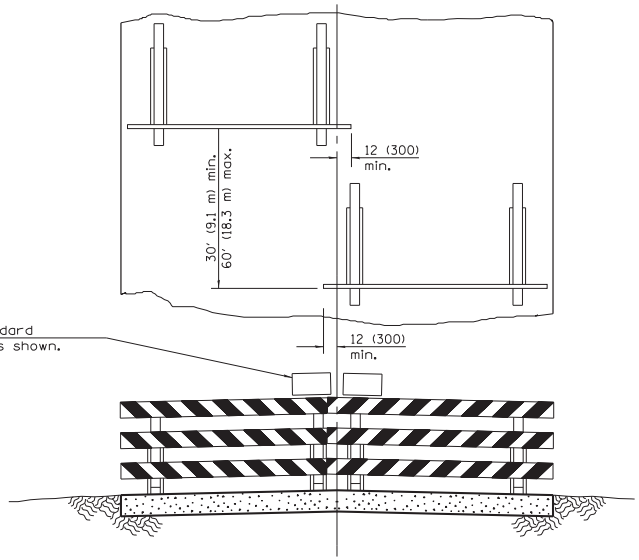

Type III Barricades with Standard Sign R11-2 or R11-4 mounted as shown.

Use when shoulders are too narrow for passage of traffic.

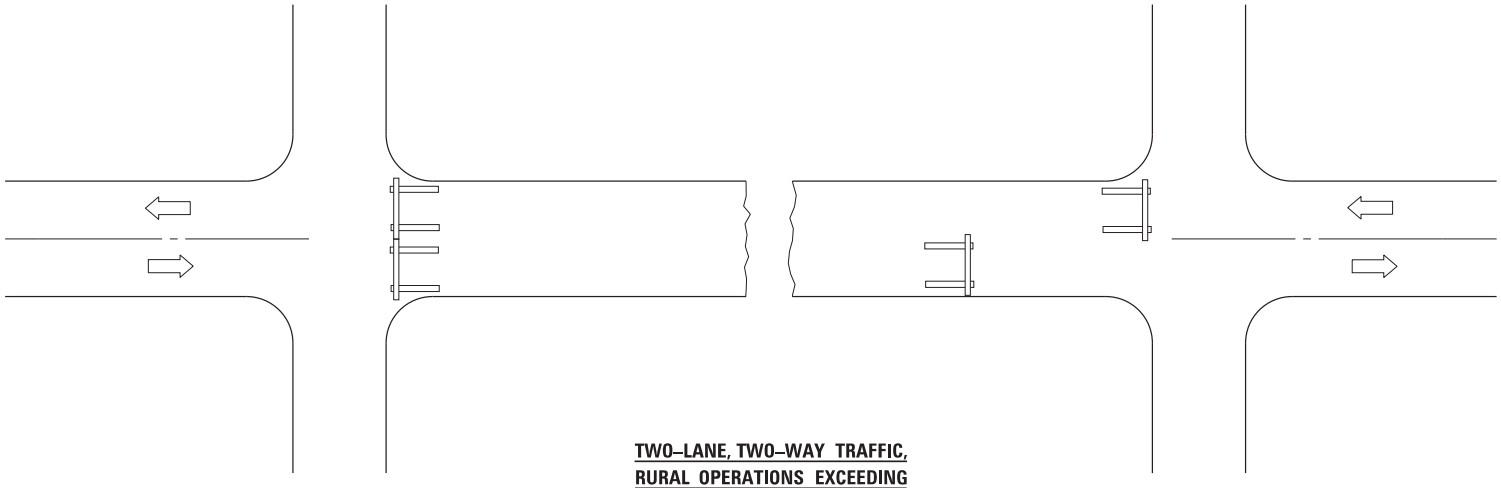

TWO–LANE, TWO–WAY TRAFFIC, RURAL OPERATIONS EXCEEDING ONE DAYLIGHT PERIOD

GENERAL NOTES

Type III barricades to be width of pavement only.

Reflectorized striping shall appear on both sides of barricades. Barricades shall be positioned so that stripes slope downward toward the side on which traffic is to pass.

Although not shown, advance warning signs with minimum dimensions of 36x36 (900x900) and black legends on orange reflectorized backgrounds shall be utilized where needed.

This case is for use on rural local roads where the local authority considers this protection to be appropriate for the specific job conditions.

All dimensions are in inches (millimeters) unless otherwise shown.

Illinois Department of Transportation

APPROVED January 1, 2009
ENGINEER OF LOCAL ROADS AND STREETS

APPROVED January 1, 2009
ENGINEER OF DESIGN AND ENVIRONMENT

ISSUED 1-1-97

DATE	REVISIONS
1-1-09	Switched units to
	English (metric).
1-1-98	Rev. "R11-1" to "R11-4".
	Rev. 4th General Note.

TRAFFIC CONTROL DEVICES – DAY LABOR CONSTRUCTION

STANDARD B.L.R. 17–4

F.A. RTE.	SECTION	COUNTY	TOTAL SHEETS	SHEET NO.
		KENDALL	6	1
FED. ROAD DIST. NO 1	ILLINOIS	CONTRACT NO. 63888		

INDEX OF SHEETS

1. COVER SHEET
2. GENERAL NOTES
3. GP&E MAIN STREET
4. GP&E TYLER STREET
5. CULVERT DETAILS
6. CULVERT DETAILS

PLANS FOR PROPOSED CULVERT REPAIR ALONG BARTLETT CREEK

VILLAGE OF OSWEGO
KENDALL COUNTY

J.U.L.I.E.
JOINT
UTILITY
LOCATION
INFORMATION FOR
EXCAVATION
CALL 811

811
Know what's **below.**
Call before you dig.

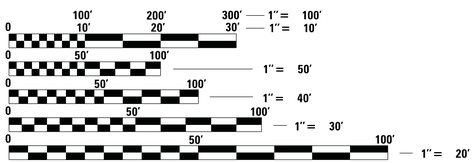

FULL SIZE PLANS HAVE BEEN PREPARED USING STANDARD ENGINEERING SCALES. REDUCED SIZED PLANS WILL NOT CONFORM TO STANDARD SCALES. IN MAKING MEASUREMENTS ON REDUCED PLANS, THE ABOVE SCALES MAY BE USED.

PROJECT LOCATED IN THE VILLAGE OF OSWEGO

PROJECT ENGINEER: ROBERT G. DAVIES
PROJECT MANAGER: D. VAN CAMP

PROJECT LOCATION MAP
OSWEGO TOWNSHIP
N.T.S.

R 8 E

T 37 N

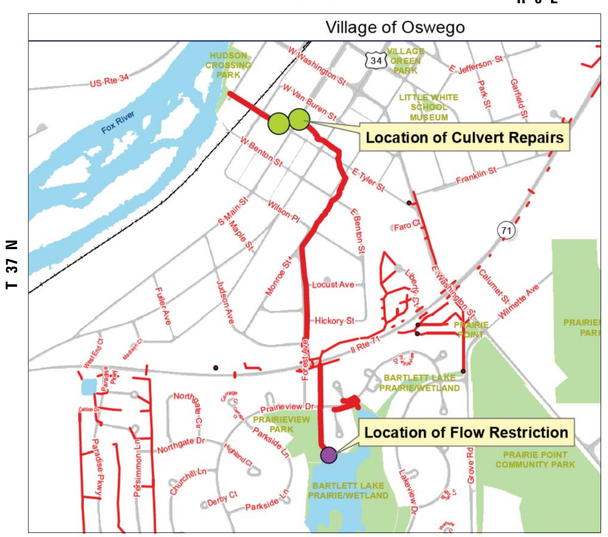

STATE OF ILLINOIS
ROBERT G. DAVIES
081-004666
McHENRY, ILLINOIS
LICENSED STRUCTURAL ENGINEER
3/25/2016
EXPIRES: 11/30/2016

HRGreen
420 NORTH FRONT STREET, SUITE 100 | McHENRY, ILLINOIS 60050
Phone: 815.385.1778 | Toll Free: 800.728.7805 | Fax: 815.385.1781 | HRGreen.com
ILLINOIS PROFESSIONAL DESIGN FIRM #184-001322

GENERAL NOTES

Utility locations and elevations shown are based upon information available at the time of design. Contractor shall retain sole responsibility for locating all utilities at the time of Construction. Any utility that is damaged during construction shall be repaired or replaced to the satisfaction of the engineer and the owner at the Contractor's expense. At least 48 hours prior to any excavating, the Contractor shall contact "JULIE" for field locations of buried utilities.

Contractor shall furnish and maintain site signage and barriers for closing of roads and/or sidewalks and traffic maintenance for the duration of construction. This work shall be incidental to the project costs.

Contractor shall provide access to existing entrances and driveways abutting and adjacent to construction site for the duration of construction.

BOX CULVERT END SECTIONS, CULVERT NO. 1 shall be paid for as noted in Article 540.08, and The Contract Unit Price shall include cast in place wingwalls, headwalls, aprons, slabs, extensions, reinforcement, excavation, backfill, and formed joint filler. In addition, erosion control, restoration, and rock excavation will not be paid for separately, but shall be included in the unit price for BOX CULVERT END SECTIONS, CULVERT NO. 1.

Reinforcement bars designated (E) shall be epoxy coated.

Contractor shall maintain streamflow in accordance with the Standard Specifications Article 502. Contractor shall not allow sediment, construction material, or debris to enter the stream.

Removal of existing wooden guardrail will not be paid for separately but included in the unit price for TRAFFIC BARRIER TERMINAL, TYPE 1 (SPECIAL) TANGENT.

The existing limestone arch culvert carrying Main Street over Bartlett Creek shall be cleaned for the entire length of the existing culvert as noted in Article 543.03 prior to installing the lining. Repair and reconnection of the storm inlet attached to the structure will not be paid for separately, but shall be included in the unit price for INSERTION CULVERT LINER, which shall include all excavation, backfill, erosion control, storm sewer pipe replacement and restoration required to complete the storm sewer inlet connection between the existing storm sewer inlet and the proposed culvert liner. The design inverts and assumed liner wall thickness should require no more than 2 to 3 inches of existing streambed removal. The existing streambed is naturally armored with stone that should be lose and easy to remove for shallow depths. If the Contractor encounters sound rock that makes shallow excavation difficult and interferes with establishing the proposed inverts, contact the Engineer prior to installing the liner.

All disturbed areas shall be restored using seeding (Class 1A or 2A), fertilizer and erosion control measures as required by the standard specification.

Perimeter Erosion Barrier, Erosion Control Blanket, and all materials required for restoration of disturbed areas (including seeding and fertilizer) shall not be paid for separately and shall be incidental to the project costs.

GUARDRAIL NOTES

The following IDOT Standard Sheets apply with exceptions as noted herein:

- Standard 630001-10
- Standard 630106-01
- Standard 630301-06
- Standard 635006-03
- Standard BLR 23-4

Exceptions:

- Use a 6" wood blockout instead of 12"
- Post shall be steel and long enough to provide min. embedment at each location (lengths likely to vary due to exist. grades.)
- No shoulder widening or improvements are required as part of this project
- Face of prop. guardrail shall have a minimum offset from edge of pavement not less than 2'-0"

STREAM DIVERSION NOTES

Stream Diversion, as needed for completion of the culvert repairs, are the Contractor's responsibility to design and install.

All temporary stream diversions shall conform to requirements in Article 107.23 of the Standard Specifications and NRCS Best Management Practices.

All work, materials and labor required for completing Stream Diversions are to be included in contract unit price for Mobilization and will not be measured separately for payment.

At the Contractor's option, a flow reduction may be accomplished by installation of temporary flow reduction measures at the weir outlet of Bartlett Lake. Bartlett Lake is a man-made pond located upstream of the culvert repair locations- (see the location map on cover).

The flow reduction measures shall result in no more than a 9" increase to the normal water levels in Bartlett Lake and / or immediately upstream of the culverts being repaired. Flow reduction measures shall be removed at the end of each work week (Friday afternoon) and prior to anticipated rainfall of more than 1/2".

The Contractor shall submit proposed designs for the temporary flow reduction and stream diversions to the Village of Oswego and the Oswegoland Park District for approval prior to the installation of either.

TOTAL BILL OF MATERIALS

ITEM	UNIT	TOTAL
CLASS D PATCHES, TYPE III, 6 INCH	SQ YD	22.2
TERMINAL MARKER - DIRECT APPLIED	EACH	4
CONCRETE REMOVAL	CU YD	3.5
BOX CULVERT END SECTIONS, CULVERT NO. 1	EACH	1
INSERTION CULVERT LINER 60"	FOOT	54
LONG-SPAN GUARDRAIL OVER CULVERT, 12 FT 6 IN SPAN	FOOT	25
TRAFFIC BARRIER TERMINAL, TYPE 1 (SPECIAL) TANGENT	EACH	1
MOBILIZATION	L SUM	1
TRAFFIC BARRIER TERMINAL, TYPE 1	EACH	3

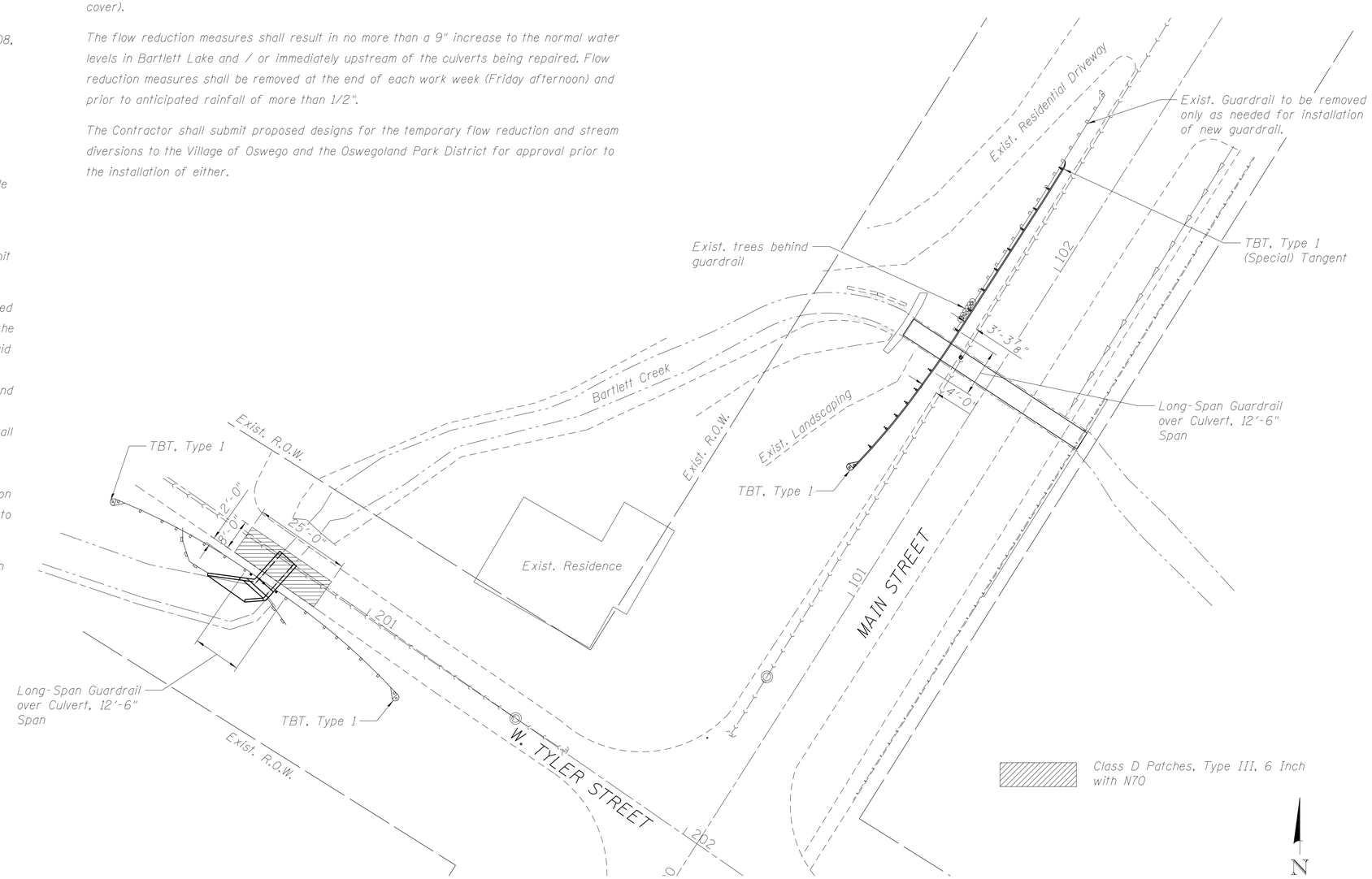

PLAN

COMPANY NAME: Robert G.Davies
PROJECT CONTACT: Village of Oswego
CLIENT: 3/24/2015 2:06:46 PM
DATE PLOTTED: 8614032B_Gen_001.dgn
FILE NAME: pdf.pit
PLOT DRIVER: Struct 11x17.tbl
PEN TABLE:

HRGreen
HRGreen.com
Illinois Professional Design Firm # 184-001322

USER NAME = sconnor	DESIGNED - SEC	REVISED -	
	CHECKED - RGD	REVISED -	
PLOT SCALE =	DRAWN - WJH	REVISED -	
PLOT DATE = 3/24/2015	CHECKED - 3/24/15	REVISED -	

VILLAGE OF OSWEGO

GENERAL NOTES
TYLER AND MAIN STREET CULVERTS

SHEET NO. OF SHEETS

F.A.U. RTE.	SECTION	COUNTY	TOTAL SHEETS	SHEET NO.
			6	2
		CONTRACT NO. Kendall		
		ILLINOIS		

Benchmark:
GPS Control:
N: 1826779.2500
E: 978669.2410
Elev. 631.295

Existing:
The existing structure consists of a dry stacked limestone arch (inverted "U" shape), 56 feet long. The arch varies from 6'-10" high by 6'-0" wide (upstream end) to 7'-5" high by 5'-10" wide (downstream end). The existing structure is to be lined with a 60" diameter pipe and the space between them shall be filled with cement grout. Roadway will be closed during construction.

BILL OF MATERIALS

ITEM	UNIT	TOTAL
Insertion Culvert Liner 60"	Foot	54

DESIGN SPECIFICATIONS

2012 AASHTO LRFD Bridge Design Specifications, 6th Edition with 2015 Interims

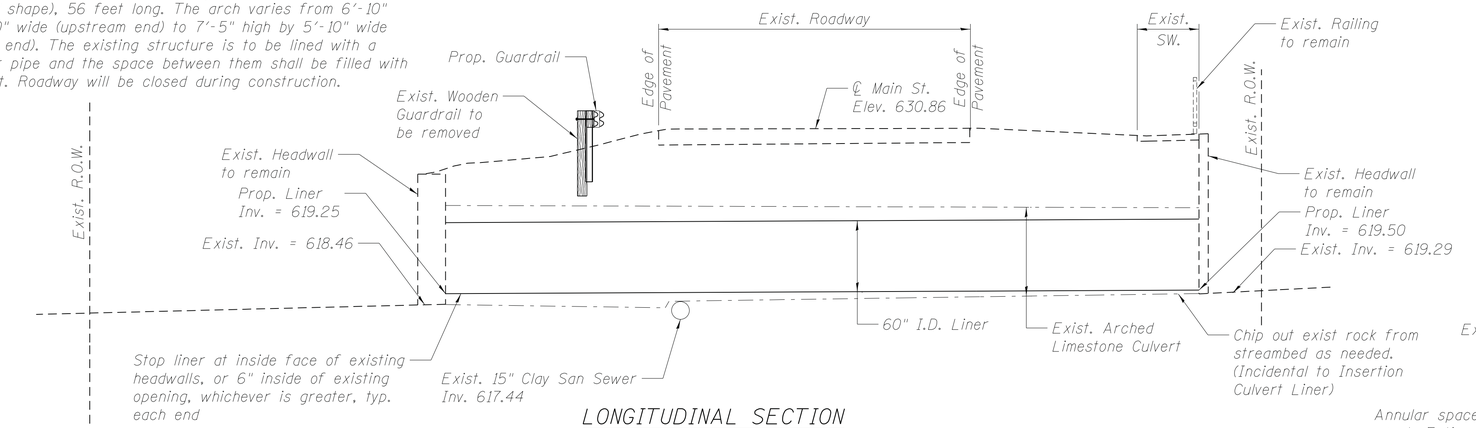

LONGITUDINAL SECTION

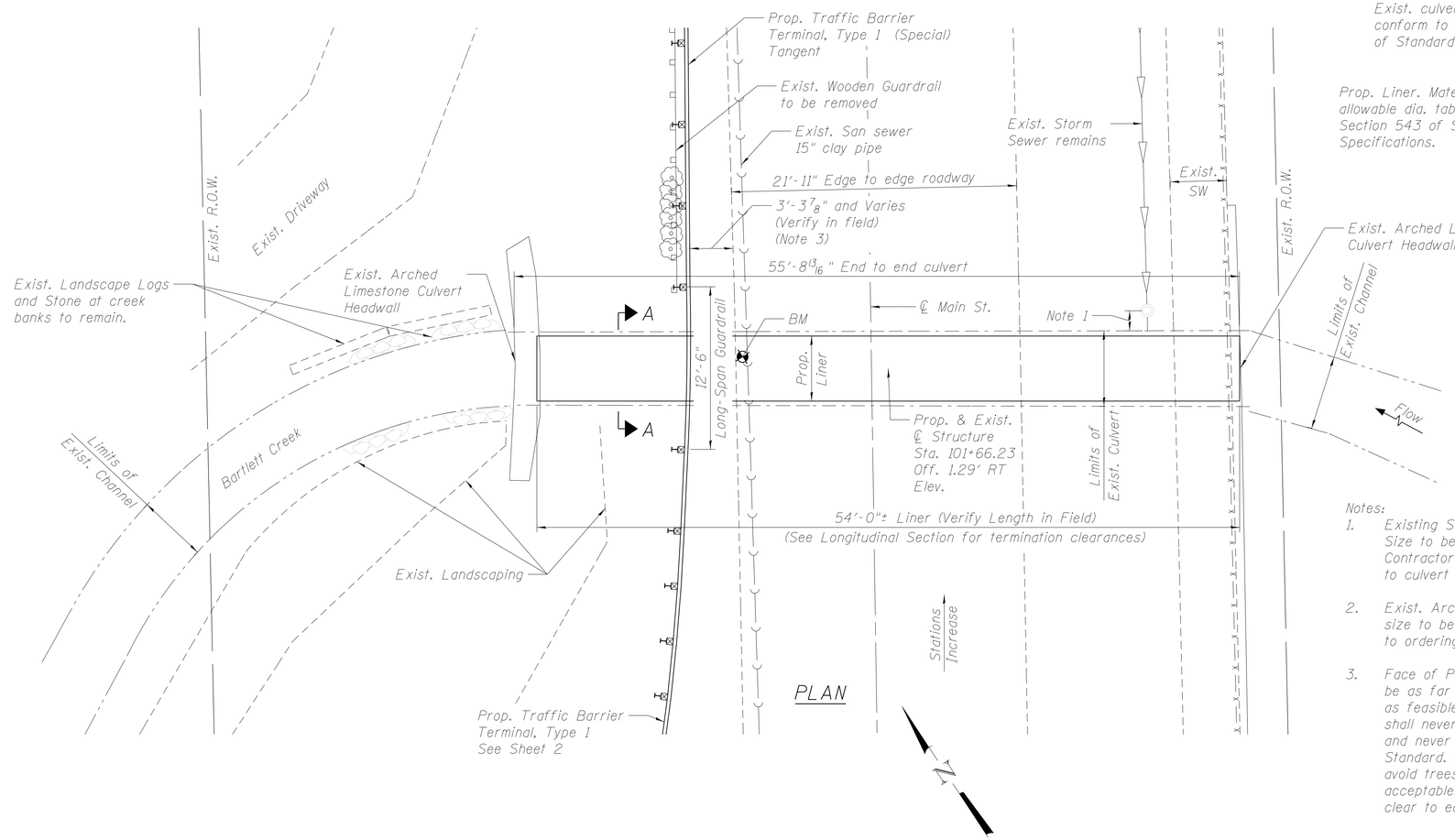

PLAN

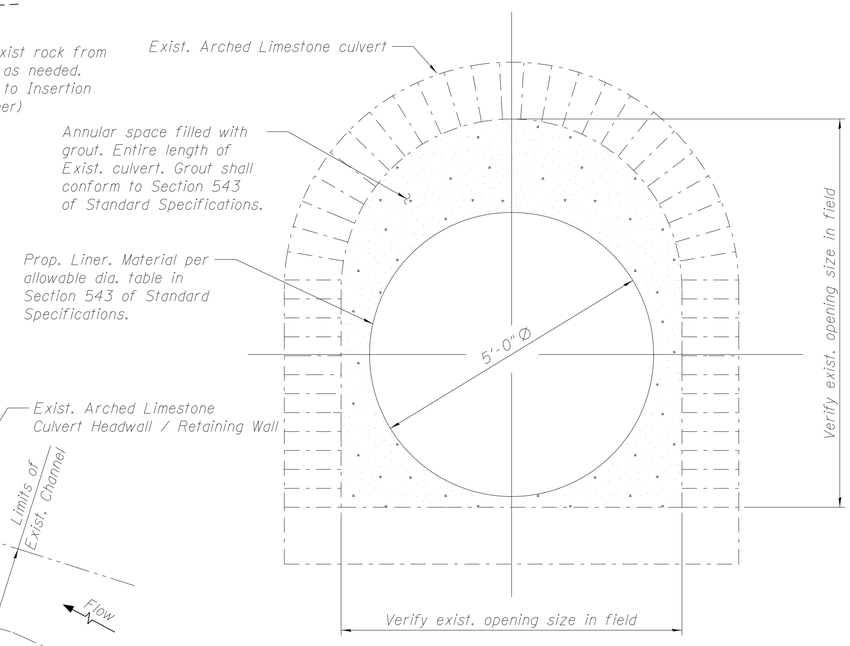

SECTION A-A

Notes:

1. Existing Storm Manhole and pipe. Size to be determined in field. Contractor to maintain connection to culvert thru liner.
2. Exist. Arch Limestone Culvert size to be field verified prior to ordering liner size.
3. Face of Proposed Guardrail shall be as far from edge of roadway as feasible, distance will vary, but shall never be less than 2'-0" and never more than the IDOT Standard. Adjustment in field to avoid trees and other conflicts are acceptable, so long as 2'-0" min. clear to edge of roadway is met.

GENERAL PLAN AND ELEVATION
MAIN STREET OVER
BARTLETT CREEK
VILLAGE OF OSWEGO
KENDALL COUNTY
STA. 101+66.25

COMPANY NAME: Robert G.Davies
PROJECT CONTACT: Village of Oswego
CLIENT: 3/24/2015 2:06:54 PM
DATE PLOTTED: 8640328_Main_GPE_001.dgn
FILE NAME: pdf.pltt
PLOT DRIVER: Struct 11x17.tbl
PEN TABLE:

HRGreen
HRGreen.com
Illinois Professional Design Firm # 184-001322

USER NAME = sconnor	DESIGNED - SEC	REVISED -	
	CHECKED - RGD	REVISED -	
PLOT SCALE =	DRAWN - WJH	REVISED -	
PLOT DATE = 3/24/2015	CHECKED - 3/24/15	REVISED -	

VILLAGE OF OSWEGO

SHEET NO. OF SHEETS

F.A.U. RTE.	SECTION	COUNTY	TOTAL SHEETS	SHEET NO.
			6	3
		CONTRACT NO. Kendall		
		ILLINOIS		

Benchmark:
GPS Control:
N: 1826680.3570
E: 978603.3320
Elev. 631.295

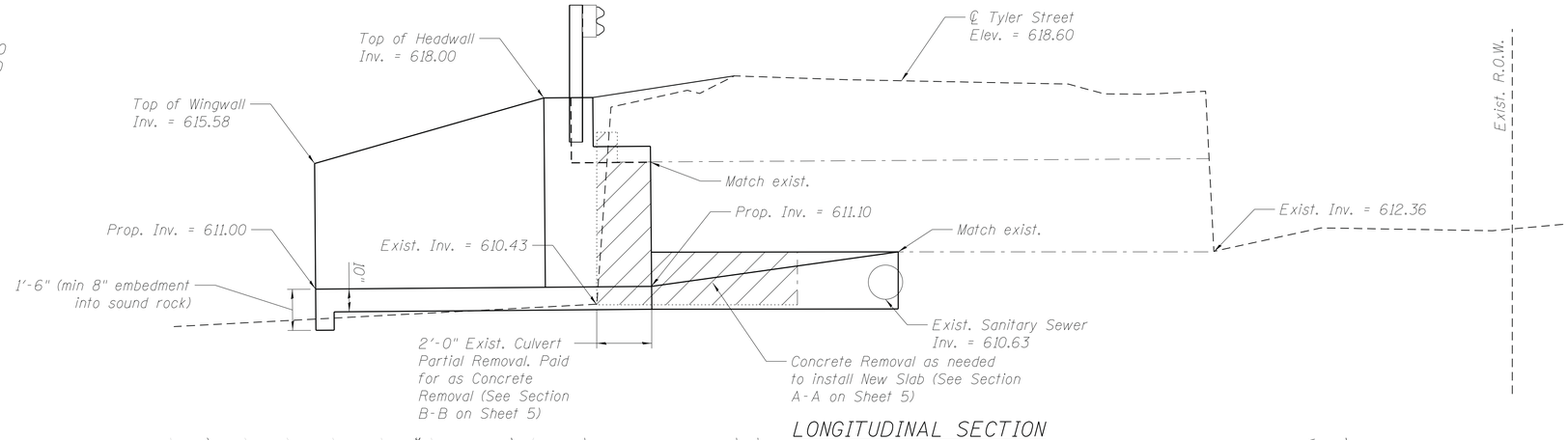

LONGITUDINAL SECTION

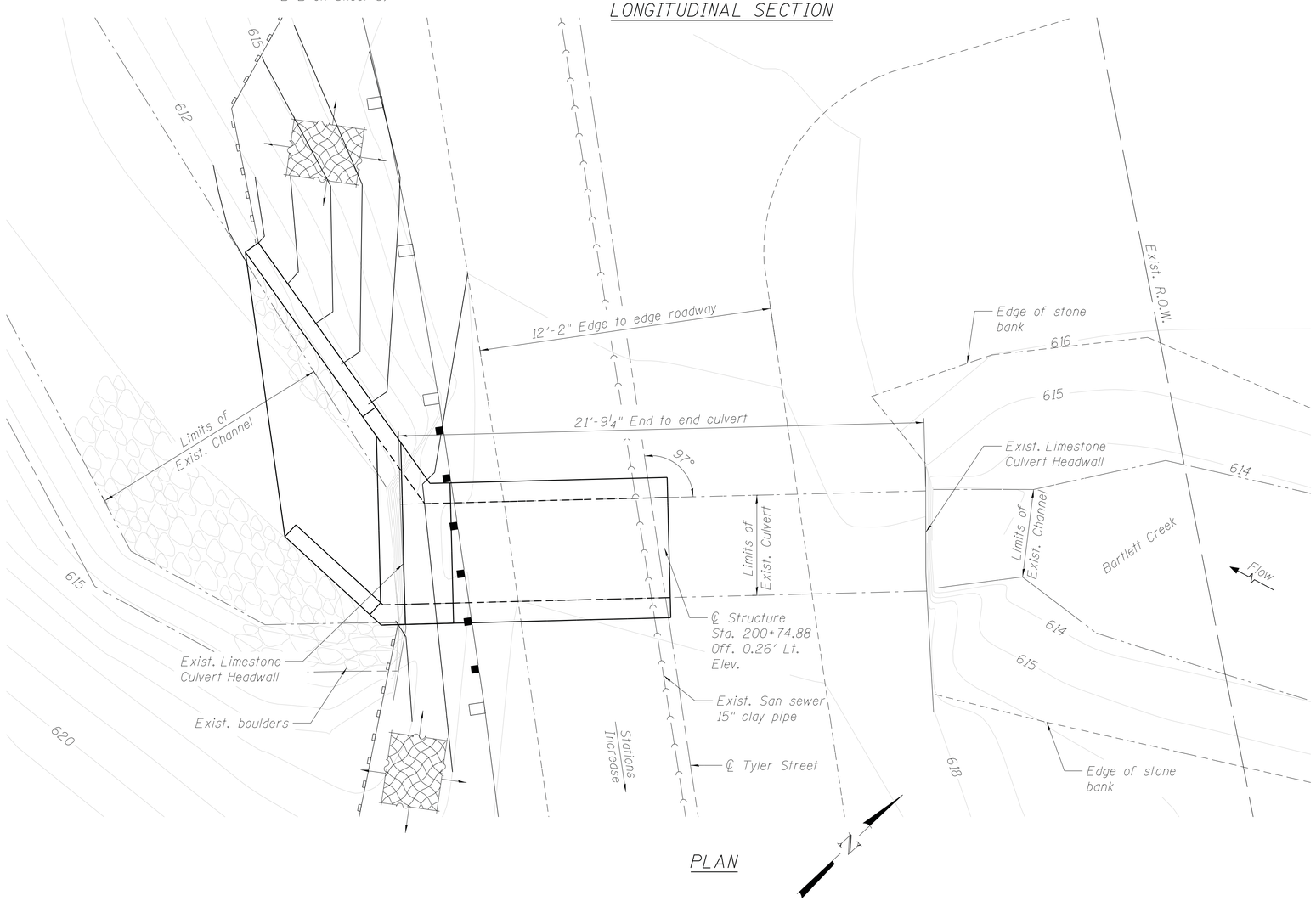

PLAN

DESIGN SPECIFICATIONS

2012 AASHTO LRFD Bridge Design
Specifications, 6th Edition with 2015 Interims

LOADING HL-93

Allow 50#/sq. ft. for future wearing surface.

DESIGN STRESSES

FIELD UNITS

f'c = 3,500 psi
fy = 60,000 psi (Reinforcement)

BILL OF MATERIALS

ITEM	UNIT	TOTAL
Box Culvert End Section, Culvert No. 1	Each	1
Concrete Removal	Cu. Yd.	3.5

Existing:
The existing structure consists of a concrete box culvert (possibly lining an older dry stacked limestone arch). The culvert is 22 feet long by 3 feet high by 4 feet wide (upstream end) and 5 feet high by 4 feet wide (downstream end). Roadway will be closed during construction.

LEGEND

Erosion Control Blanket

Concrete Removal

Perimeter Erosion Barrier to be installed around the disturbed areas. Incidental to Project Costs.

GENERAL PLAN AND ELEVATION
TYLER STREET OVER
BARTLETT CREEK
VILLAGE OF OSWEGO
KENDALL COUNTY
STA. 200+74.88

COMPANY NAME: Robert G.Davies
PROJECT CONTACT: Village of Oswego
CLIENT: 3/24/2015 2:07:02 PM
DATE PLOTTED: 8614032B_TYL_GPE_001.dgn
FILE NAME: pdf.pit
PLOT DRIVER: Struct 11x17.tbl
PEN TABLE:

HRGreen
HRGreen.com
Illinois Professional Design Firm
184-001322

USER NAME = scannor	DESIGNED - SEC	REVISED -	
	CHECKED - RGD	REVISED -	
PLOT SCALE =	DRAWN - WJH	REVISED -	
PLOT DATE = 3/24/2015	CHECKED - 3/24/15	REVISED -	

VILLAGE OF OSWEGO

SHEET NO. OF SHEETS

F.A.U. RTE.	SECTION	COUNTY	TOTAL SHEETS	SHEET NO.
			6	4
		CONTRACT NO. Kendall		
		ILLINOIS		

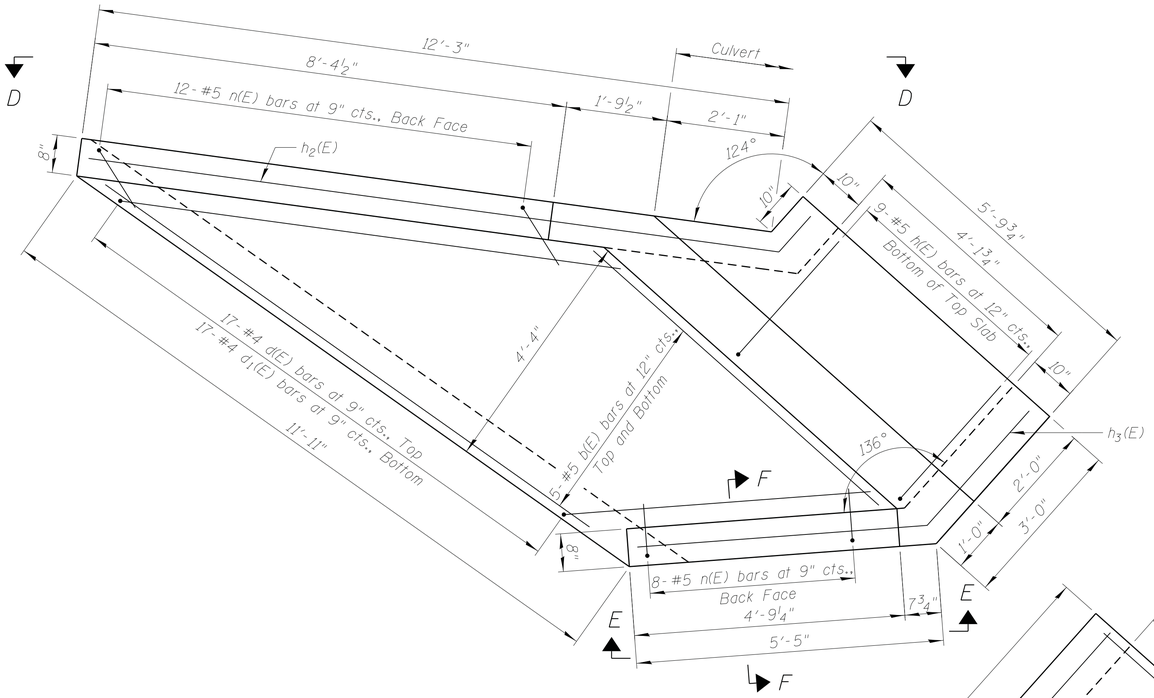

END SECTION PLAN

Box Culvert End Sections, Culvert No. 1

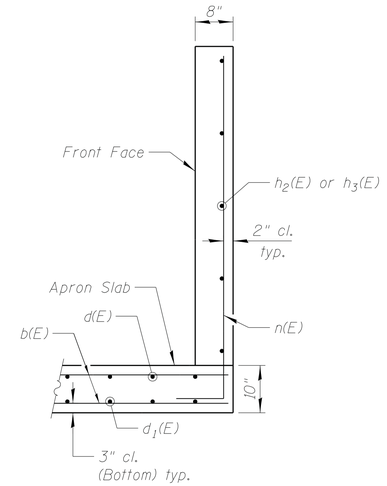

SECTION F-F

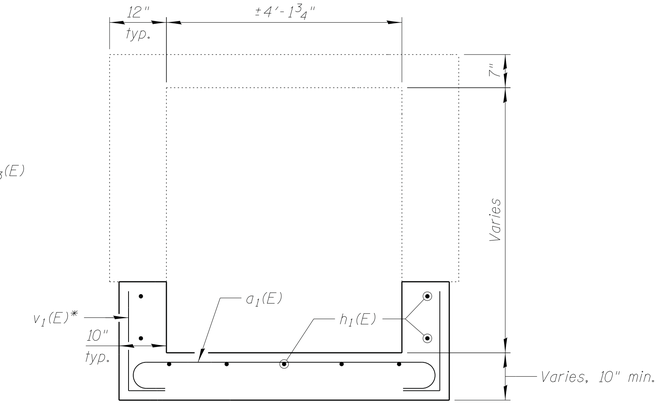

SECTION A-A

* Cut to Fit

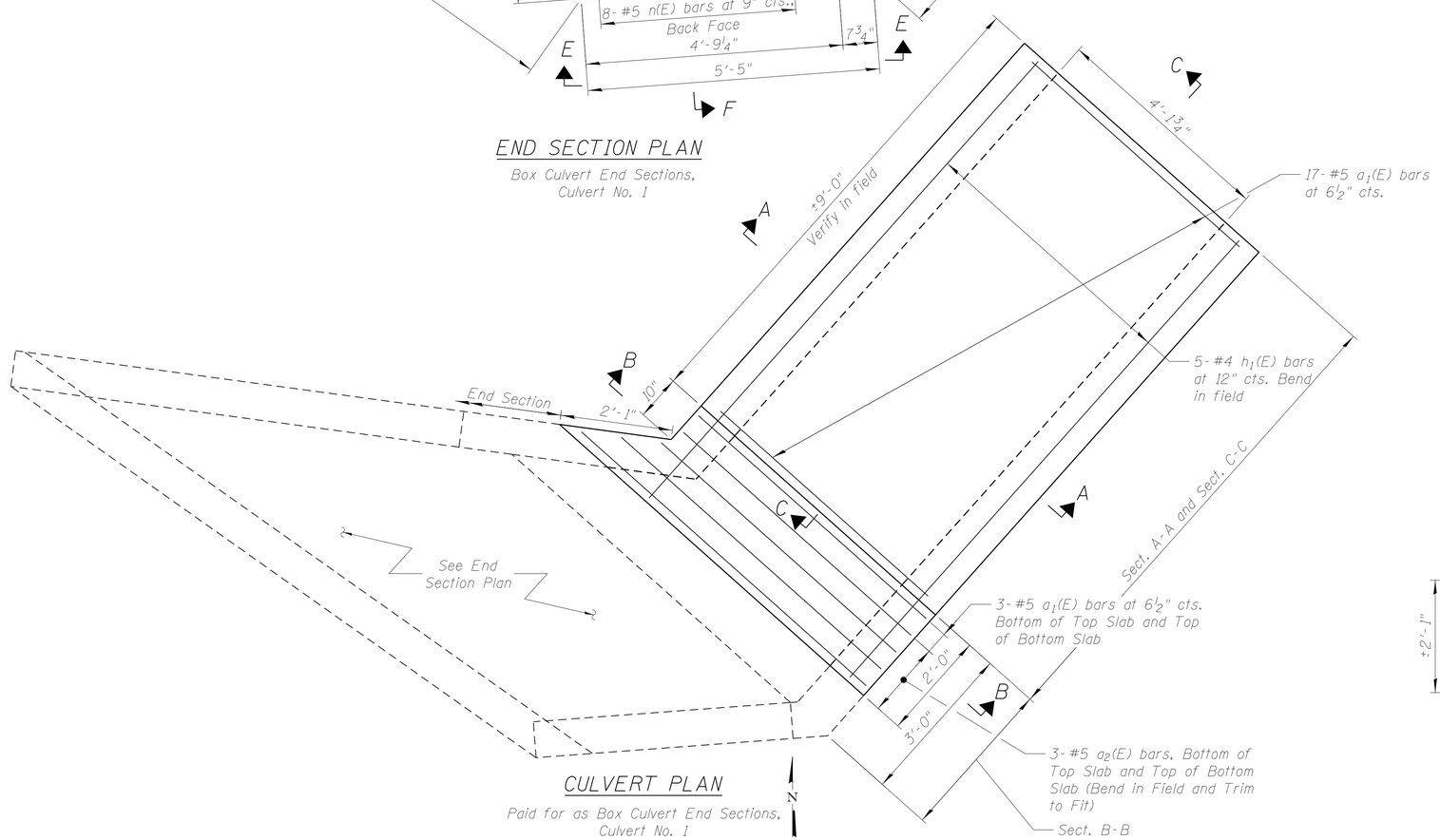

CULVERT PLAN

Paid for as Box Culvert End Sections, Culvert No. 1

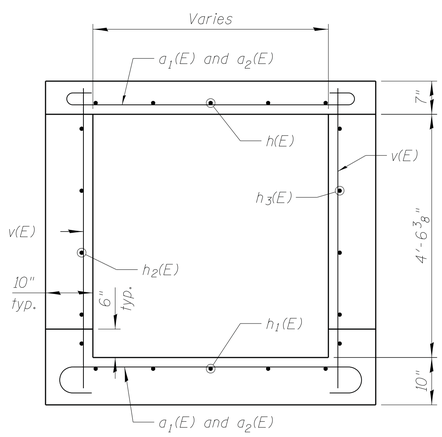

SECTION B-B

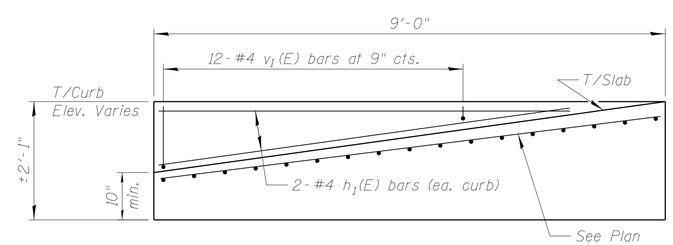

SECTION C-C

COMPANY NAME: HRGreen
PROJECT CONTACT: Robert G.Davies
CLIENT: Village of Oswego
DATE PLOTTED: 3/24/2015 2:07:09 PM
FILE NAME: 86140328_TYL_DET_001.dgn
PLOT DRIVER: pdfcplt
PEN TABLES: Struct 11x17.tbl

HRGreen.com
Illinois Professional Design Firm # 184-001322

USER NAME = scannor	DESIGNED - SEC	REVISED -	
	CHECKED - RGD	REVISED -	
PLOT SCALE =	DRAWN - WJH	REVISED -	
PLOT DATE = 3/24/2015	CHECKED - 3/24/15	REVISED -	

VILLAGE OF OSWEGO

CULVERT DETAILS
TYLER STREET CULVERT

SHEET NO. OF SHEETS

F.A.U. RTE.	SECTION	COUNTY	TOTAL SHEETS	SHEET NO.
			6	5
		CONTRACT NO. Kendall		
		ILLINOIS		

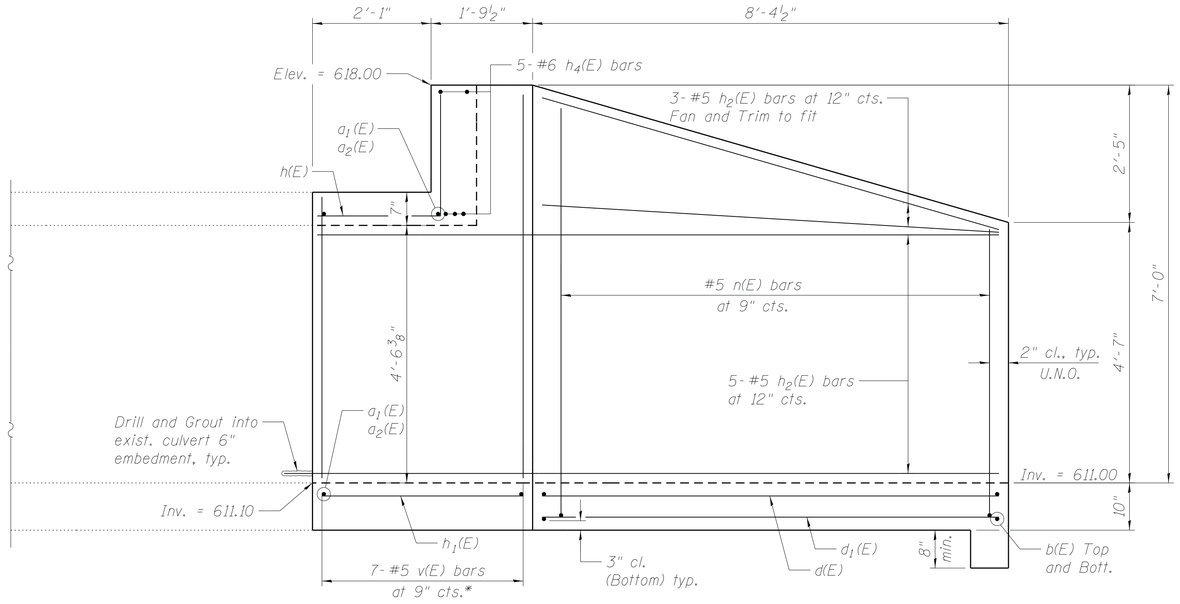

SECTION D-D

* Cut to Fit

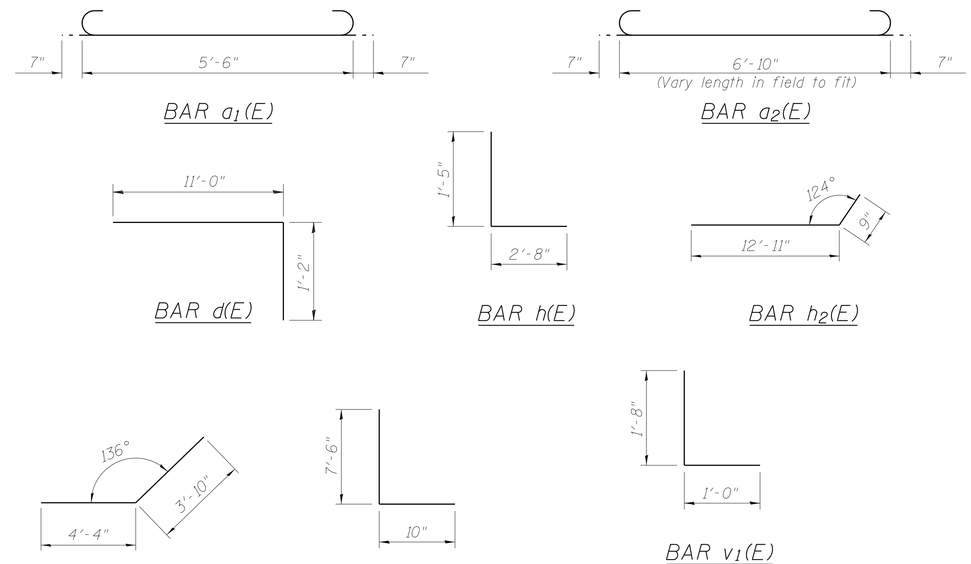

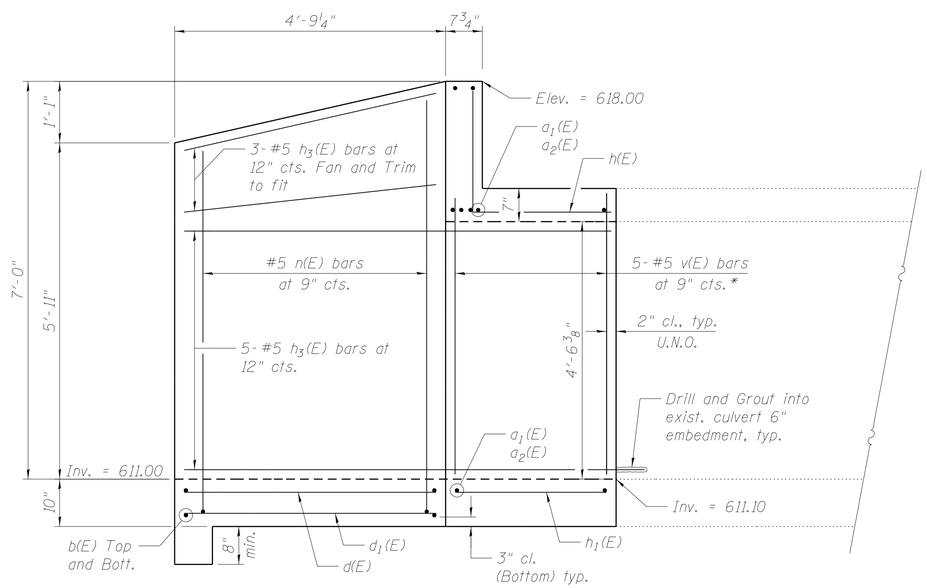

SECTION E-E

* Cut to Fit

BILL OF MATERIALS

Bar	No.	Size	Length	Shape
a_1(E)	23	#5	6'- 8"	
a_2(E)	6	#5	9'- 8"	
b(E)	10	#5	11'- 7"	
d (E)	17	#4	12'- 2"	
d_1 (E)	17	#4	11'- 0"	
h (E)	9	#5	4'- 1"	
h_1 (E)	9	#4	11'- 8"	
h_2 (E)	8	#5	13'- 8"	
h_3 (E)	8	#5	7'- 8"	
h_4 (E)	5	#6	8'- 8"	
n (E)	20	#5	8'- 4"	
v (E)	12	#5	5'- 7"	
v_1 (E)	24	#4	3'- 6"	
Box Culvert End Section, Culvert No. 1			Each	1
Reinforcement Bars, Epoxy Coated			Pound	1,260

COMPANY NAME: Robert G.Davies
PROJECT CONTACT: Village of Oswego
CLIENT:
DATE PLOTTED: 3/24/2015 2:01:16 PM
FILE NAME: 86140328_TYL_DET_002.dgn
PLOT DRIVER: pdf.pltt
PEN TABLE: Struct 11x17.tbl

HRGreen

HRGreen.com
Illinois Professional Design Firm
184-001322

USER NAME = sconnor	DESIGNED - SEC	REVISED -	
	CHECKED - RGD	REVISED -	
PLOT SCALE =	DRAWN - WJH	REVISED -	
PLOT DATE = 3/24/2015	CHECKED - 3/24/15	REVISED -	

VILLAGE OF OSWEGO

CULVERT DETAILS
TYLER STREET CULVERT

SHEET NO. OF SHEETS

F.A.U. RTE.	SECTION	COUNTY	TOTAL SHEETS	SHEET NO.
			6	6
		CONTRACT NO. Kendall		
	ILLINOIS			

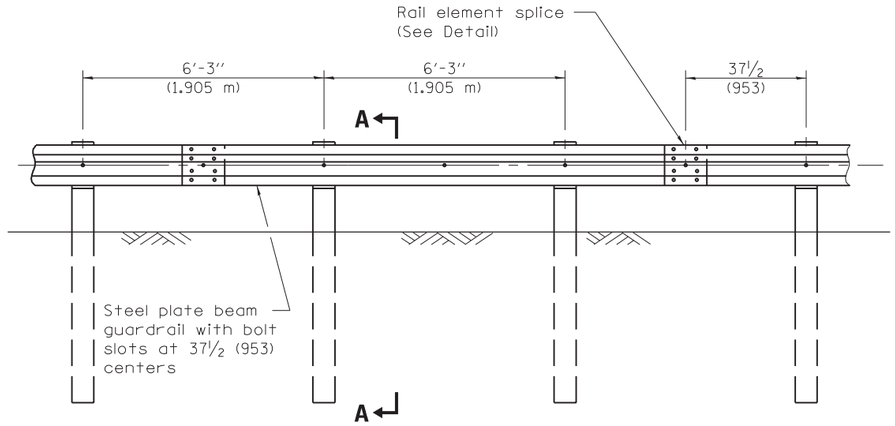

ELEVATION

TYPE A

6'-3" (1.905 m) Typical post spacing

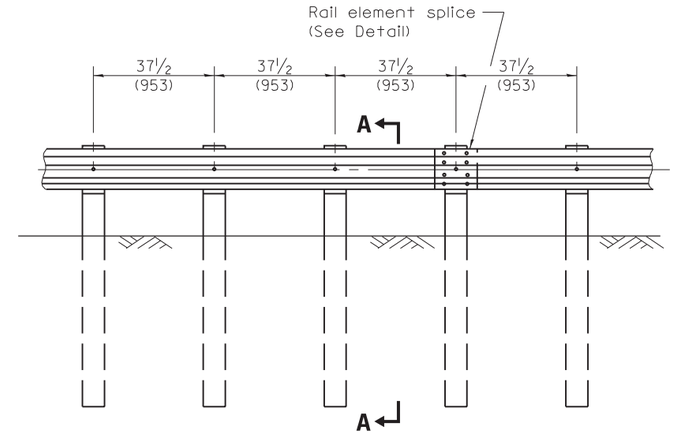

ELEVATION

TYPE B

37½ (953) Closed post spacing

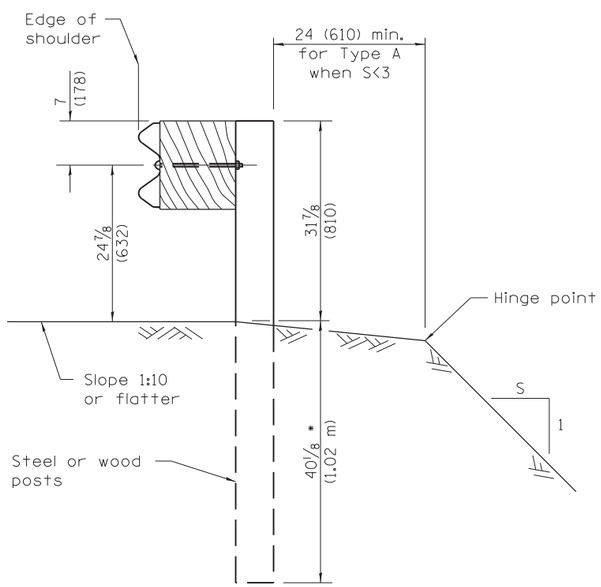

SECTION A–A

* When "S" is less than 3 and the distance from the back of post is less than 24 (610), the post shall be steel and the embedment shall be 76⅛ (1934).

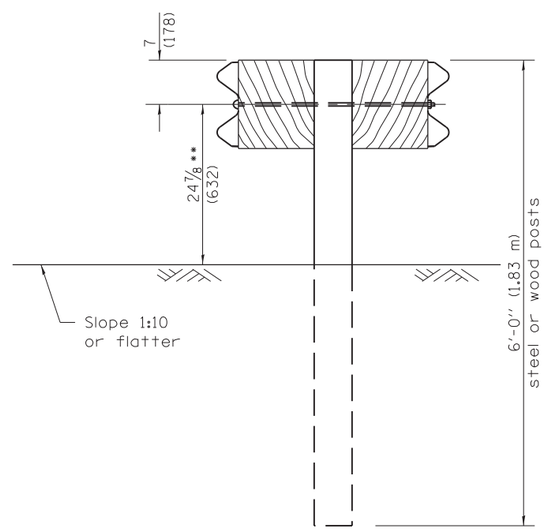

SECTION B–B

** When connecting Type D guardrail to an impact attenuator, adjust this dimension to 21⅞ (556) over a distance of 25'-0" (7.62 m) from point of connection.

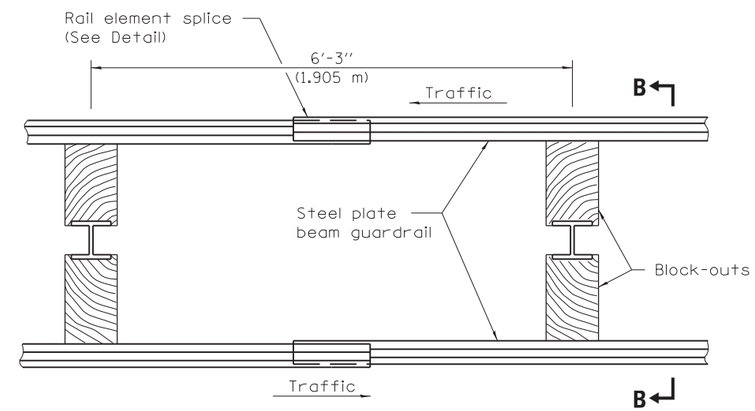

PLAN

TYPE D

Double steel plate beam guardrail
6'-3" (1.905 m) typical post spacing

GENERAL NOTES

All slope ratios are expressed as units of vertical displacement to units of horizontal displacement (V:H).

All dimensions are in inches (millimeters) unless otherwise shown.

Illinois Department of Transportation

PASSED January 1, 2012
Michael Brand
ENGINEER OF POLICY AND PROCEDURES

APPROVED January 1, 2012
Scott E. Sorkin
ENGINEER OF DESIGN AND ENVIRONMENT

ISSUED 1-1-97

DATE	REVISIONS
1-1-12	Added req. for 9 ft. posts
	to be steel. Modified set
	back of g'rail behind curb.
1-1-11	Added note to Section B-B
	for conn. to impact att.
	Revised table on Sheet 4.

STEEL PLATE BEAM GUARDRAIL

(Sheet 1 of 4)

STANDARD 630001–10

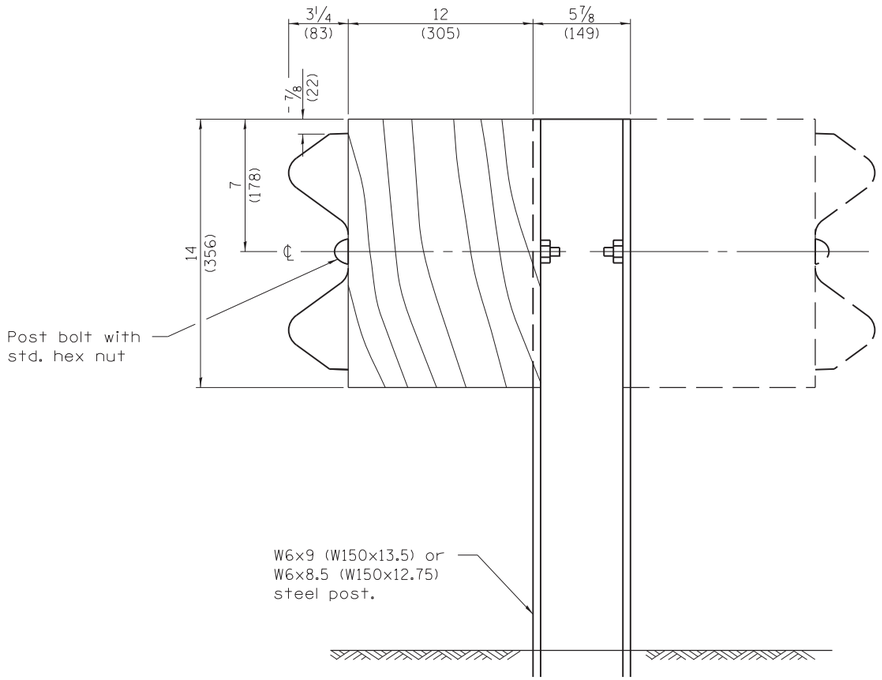

STEEL POST CONSTRUCTION

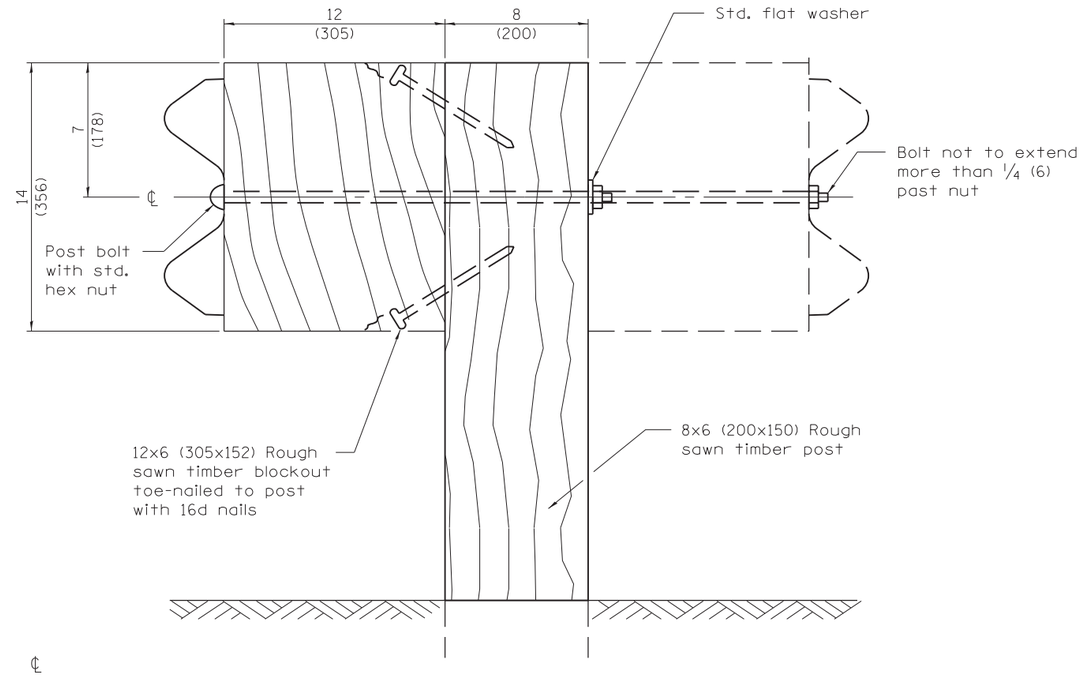

WOOD POST CONSTRUCTION

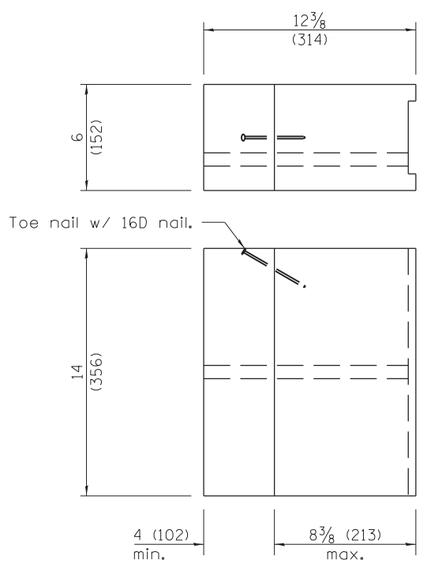

TWO-PIECE WOOD BLOCKOUT OPTION

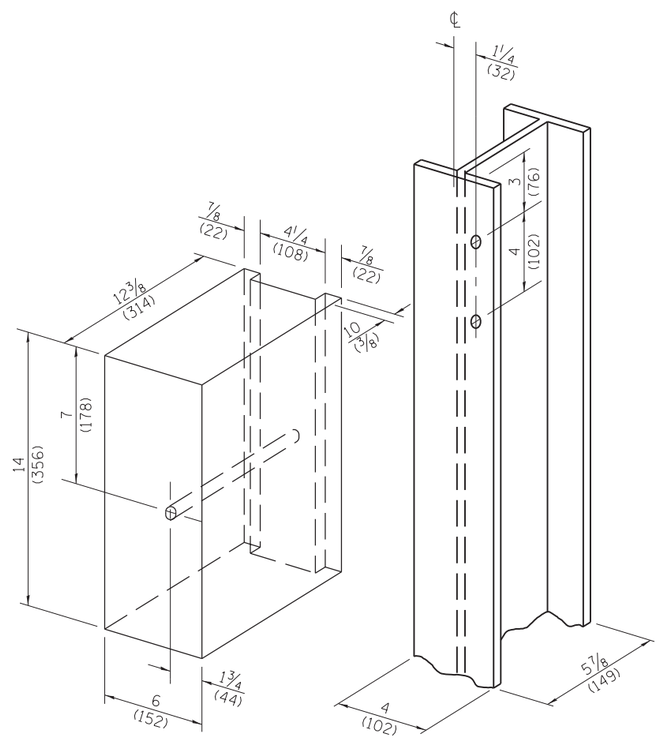

Note:
All holes 3/4 (20) dia.

WOOD BLOCK-OUT AND STEEL POST DETAILS

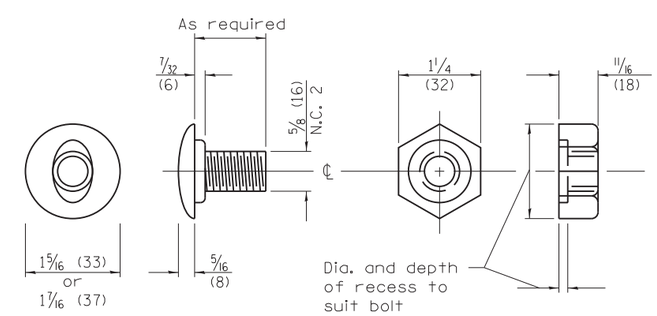

POST OR SPLICE BOLT & NUT

Illinois Department of Transportation

PASSED January 1, 2012
Michael Brand
ENGINEER OF POLICY AND PROCEDURES
APPROVED January 1, 2012
Scott E. Stokes
ENGINEER OF DESIGN AND ENVIRONMENT

ISSUED 1-1-97

STEEL PLATE BEAM GUARDRAIL

(Sheet 2 of 4)

STANDARD 630001-10

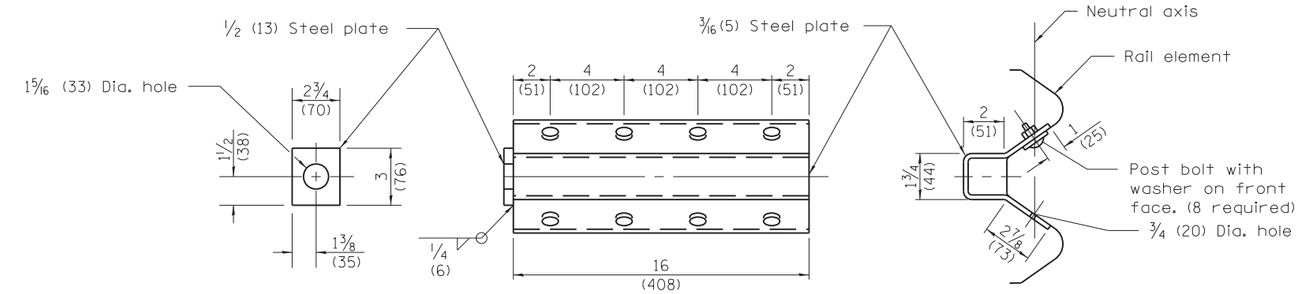

NOTE
Anchor plate T shall be used to attach cable assembly to guardrail when required on traffic barrier terminals.

ANCHOR PLATE T DETAILS

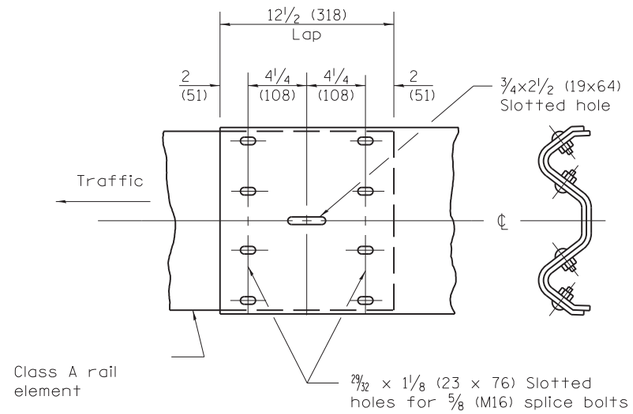

RAIL ELEMENT SPLICE

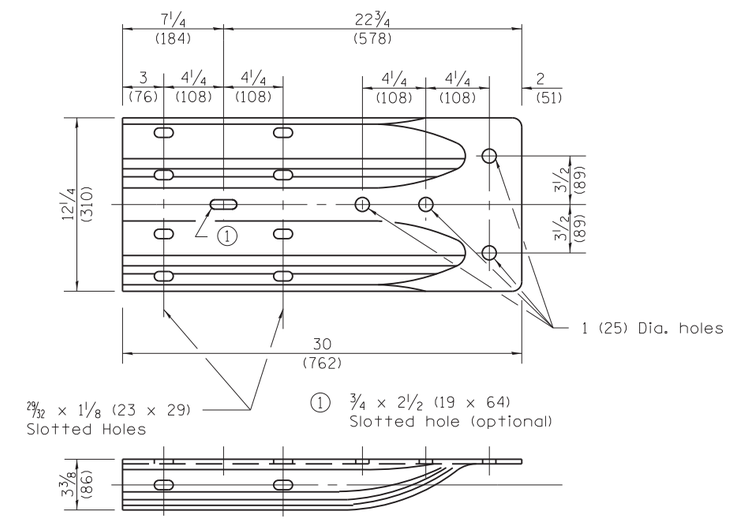

ALTERNATE END SHOE

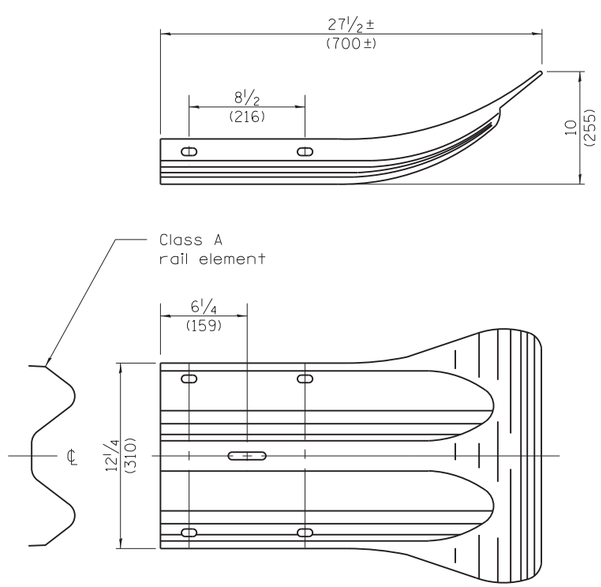

END SECTION

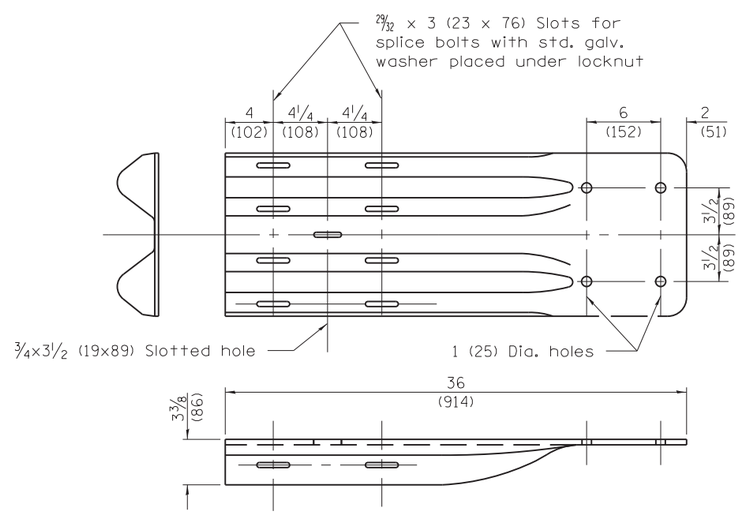

NOTE
When end shoe is attached to a bridge parapet which has an expansion joint, the bolts shall be provided with a locknut or double nut and shall be tightened only to a point that will allow guardrail movement.

The standard end shoe shall be attached to the concrete with pre-drilled or self-drilling anchor bolts. The anchor cone shall be set flush with the surface of the concrete.

Externally threaded studs protruding from the surface of the concrete will not be permitted.

END SHOE

Illinois Department of Transportation

PASSED January 1, 2012
Michael Brand
ENGINEER OF POLICY AND PROCEDURES

APPROVED January 1, 2012
Scott E. Stokes
ENGINEER OF DESIGN AND ENVIRONMENT

ISSUED 1-1-97

STEEL PLATE BEAM GUARDRAIL

(Sheet 3 of 4)

STANDARD 630001–10

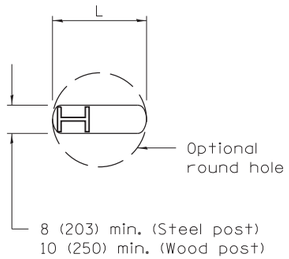

PLAN

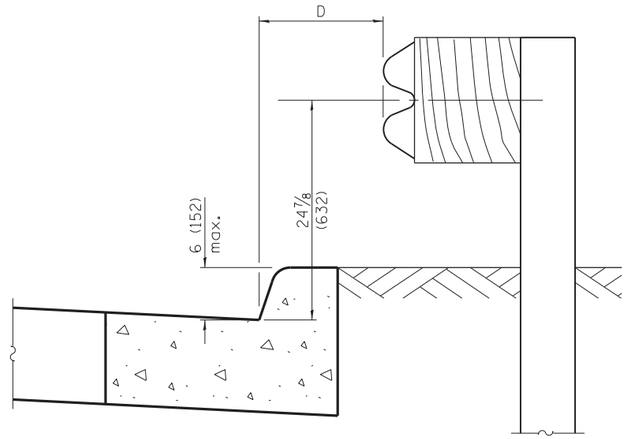

0 ≤ D < 4'–0" (1.2 m)

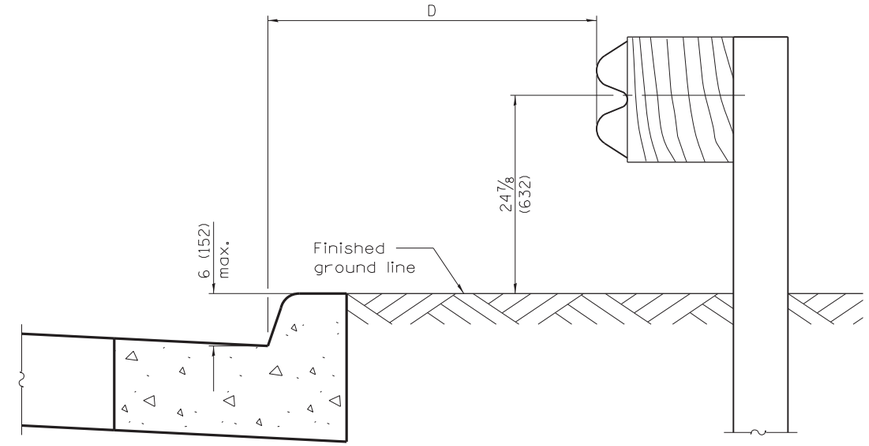

4'–0" (1.2 m) ≤ D ≤ 12'–0" (3.7 m)

GUARDRAIL PLACED BEHIND CURB

Note: 'D' shall not exceed 6 (152) for design speeds greater than 45 mph.

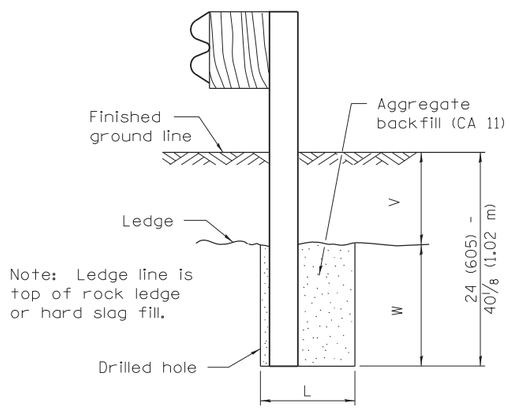

ELEVATION

FOOTING FOR POST WHEN IMPERVIOUS MATERIAL IS ENCOUNTERED

V	W	L	
		Steel Post	Wood Post
0 - 6 (0 - 152)	24 (610)	21 (530)	23 (580)
> 6 - 18 (> 152 - 458)	18 (458)	14 1/2 (368)	16 1/2 (419)
> 18 - 31 (> 458 - 787)	12 (305)	8 (203)	10 (250)
> 31 - 40 1/8 (> 787 - 1.02 m)	12 - 0 (305 - 0)	8 (203)	10 (250)

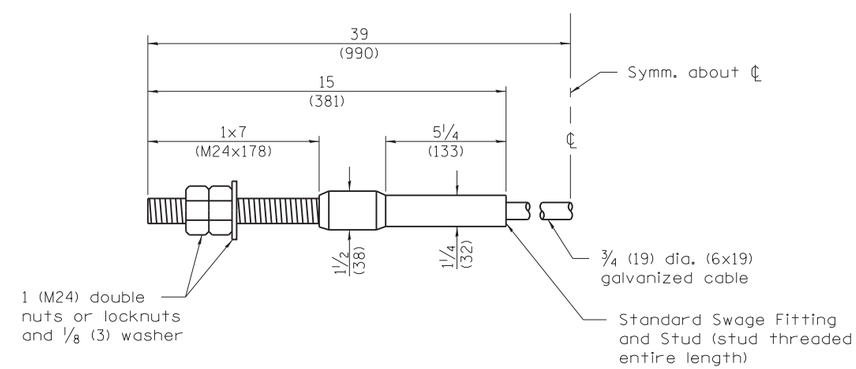

CABLE ASSEMBLY

(40,000 lbs. (18,100 kg) min. breaking strength)
Tighten to taut tension.

Illinois Department of Transportation

PASSED January 1, 2012
Michael Brand
ENGINEER OF POLICY AND PROCEDURES
APPROVED January 1, 2012
Scott Sobaski
ENGINEER OF DESIGN AND ENVIRONMENT

ISSUED 1-1-97

STEEL PLATE BEAM GUARDRAIL

(Sheet 4 of 4)

STANDARD 630001–10

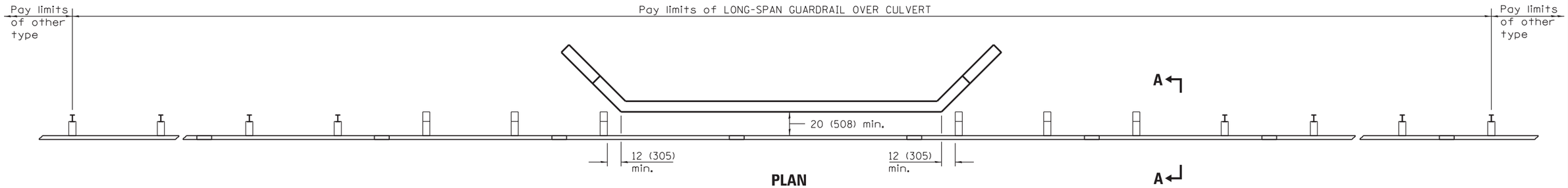

PLAN

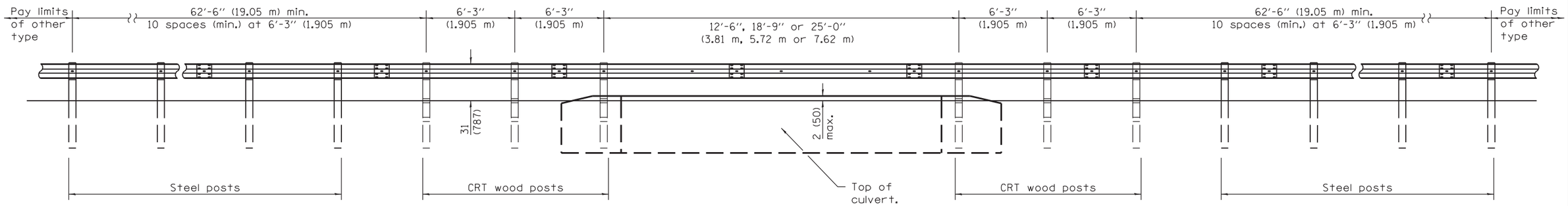

ELEVATION

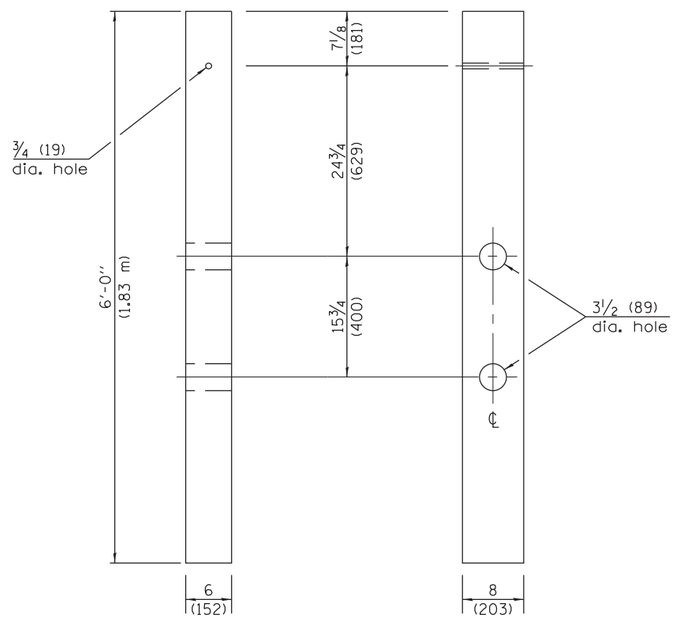

FRONT **SIDE**

CRT WOOD POST

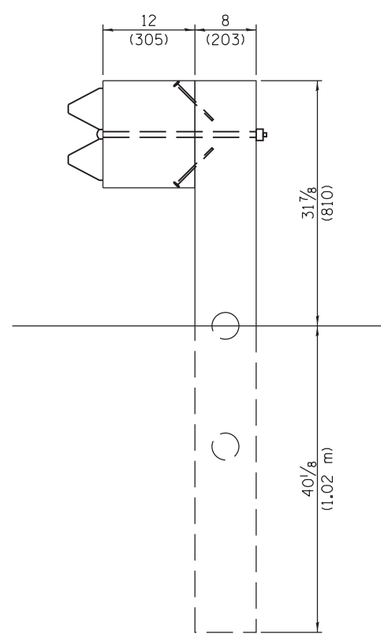

SECTION A–A

GENERAL NOTES

See Standard 630001 for details of guardrail not shown.

All dimensions are in inches (millimeters) unless otherwise shown.

Illinois Department of Transportation

PASSED January 1, 2013
Michael Brand
ENGINEER OF POLICY AND PROCEDURES
APPROVED January 1, 2013
ENGINEER OF DESIGN AND ENVIRONMENT

ISSUED 1-1-11

DATE	REVISIONS
1-1-13	Added min. dim. from guard-
	rail to headwall. Added dim.
	to section A-A.
1-1-11	New standard.

LONG–SPAN GUARDRAIL OVER CULVERT

STANDARD 630106–01

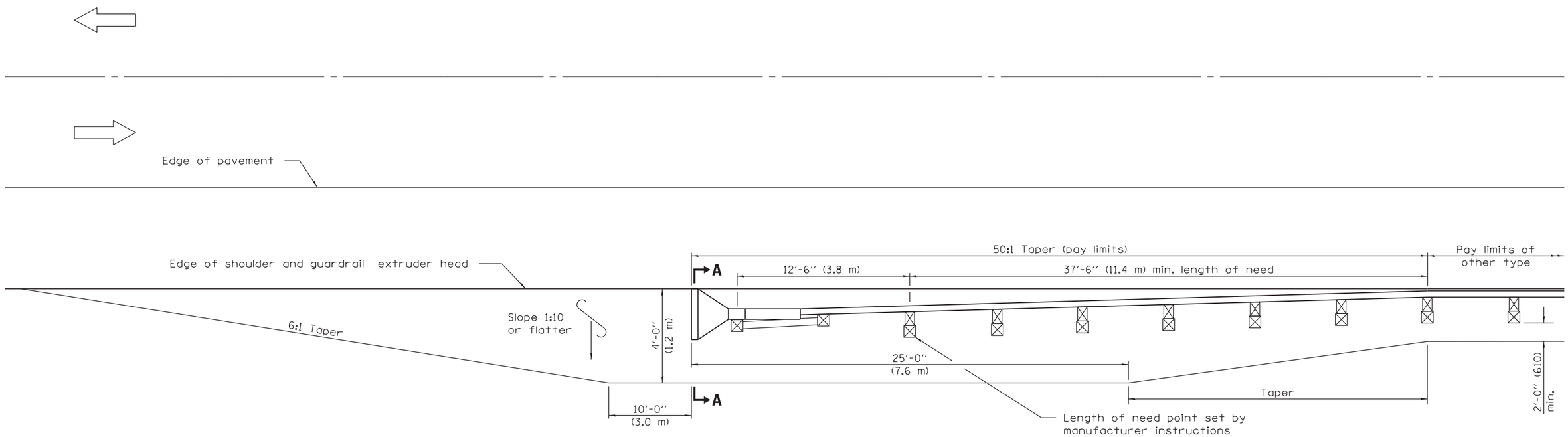

SHOULDER WIDENING TRANSITION FOR TANGENT TERMINAL

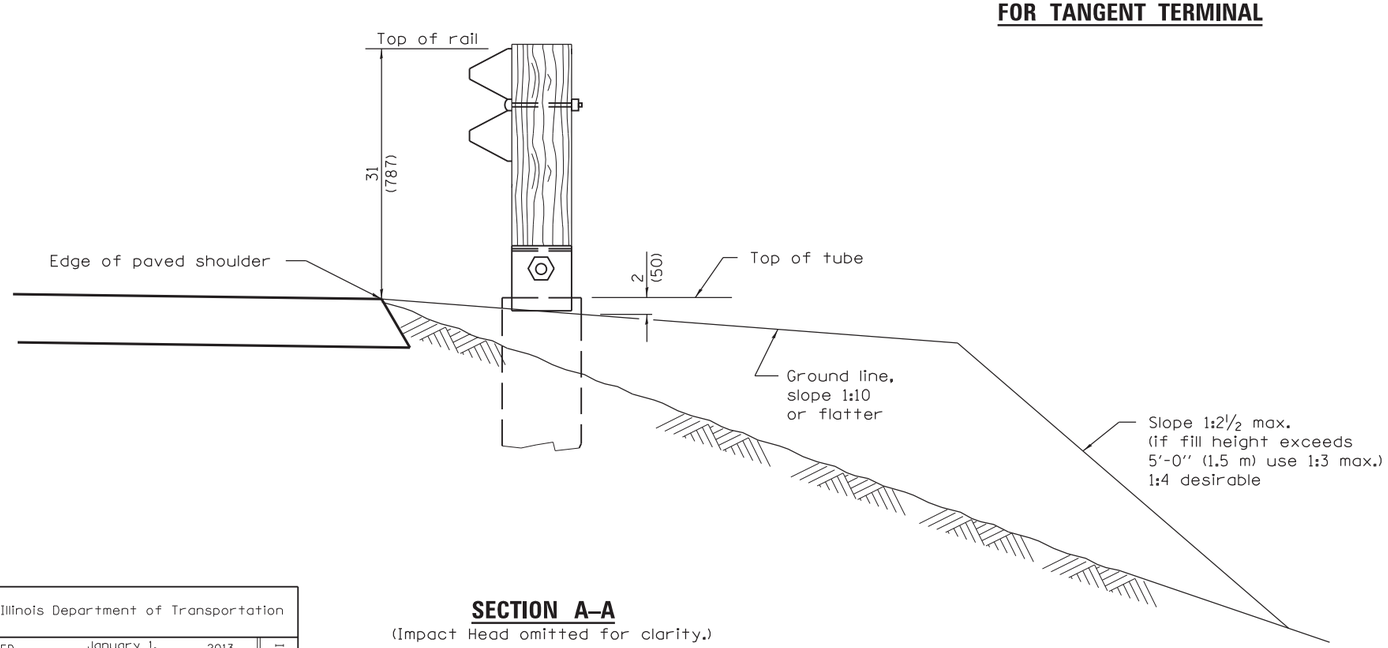

SECTION A–A

(Impact Head omitted for clarity.)

GENERAL NOTES

50:1 Taper required so the guardrail head will not encroach on the shoulder.

All slope ratios are expressed as units of vertical displacement to units of horizontal displacement (V:H).

All dimensions are in inches (millimeters) unless otherwise shown.

Illinois Department of Transportation

PASSED January 1, 2013
Michael Brand
ENGINEER OF POLICY AND PROCEDURES

APPROVED January 1, 2013
ENGINEER OF DESIGN AND ENVIRONMENT

ISSUED 1-1-00

DATE	REVISIONS
1-1-13	Modified dimensioning of terminal.
1-1-09	Switched units to English (metric).

SHOULDER WIDENING FOR TYPE 1 (SPECIAL) GUARDRAIL TERMINALS

(Sheet 1 of 2)

STANDARD 630301–06

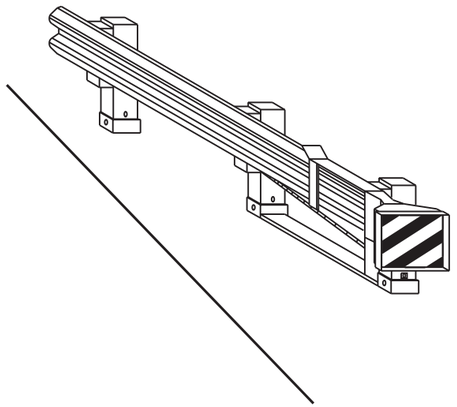

CASE I

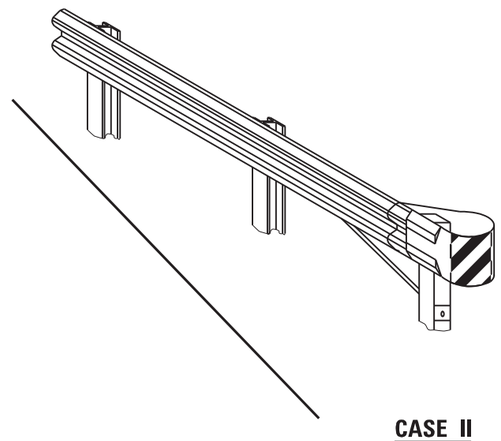

CASE II

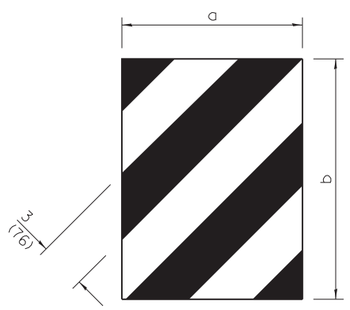

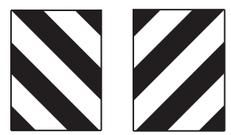

DIMENSION	CASE I	CASE II
a	*	18 (450)
b	*	16 (406)

* The width and height (a, b) of the terminal marker shall be within approximately 1 (25) of the outer edge of the terminal end, with a minimum reflective area of 288 sq. in. (0.18 m²).

TERMINAL MARKER DETAILS

Color: Black / Yellow reflectorized

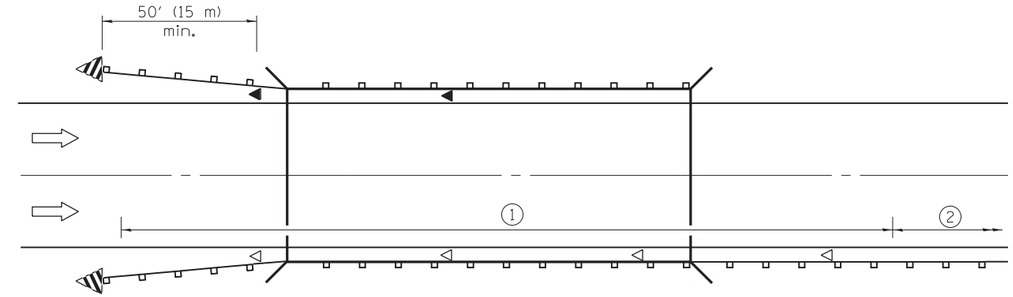

1. Spacing 80 ft. (24 m) max. for first 400 ft. (122 m) or curve spacing shown in Standard 635001, whichever is less (min. 4 reflectors regardless of length).

2. After 400 ft. (122 m), transition to normal delineator spacing shown in Standard 635001, and continue as required.

ONE-WAY TRAFFIC

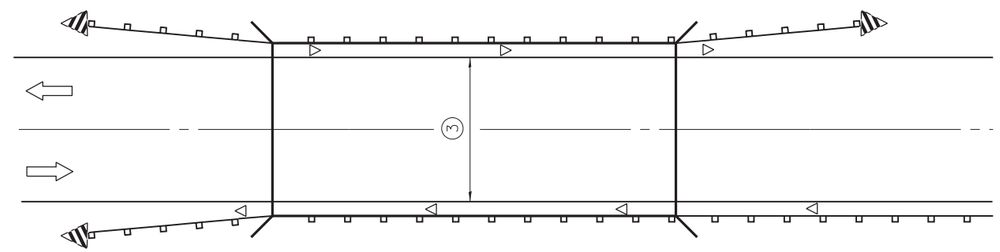

3. Bidirectional silver/silver should be used in lieu of monodirectional silver on both sides of two-lane bridges where the pavement is less than 24 (610) wider than the pavement approaching the bridge.

◁ Monodirectional crystal

◀ Monodirectional amber

Terminal Marker - Black/Yellow Left or Right as appropriate

TWO-WAY TRAFFIC

GUARDRAIL /BARRIER WALL / BRIDGE RAIL REFLECTIORS

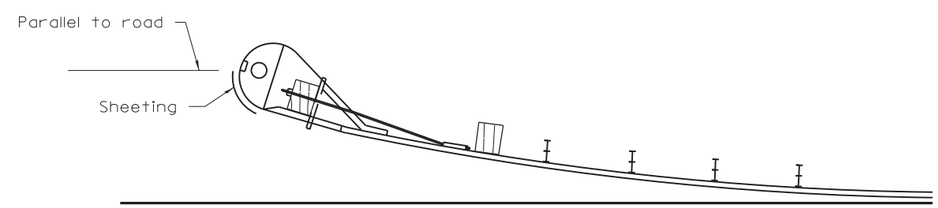

SHEETING POSITION: CASE II

All dimensions are in inches (millimeters) unless otherwise shown.

Illinois Department of Transportation

APPROVED January 1, 2009
ENGINEER OF OPERATIONS

APPROVED January 1, 2009
ENGINEER OF DESIGN AND ENVIRONMENT

ISSUED 1-1-2000

DATE	REVISIONS
1-1-09	Switched units to
	English (metric). Changed
	'white' to 'crystal' ref.
1-1-02	Revise Case I Dimension
	and removed alternate
	detail.

REFLECTOR AND TERMINAL MARKER PLACEMENT

STANDARD 635006–03

OFFSETS TO FACE OF RAIL		
Post	X ft (m)	Y ft (m)
1	37.22 (11.345)	4.0 (1.22)
2	31.09 (9.475)	2.79 (0.850)
3	24.92 (7.595)	1.79 (0.545)
4	20.79 (6.335)	1.25 (0.380)
5	16.64 (5.070)	0.80 (0.245)
6	12.49 (3.805)	0.45 (0.135)
7	6.25 (1.905)	0.11 (0.035)
8	0.00 (0.00)	0.00 (0.00)

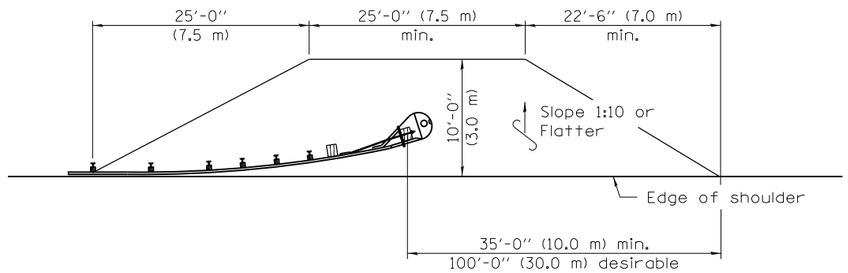

SHOULDER WIDENING TRANSITION

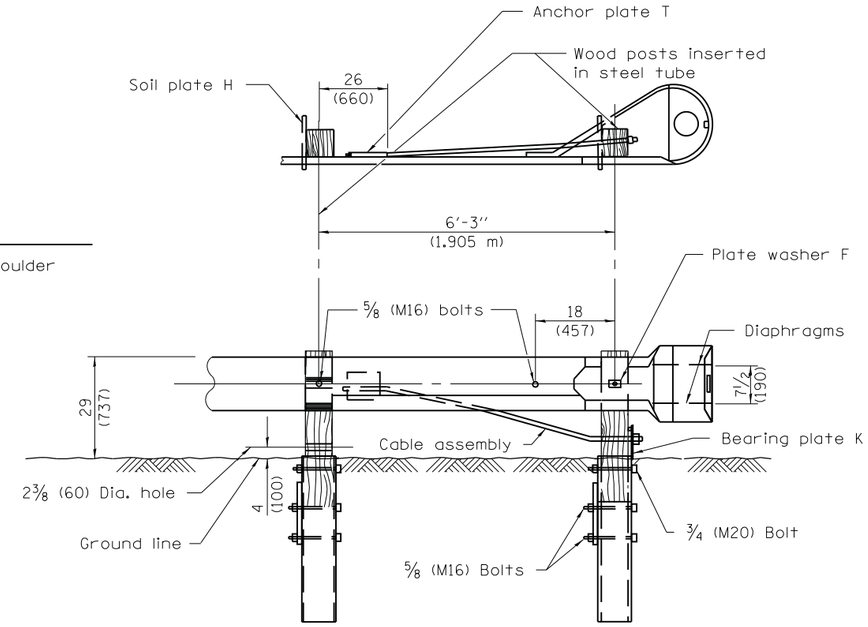

WOOD BREAKAWAY POSTS
TUBULAR STEEL FOUNDATIONS

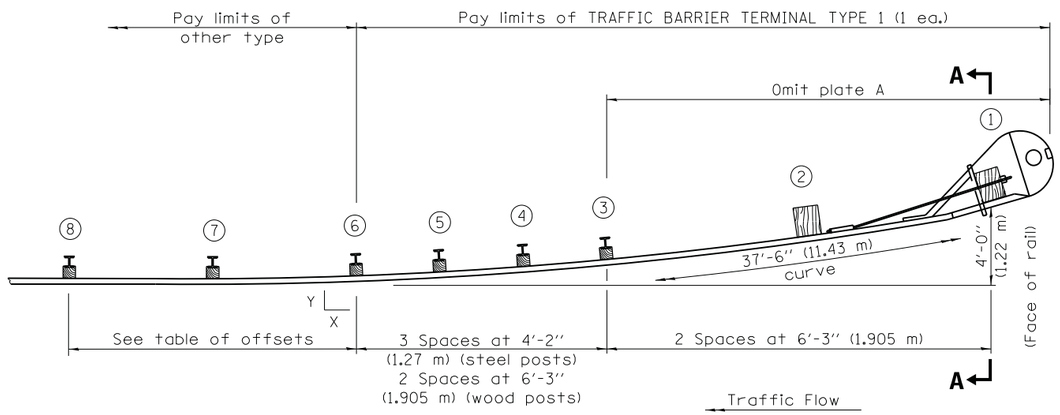

PLAN

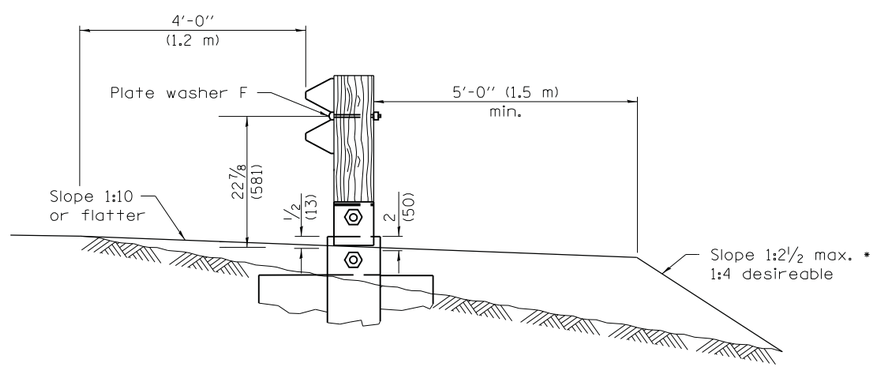

SECTION A–A

* If fill height exceeds 5'-0" (1.5 m) use 1:3 max.

GENERAL NOTES

See Standard B.L.R. 26 for details of guardrail not shown.

Posts at location 1 & 2 shall be wood breakaway posts. Posts other than 1 & 2 may be either standard wood posts or steel posts, at the option of the Contractor. If standard wood posts are used, one post shall be located midway between and in lieu of posts 4 & 5. The offset (Y) for this post shall be 12 (300).

A two-piece assembly may be substituted for the one piece nose shown above.

The bearing plate K shall be held in position by (2) two eightpenny nails driven into the post and bent over the top of the plate.

When this terminal is used with Standard 630001, the guardrail shall transition down to the height of the terminal prior to post 8.

All slope ratios are expressed as units of vertical displacement to units of horizontal displacement (V:H).

All dimensions are in inches (millimeters) unless otherwise shown.

Illinois Department of Transportation

APPROVED January 1, 2012
ENGINEER OF LOCAL ROADS AND STREETS
APPROVED January 1, 2012
ENGINEER OF DESIGN AND ENVIRONMENT

ISSUED 1-1-08

DATE	REVISIONS
1-1-12	Revised barrier terminal
	height and wood
	breakaway post.
1-1-09	Switched units to
	English (metric).

TRAFFIC BARRIER TERMINAL TYPE 1

(Sheet 1 of 2)

STANDARD B.L.R. 23–4

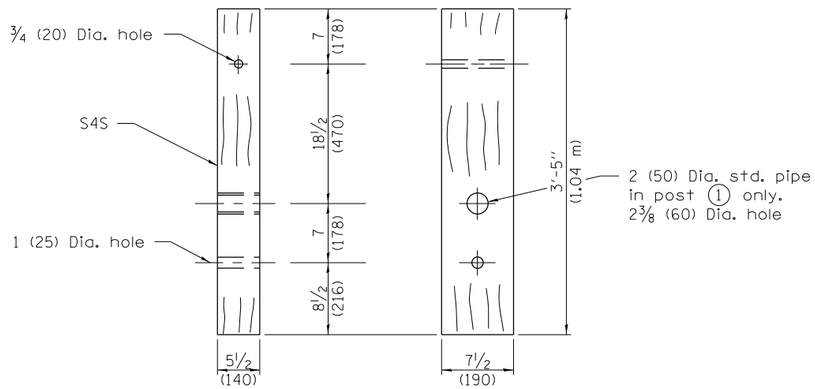

WOOD BREAKAWAY POST
(2 ea.)

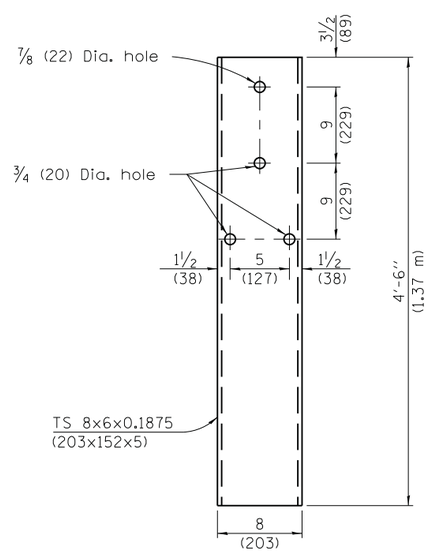

STEEL TUBE
(2 ea.)

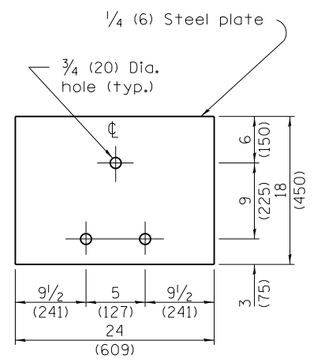

SOIL PLATE H
(2 ea.)

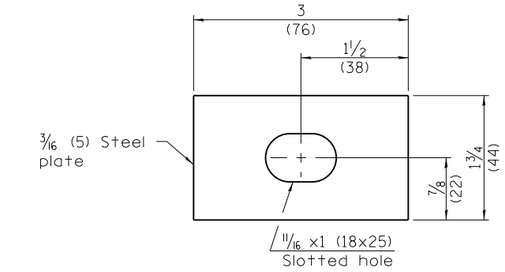

PLATE WASHER F
(1 ea.)

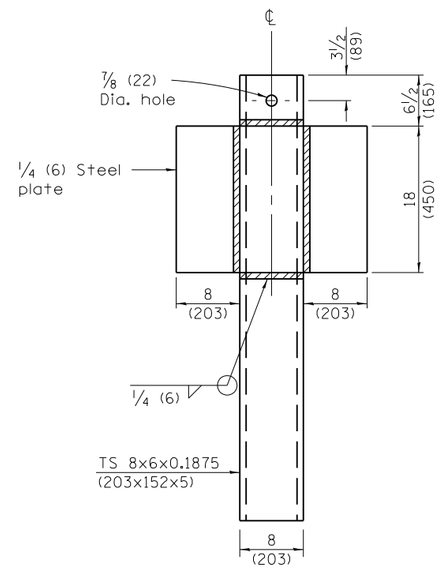

ALTERNATE SOIL PLATE CONNECTION

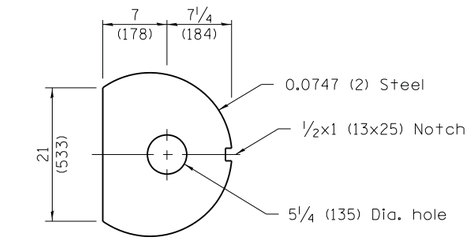

DIAPHRAGM
(2 ea.)

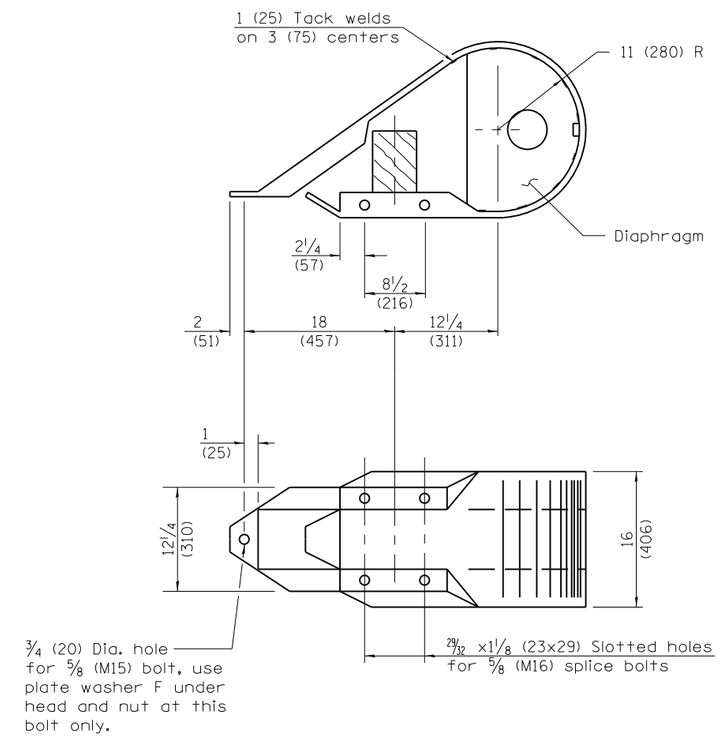

NOSE
(1 ea.)

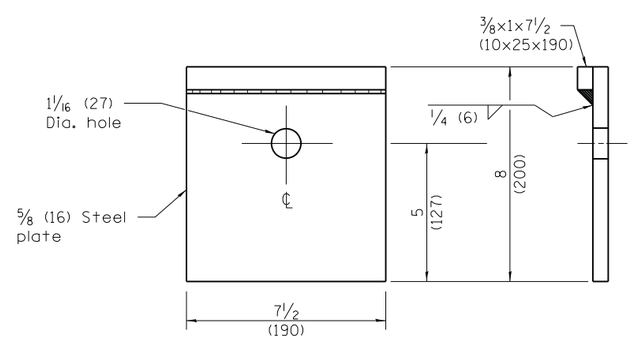

BEARING PLATE K
(1 ea.)

Illinois Department of Transportation

APPROVED January 1, 2012
ENGINEER OF LOCAL ROADS AND STREETS
APPROVED January 1, 2012
ENGINEER OF DESIGN AND ENVIRONMENT

ISSUED 1-1-08

TRAFFIC BARRIER TERMINAL TYPE 1

(Sheet 2 of 2)

STANDARD B.L.R. 23–4